APR 03 2001 (20) Sta. 15

ENGINEERING DATA TRANSMITTAL

1. EDT 621067

2. To: (Receiving Organization) FLUOR HANFORD	3. From: (Originating Organization) FLUOR FEDERAL SERVICES	4. Related EDT No.: N/A
5. Proj./Prog./Dept./Div.: HFFX0031 SNF A-13(b) 112755/AJ60	6. Design Authority/Design Agent/Cog. Engr.: CHRIS PETERSEN/JOHN GEUTHER	7. Purchase Order No.: N/A
8. Originator Remarks: Approval and release.		9. Equip./Component No.: N/A
		10. System/Bldg./Facility: 221-T
		12. Major Assm. Dwg. No.: N/A
11. Receiver Remarks: REFERENCE USQ SCREENING #T-01-020 3/21/01	11A. Design Baseline Document? ☒ Yes ☐ No	13. Permit/Permit Application No.: N/A
		14. Required Response Date: 3/15/01

15. DATA TRANSMITTED

(A) Item No.	(B) Document/Drawing No.	(C) Sheet No.	(D) Rev. No.	(E) Title or Description of Data Transmitted	(F) Approval Designator	(G) Reason for Transmittal	(H) Originator Disposition	(I) Receiver Disposition
1	HNF-7639	N/A	0	SLUDGE HANDLING SYSTEM	T	1	1	
				T PLANT UPGRADES				
				CONCEPTUAL DESIGN DOCUMENT				

16. KEY

Approval Designator (F)	Reason for Transmittal (G)		Disposition (H) & (I)	
E, S, Q, D OR N/A (See WHC-CM-3-5, Sec. 12.7)	1. Approval 2. Release 3. Information	4. Review 5. Post-Review 6. Dist. (Receipt Acknow. Required)	1. Approved 2. Approved w/comment 3. Disapproved w/comment	4. Reviewed no/comment 5. Reviewed w/comment 6. Receipt acknowledged

17. SIGNATURE/DISTRIBUTION (See Approval Designator for required signatures)

(G) Reason	(H) Disp.	(J) Name	(K) Signature	(L) Date	(M) MSIN	(G) Reason	(H) Disp.	(J) Name	(K) Signature	(L) Date	(M) MSIN
1	1	Design Authority W. J. GEUTHER	W J Geuther	3/21/01		1	1	W. S. AYERS		3/22/01	
1	1	Design Agent D. S. MCSHANE (2H)	DS McShane	3-20-01		1	1	C. A. PETERSEN (H)	CA Petersen	4/2/01	G1-23
		Cog. Eng. N/A (SAME AS DESIGN AUTHORITY)				1	1	E. G. ERPENBECK (2H)		4/2/01	G1-23
1	1	Cog. Mgr. D. LEVINSKAS		3/20/01		1	1	W. W. RUTHERFORD	W W Rutherford		G1-23
1	1	QA D. L. VANCE		3/22/01		1	1	R. R. AMES		3/23/01	T4-56
1	1	Safety J. A. LOCKLAIR	for JAL	3/23/01		3	6	E. DODD			
1	1	Env. B. M. BARNES	Brett M Barnes	3/21/01		3	6	J. W. VIITA (2H)			

18.	19.	20.	21. DOE APPROVAL (if required)
Dave McShane 3/20/01 Signature of EDT Originator — Date	Authorized Representative for Receiving Organization — Date	W John Geuther 3/21/01 Design Authority/ Cognizant Manager — Date	Ctrl No. ____ ☐ Approved ☒ Approved w/comments ☐ Disapproved w/comments

ENGINEERING DATA TRANSMITTAL

(CONTINUATION PAGE)

5. Proj./Prog./Dept.Div.:	6. Cog. Eng.	1. EDT	
SNF A-13(b)	CHRIS PETERSEN/JOHN GEUTHER	621067	Page 2 of 2

15. DATA TRANSMITTED					(F)	(G)	(H)	(I)
(A) Item No.	(B) Document/Drawing No.	(C) Sheet No.	(D) Rev. No.	SIGNATURE/DISTRIBUTION (CONTINUED)	Approval Designator	Reason for Transmittal	Originator Disposition	Receiver Disposition
				D. W. ANDREWS D.W. Andrews 3/21/01		1	1	
				J. R. KEENE J.R. Keene 3/22/01		1	1	
				S. D. ~~SCOTT~~ ELLIOTT 3/20/01 3/22/01		1	1	
				B. G. BAKER B.G. Baker 3/22/01		1	1	

BD-7400-173 (10/97)

DISTRIBUTION SHEET

To	From	Page 1 of 2
DISTRIBUTION	SLUDGE HANDLING SUBPROJECT	Date 3/23/01
Project Title/Work Order		EDT No. 621067
HNF-7639, Revision 0, Sludge Handling System T Plant Upgrades Conceptual Design Document, Project A-13(b)		ECN No.

Name	MSIN	Text With All Attach.	Text Only	Attach./ Appendix Only	EDT/ECN Only
Randy Ames	T4-56	X			
Eric Erpenbeck (3 Hard Copies)	G1-23	X			
Judy Pottmeyer (1-H)	G1-23	X			
John Payne	G1-23				X
Jack Mcgee	G1-23				X
Chris Peterson (1 Hard Copy)	G1-23	X			
Steve Peck	R3-86	X			
Ed Dodd (1-H)	S4-49	X			
Jim Keene	T3-28	X			
Bobby Baker	T3-28				X
John Geuther (1-H)	T3-28	X			
Dave Levinskas	T3-28	X			
Riney Wilbert	T3-35				X
Bill Ayers (1-H)	T3-28	X			
Wally Rutherford	G1-23	X			
Scott Elliot	T3-28				X
Wayne Gentry	T3-28				
Wayne Moore	T3-28				X
Mark Watkins	T3-20				X
Brett Barnes	T3-28				X
Eric Greager	T4-05				
Dave Andrews	T3-28	X			
Gary Moist	X3-85	X			
Dave Vance	T3-28	X			
John Locklair	T3-06	X			
Don Precechtel	X3-85				X
John JulyK	X3-85				X
Oscar Holgado	R3-81				X
Mike Collins	H0-12				X
Robin Bushore	T4-56				X
Dan Conners	T3-28	X			
Sandy Trine (1-H)	T3-28	X			

DISTRIBUTION SHEET

To	From	Page 2 of 2
DISTRIBUTION	SLUDGE HANDLING SUBPROJECT	Date 3/23/01
Project Title/Work Order		EDT No. 621067
HNF-7639, Revision 0, Sludge Handling System T Plant Upgrades Conceptual Design Document		ECN No.

Name	MSIN	Text With All Attach.	Text Only	Attach./ Appendix Only	EDT/ECN Only
D. S. McShane (3 Hard Copies)	B4-09	X			
J. W. Viita (2 Hard Copies)	B4-09	X			
Central Files	B1-07	x			
SNF Project A.13(b) Files					
Terra Wentz-DeLeon (1H)	H6-08	X			

A-6000-135 (10/97)

HNF-7639
Revision 0

Sludge Handling System Conceptual Design Document

Prepared for the U.S. Department of Energy
Assistant Secretary for Environmental Management

Project Hanford Management Contractor for the
U.S. Department of Energy under Contract DE-AC06-96RL13200
Fluor Hanford
P.O. Box 1000
Richland, Washington

Approved for public release; further dissemination unlimited

HNF-7639
Revision 0
EDT 621067

Sludge Handling System Conceptual Design Document

Project No: A-13(b) Document Type: ES Division: SNF

D. S. McShane
Fluor Federal Services

Date Published
April 2001

Prepared for the U.S. Department of Energy
Assistant Secretary for Environmental Management

Project Hanford Management Contractor for the
U.S. Department of Energy under Contract DE-AC06-96RL13200

Fluor Hanford
P.O. Box 1000
Richland, Washington

APR 03 2001
DATE:
STA: 15
HANFORD RELEASE
ID: 20

Release Approval Date 4-3-01

Release Stamp

Approved for public release; further dissemination unlimited

LEGAL DISCLAIMER

This report was prepared as an account of work sponsored by an agency of the United States Government. Neither the United States Government nor any agency thereof, nor any of their employees, nor any of their contractors, subcontractors or their employees, makes any warranty, express or implied, or assumes any legal liability or responsibility for the accuracy, completeness, or any third party's use or the results of such use of any information, apparatus, product, or process disclosed, or represents that its use would not infringe privately owned rights. Reference herein to any specific commercial product, process, or service by trade name, trademark, manufacturer, or otherwise, does not necessarily constitute or imply its endorsement, recommendation, or favoring by the United States Government or any agency thereof or its contractors or subcontractors. The views and opinions of authors expressed herein do not necessarily state or reflect those of the United States Government or any agency thereof.

This report has been reproduced from the best available copy.

Printed in the United States of America

Total Pages: ~~280~~ 258 yda

HNF-7639
Revision 0

CONCEPTUAL DESIGN DOCUMENT

SLUDGE HANDLING SYSTEM

MARCH 2001

Prepared by
Fluor Federal Services
for
Fluor Hanford

CONCEPTUAL DESIGN DOCUMENT

SLUDGE HANDLING SYSTEM

APPROVAL

Fluor Federal Services

Judith R. Zimmerman, Technical Editor — Date 3-21-01

David S. McShane, Project Engineer — Date 3-21-01

John W. Viita, Project Manager — Date 3-21-01

Fluor Hanford

Chris A. Petersen, Design Authority — Date 4/2/01

John J. Geuther, Design Authority — Date 3/21/01

Eric G. Erpenbeck, Project Engineer — Date 4/2/01

Wally W. Rutherford, Project Manager — Date 4/2/01

Sludge Handling System

Table of Contents

1.0 SUMMARY 1

2.0 INTRODUCTION 1
- 2.1 PURPOSE 1
- 2.2 BACKGROUND 2
- 2.3 PROJECT INTERFACES 3
  - 2.3.1 K Basins Interfaces 3
  - 2.3.2 T Plant Interfaces 3

3.0 JUSTIFICATION 5

4.0 DESCRIPTION OF PROJECT 5
- 4.1 CONTAINERS 6
  - 4.1.1 Type 1 Containers 6
  - 4.1.2 Type 2 Containers 6
  - 4.1.3 Type 2 Container Spacers 7
  - 4.1.4 Overpacks 7
- 4.2 INSTRUMENTATION AND CONTROLS 8
- 4.3 T PLANT PROCESS CELL UPGRADES (TYPE 1 CONTAINERS) 8
  - 4.3.1 Liner/Storage Racks 8
  - 4.3.2 Leak Detection and Removal System 9
  - 4.3.3 Lifting Devices 10
- 4.4 T PLANT POOL CELL UPGRADES (TYPE 2 CONTAINERS) 10
  - 4.4.1 Design Requirements 11
  - 4.4.2 Seismic Evaluation 11
  - 4.4.3 Liner/Storage Rack 11
  - 4.4.4 Leak Detection and Removal 12
  - 4.4.5 Water Treatment 13
  - 4.4.6 Miscellaneous Platforms and Structures 16
  - 4.4.7 Assembly Lifting Devices 17
- 4.5 FIRE PROTECTION UPGRADES 17
  - 4.5.1 271-T Building Fire Alarm System 17
  - 4.5.2 271-T Building Sprinkler System 17
  - 4.5.3 221-T Dry Riser System 18
  - 4.5.4 221-T Canyon Alarm System 19
- 4.6 MISCELLANEOUS SYSTEMS 20
  - 4.6.1 MCO Cask Purge System 20
  - 4.6.2 Container Lifting Devices 20
  - 4.6.3 Type 1 Container Water Fill System 21
  - 4.6.4 Canyon Camera Upgrades 21
  - 4.6.5 Stack Monitoring System 22

5.0 METHOD OF PERFORMANCE 22
5.1 CONTAINERS (WBS 2.0) 22
5.2 T PLANT UPGRADES (WBS 4.0) 22
5.2.1 Engineering (WBS 4.1) 22
5.2.2 Construction (WBS 4.3 and 4.4) 22
5.2.3 Acceptance Inspection (WBS 4.5) 23
5.2.4 Project Management (WBS 5.0) 23
5.3 OTHER PROJECT COSTS (WBS 2.4 AND 4.6) 23

6.0 REQUIREMENTS AND ASSESSMENTS 24
6.1 SAFEGUARDS AND SECURITY 24
6.1.1 Safeguards 24
6.1.2 Security 25
6.2 HEALTH AND SAFETY 25
6.2.1 Radiation Protection 25
6.2.2 Safety During Construction 26
6.3 DECONTAMINATION AND DECOMMISSIONING 27
6.4 MAINTENANCE AND OPERATIONS 27
6.5 AUTOMATIC DATA PROCESSING/TELECOMMUNICATIONS 27
6.6 QUALITY ASSURANCE REQUIREMENTS 27
6.7 ENVIRONMENTAL COMPLIANCE 28
6.7.1 Permits 28
6.7.2 National Environmental Policy Act (NEPA) 28
6.7.3 Storage 28
6.7.4 Waste Management 29
6.7.5 Pollution Prevention 30
6.7.6 Chemical Inventories 30
6.8 SAFETY ANALYSIS/CLASSIFICATION 30
6.9 UNCERTAINTIES AND CONTINGENCY 30
6.9.1 Off-Normal Conditions 30
6.9.2 Items Needing Further Evaluation 32
6.10 RISKS 32
6.11 ALARA PLAN 34
6.11.1 Design 34
6.11.2 Construction 35
6.11.3 Operations 35
6.11.4 Mockup Training 35
6.12 ENERGY CONSERVATION REPORT AND ANALYSIS 36
6.13 HANDICAPPED PROVISIONS 36
6.14 FALLOUT PROVISIONS 36

7.0 REFERENCES 36

APPENDICES
Appendix A. Work Breakdown Structure
Appendix B. Cost Estimate Summary

Appendix C. Project Schedule
Appendix D. Outline Specification
Appendix E. Plant Forces Work Review
Appendix F. Permitting Strategy
Appendix G. Preliminary Safety Equipment List
Appendix H. Baseline Design Criteria
Appendix I. Mechanical Flow Diagrams
Appendix J. Sketches

ACRONYMS AND ABBREVIATIONS

ALARA	As low as reasonably achievable
ANSI	American National Standards Institute
ASME	American Society of Mechanical Engineers
CDD	Conceptual Design Document
CFR	Code of Federal Regulations
DOE	U. S. Department of Energy
FH	Fluor Hanford
HEPA	High-efficiency particulate air (filter)
HVAC	Heating, ventilating, and air conditioning
KE Basin	K East Basin
KW Basin	K West Basin
MBA	Material balance area
MCO	Multi-canister overpack
NFPA	National Fire Protection Association
NEPA	National Environmental Policy Act
PC3	Performance Category 3
PCB	Polychlorinated biphenyl
P&ID	Piping and instrumentation diagram
QA	Quality Assurance
RCRA	Resource Conservation and Recovery Act
RFAR	Radio fire alarm recorder
RH-TRU	Remote-handled transuranic
RL	Richland Operations Office (DOE)
RLID	RL Implementing Directive
SARP	Safety analysis report for packaging
SHS	Sludge Handling System
SNF	Spent nuclear fuel
SNM	Special nuclear material
SRA	Security requirements analysis
TID	Tamper indicating device
TPC	Total project cost
TPA	Tri-Party Agreement (Hanford Federal Facility Agreement and Consent Order)
TSCA	Toxic Substance Control Act
WAC	Washington Administrative Code
WBS	Work breakdown structure
WM	Waste Management Project

CONCEPTUAL DESIGN DOCUMENT

SLUDGE HANDLING SYSTEM

1.0 SUMMARY

Spent nuclear fuel (SNF) has been stored underwater in the K Basins for more than 40 years. Over time, corrosion products from the degrading fuel rods, storage rack dust, concrete from pool walls, and environmental particulate have accumulated as sludge on the floors and in the pits of the K Basins. Additional sludge will be generated during the handling and cleaning of the SNF canisters during fuel removal from the basins. The sludge is not regulated as a dangerous or hazardous waste, but it does meet the definition of waste regulated under the Toxic Substance Control Act (TSCA).

This conceptual design document (CDD) presents the technical, cost, and schedule baselines for the Sludge Handling System (SHS), SNF Sub-Project A.13(b). The SHS provides for the design and procurement of sludge containers, container overpacks, the transportation of filled containers, and receipt and storage of the sludge at T Plant. The sludge will be stored at T Plant until the method for treatment and disposal of remote-handled transuranic (RH-TRU) waste is determined.

To optimize storage at T Plant, the sludge is divided into two streams. One stream is more reactive and will be stored under water. The second stream is less reactive and can be stored dry. Stainless steel vessels designed specially for this project will safely contain the sludge during transport and storage. The sludge containers will be transported to T Plant using the existing multi-canister overpack (MCO) cask and transporter.

Upgrades to T Plant will provide two types of storage for the sludge containers. The T Plant pool cell will be upgraded with equipment and systems to store the more reactive waste stream. Select process cells will be fitted with equipment to hold the less reactive waste stream. Both types of storage will be designed to meet TSCA requirements. As a best-management practice, reasonable Resource Conservation and Recovery Act (RCRA) requirements also will be met. The nuclear safety analysis also designates some of the systems as Safety Class. All systems that will receive, unload, and store the sludge containers at T Plant will be designed for remote operation to limit worker exposure.

This CDD validates that the SHS and components can be designed, fabricated, installed, tested, and verified ready for operation within the schedule and budget allotted.

2.0 INTRODUCTION

2.1 PURPOSE

This CDD establishes the cost and schedule baseline for the word required to complete the definitive design, procurement, and construction of the SHS at T Plant. The total project cost

(TPC) estimate and all activities necessary to provide a system ready to receive sludge are included in the estimate and schedule (Appendices B and C, respectively). Design requirements for this project were established in the *Baseline Design Criteria* (see Appendix H).

2.2 BACKGROUND

The KE and KW Basins were built in the early 1950's. They have been used to store N Reactor spent nuclear fuel (SNF) starting in 1975 at KE Basin, 1981 at KW Basin, and much earlier for single-pass reactor SNF. In 1992, the decision to deactivate the PUREX Plant left approximately

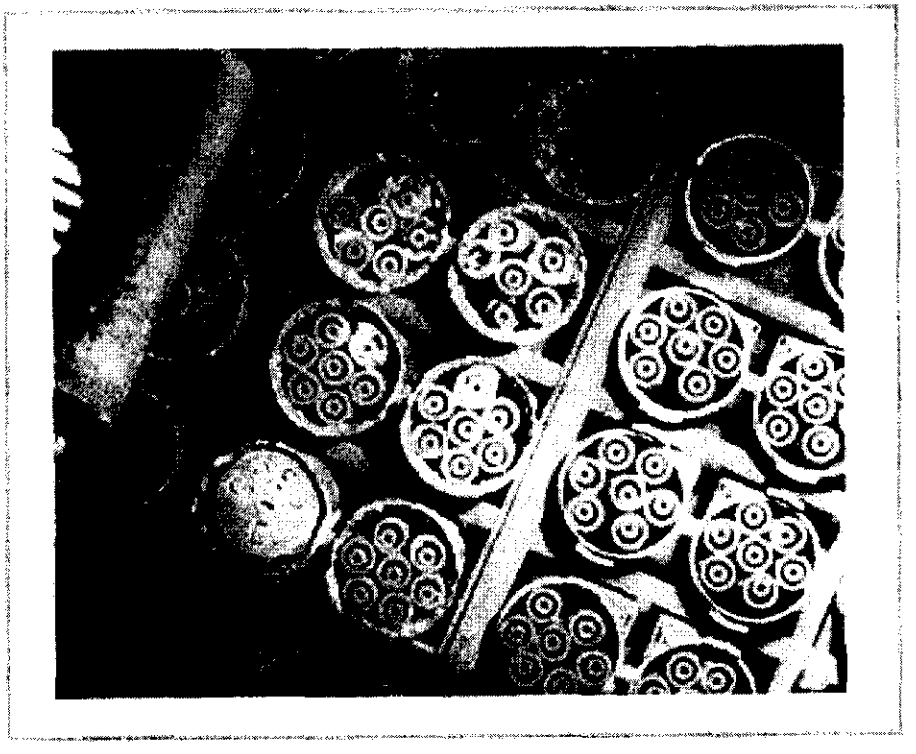

Figure 1. Spent Nuclear Fuel, Canisters, and Storage Racks in KE Basin

2100 metric tons of metal in the K Basins with no means for near-term processing. A significant fraction of SNF in the K Basins has become degraded due to cladding breaches during reactor discharge and continuing corrosion during underwater storage.

Fuel in the KE Basin is stored in open-top canisters. Some canisters have closed bottoms and others have screened bottoms (see Figure 1). The canisters release soluble fission products into the basin water and also allow fuel corrosion products to combine with canister rack rust, concrete dust, and environmental particulate matter, which settles on the basin bottom as a fine sludge. Sludge depths exceeding 3 ft have been measured in portions of the KE Basin.

The fuel in KW Basin is stored in closed stainless steel canisters. Some leakage has released soluble fission products into the basin water, but at much lower rates than at KE Basin.

Basin water and sludge may leak into the environment due to the age and condition of the basins. This potential hazard provides the impetus for removing the sludge from the basins as soon as possible. To differentiate SNF from sludge, any material less than or equal to 0.64 cm (0.25 in.) in diameter is defined as sludge. Upon removal from K Basins, sludge will be dispositioned as RH-TRU waste.

Sludge will be retrieved from K Basins and managed as two separate waste streams. One sludge stream will be comprised primarily of canister and fuel wash sludge that collects in the knockout pots and settler tanks during SNF retrieval and processing. This stream is expected to include a significant number of metallic uranium fuel fragments, which react with water generating heat and hydrogen, and fuel corrosion products. The estimated volume of this stream is between 3 m^3 and 7 m^3.

The second sludge stream will be comprised of the KE floor and pit sludge and KW north loadout pit sludge. This sludge consists of less reactive components: windblown sand and rocks, spalled concrete from the basin walls, iron and aluminum corrosion products, ion exchange resin beads, uranium oxides, and possibly, some uranium fuel particles. The estimated volume of this stream is between 47 m^3 and 62 m^3.

2.3 PROJECT INTERFACES

Sludge removal and handling from K Basins is divided into subproject A-13(a), Sludge Removal; and A-13(b), Sludge Handling. Figure 2 is a process flow diagram for the loadout, transportation, storage, and treatment of K Basins sludge. The double-lined boxes represent the subsystems that are included in the SHS.

2.3.1 K Basins Interfaces

The SHS interfaces with K Basins activities are as follows:

- Subproject A-13(a), Sludge Removal System, will provide for the design and construction of the system to fill the container with sludge.
- Canister Storage Building Operations supply the MCO cask transporter that will move the sludge containers to T Plant.

2.3.2 T Plant Interfaces

The SHS project interfaces with T Plant activities are as follows:

- The Deck Clean-off Project removes interferences from the T Plant canyon deck and process cells, freeing up space to install the Type 1 sludge container storage systems.
- The Shippingport Fuel Removal Project removes Shippingport PWR Core 2 fuel (PWR Core 2 fuel) from the pool cell where Type 2 sludge containers will be stored. This activity will also remove existing equipment used to store the PWR Core 2 fuel. Some of the new

equipment installed for PWR Core 2 fuel removal will be reused. This equipment is identified later in the CDD.

Figure 2. Process Flow Diagram for Sludge Loadout, Transportation, Storage, and Treatment

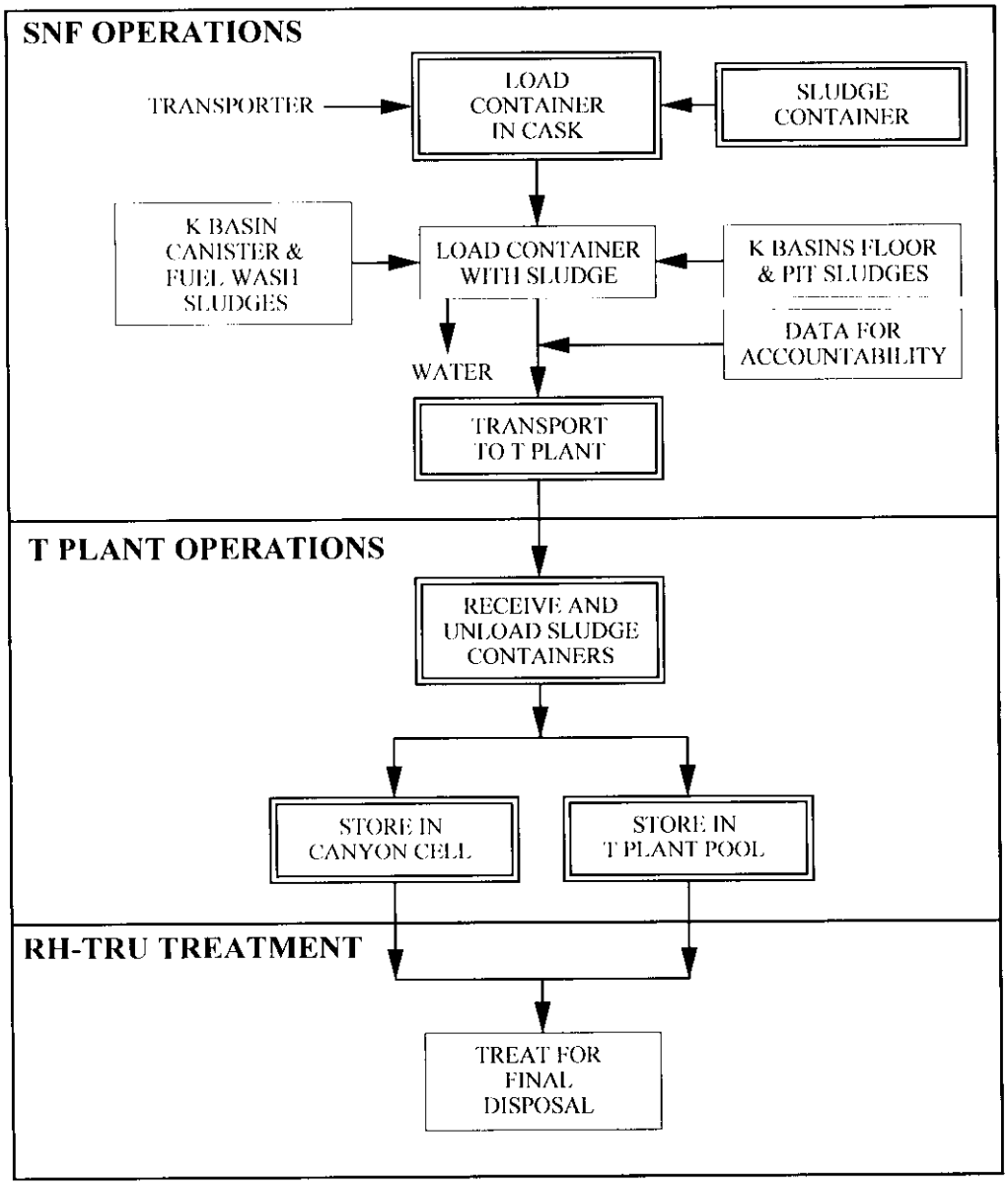

3.0 JUSTIFICATION

The SHS project will place K Basins sludge in interim safe storage until treatment and disposal plans for RH-TRU waste can be developed. Placing the K Basins sludge in safe interim storage will safeguard the sludge, protect the environment, and satisfy the following Tri-Party Agreement (TPA) milestones:

- Remove the containerized sludge from the K Basins on a schedule currently specified in the TPA Milestones M-34-08 and M-34-10.

- Meet the TPA Milestones associated with T Plant readiness to receive the containerized sludge (M-91-18, M-91-19-T01, M-91-20, M-91-21-T01, and M-91-22).

- Place the untreated sludge in interim storage at T Plant pending final treatment and disposal in accordance with TPA Milestone M-91 for RH-TRU waste.

4.0 DESCRIPTION OF PROJECT

The SHS project provides the equipment and facility upgrades necessary to transfer and store the K Basins sludge at T Plant. The SHS is divided into subsystems that include packaging, shipping, receiving, and storing K Basins sludge. Packaging is done using stainless steel containers specially designed to hold Type 1 and Type 2 sludge. Shipping the packaged sludge is accomplished using the existing MCO cask and transporter. Loading the empty sludge container will be done using a mobile crane at a location acceptable to K Basins operations. Options evaluated for loading empty containers into the MCO cask are identified an engineering report (McShane 2001).

Several other systems will be developed to receive, unload, and store the sludge containers at T Plant. These subsystems include the MCO cask purge system and special lifting devices that ensure containers can be moved safely and remotely from the shipping cask to the storage areas. The containers will be stored in the T Plant canyon cells in liner/storage racks that will safely store the sludge container until a treatment/disposal pathway is developed. The SHS project also includes upgrades to the T Plant fire protection system.

The conceptual process for moving the K Basin sludge to T Plant is shown in the mechanical flow diagrams in Appendix I.

This section discusses the following elements of the SHS:

- Containers for storing the sludge
- Instrumentation and controls
- T Plant process cell upgrade (Type 1 storage)
- T Plant pool cell upgrades (Type 2 storage)
- Fire protection upgrades at 221-T and 271-T Buildings
- Miscellaneous systems
  - Container lifting devices
  - MCO cask purge system

- Container water addition system
- Video camera monitoring
- Stack monitoring system

4.1 CONTAINERS

Sludge will be retrieved from the K Basins and managed as two separate waste streams. One sludge stream will be comprised of sludge from the KE Basin floor and pit and KW Basin north loadout pit. This sludge stream, referred to as Type 1 sludge, consist of less reactive components: windblown sand and rocks, spalled concrete from the basin walls, iron and aluminum corrosion products, ion exchange resin beads, uranium oxides, and possibly some uranium fuel particles. The second sludge stream, referred to as Type 2 sludge, will be comprised of the more reactive sludge that collects in the knockout pots and settler tanks during SNF retrieval and processing. The second stream also includes KW Basin floor and pit sludge, except for sludge in the north loadout pit.

4.1.1 Type 1 Containers

Type 1 containers store the less reactive sludge and can be stored dry. The containers are cylindrical, and sized to fit into an MCO cask. The container has a 23–in. inside diameter and is 147.5-in. tall, with a total volume of approximately 33 ft^3 (.93 m^3). When filled, 50% of the container is filled with sludge, 40% with water, and 10% is air or void space. Based on the bounding volume of sludge 2,190 ft^3 (62 m^3), the maximum number of Type 1 containers would be 133. Based on the nominal volume of sludge (1,337 ft^3 [37.9 m^3]), the expected number of Type 1 containers would be 81.

Type 1 containers are made from stainless steel using all welded construction. The container is equipped with two nozzles: a 2-in. and 1-½-in. During filling, the 2 in. nozzle is used to pump the sludge in, and the 1-½ -in. nozzle is used to vent the container. During storage, the 2-in. nozzle serves as a vent that prevents over pressurization, and the 1-½-in. nozzle is capped. The vent is equipped with a high-efficiency particulate air (HEPA) filter to prevent airborne radioactive material from escaping. Since the container has a 10% air volume at the top, plugging of the filter is not expected. During storage, the water in the container can evaporate. Keeping the sludge wet to facilitate future removal is desirable. A container water fill system is provided so water may be added if needed. The container water fill system is described briefly in section 4.6.3.

The welded lid construction and small nozzle penetrations, along with container weight and storage locations, comply with safeguards and security requirements and provide adequate protection of the sludge from theft. The containers have a lifting bail welded to the top, which allows the container to be handled remotely. Sketch ES-SHS-M100 shows the Type 1 container concept.

4.1.2 Type 2 Containers

Type 2 containers store the more reactive and radioactive sludge stream and will be stored underwater. This stream is expected to include a significant number of metallic uranium fuel

fragments, which react with water generating heat and hydrogen and fuel corrosion pieces. The container is cylindrical and the diameter is sized to ensure a geometrically safe configuration. The container has a 10-in. inside diameter and is 140-in. tall, with a total volume of approximately 6.36 ft^3 (0.18 m^3). When filled, 50% of the container is filled with sludge, 40% with water, and 10% is air or void space. Based on the bounding volume of sludge (265 ft^3 [7.0 m^3), the maximum number of Type 2 containers would be 79. Based on the nominal volume of sludge (1.77 ft^3 [4.05 m^3]), the expected number of Type 2 containers would be 45.

The containers are made from stainless steel using all welded construction. The container is equipped with two top nozzles: a 2-in. and 1-½-in. During filling, the 2-in. nozzle is used to pump the sludge in, and the 1-½-in. nozzle is used to vent the container. During storage, the 2-in. nozzle is the vent that prevents over pressurization, and the 1-½-in. nozzle is capped. The vent is a passive vent designed to keep the cooling water out and allows the container to vent when necessary.

The container is designed to protect from a hydrogen buildup under any crust that might develop on top of the sludge. A diagonal plate will be placed on the inside of the container in the area where crust might develop. If hydrogen should form under the crust, the pressure will force the crust up and the diagonal plate creates a hole to vent the hydrogen.

The welded lid construction and small nozzle penetrations, along with container weight and storage locations, comply with safeguards and security requirements and provide adequate protection of the sludge from theft. The containers have a lifting bail welded to the top, which allows the container to be handled remotely. The concept for Type 2 containers is shown in sketch ES-SHS-M200.

4.1.3 Type 2 Container Spacers

The Type 2 container outside diameter is much smaller than the inside diameter of the MCO cask used for shipping or the overpack used for storage in the event of a leak. A spacer is provided to prevent the Type 2 container from excessive movement when it is placed inside either the MCO cask or the overpack. The spacer is constructed from stainless steel. The Type 2 container spacer concept is shown in sketch ES-SHS-M300.

4.1.4 Overpacks

If either a Type 1 or Type 2 container leaks during storage, the container must be placed in an overpack container to prevent contamination from spreading. The overpack is designed to hold either type of container and has a specific storage location in the racks for the dry storage in the process cell.

It is assumed that Type 2 containers will be able to be stored dry in the overpack. The Type 2 containers will be built to ASME Section VIII, Division 1. The testing requirements for the container fabrication are sufficiently stringent that a defective container at the time of filling is not expected. In addition, upon arrival at T Plant, all containers will be tested, utilizing the helium purge system and leaking containers will not be accepted. If a Type 2 container leaks during storage, it is assumed that a minimum of 2 years has passed and that the sludge will not be

reactive enough to require underwater storage. If this cannot be demonstrated during definitive design, a different system will be considered.

The overpack is cylindrical, made from welded stainless steel, can be handled remotely, and is equipped with a removable lid that encloses the Type 1 or Type 2 container. The sealed overpack is vented to prevent over pressurization. Sketch ES-SHS-M400 shows the overpack container concept.

4.2 INSTRUMENTATION AND CONTROLS

Instrumentation and controls will be provided to enable reliable operation of equipment within the overall SHS. The control system philosophy is to use locally mounted instruments within the canyon areas with signal transmitters located in the piping or operating gallery. Controls will be remotely actuated and manually operated with the exception of some interlock functions that will be determined during definitive design. Refer to the preliminary piping and instrumentation diagrams (P&IDs), sketches ES-SHS-CS1 through ES-SHS-CS4. (All sketches are shown in Appendix J.)

A central control area will be located within room 218 of the operating gallery in the 221-T Building. The control area will contain an annunciator panel and a control panel. The annunciator panel will be a commercial, off-the-shelf unit configured to provide visual and aural alarm annunciation, alarm acknowledge, and test functions. The control panel will be designed to provide control and indication of equipment and operating conditions. The instrumentation and control philosophy is discussed further in an engineering report (DeLisle 2001).

The 221-T Building is equipped with three monitors to measure high radiation. The monitors are continuous airflow-type units that have local alarms only. The SHS will connect the units to the annunciator in room 218.

4.3 T PLANT PROCESS CELL UPGRADES (TYPE 1 CONTAINERS)

The process cells in T Plant will be used for dry storage of the Type 1 containers. Four cells are required to store the bounding volume of Type 1 sludge. The cells are approximately 13-ft wide by 17-ft long and 28-ft deep. The cells are built with removable cover blocks that will provide shielding from the radiation coming from the containers. It is assumed that the existing cover blocks are in good condition and will be reused. This assumption will be verified during the process cell cleanout activity. The system to store the Type 1 containers includes liner/storage racks, leak detection, and leak removal capability. Sketch ES-SHS-P1 shows the conceptual general arrangement of the process cell dry storage systems.

4.3.1 Liner/Storage Racks

Type 1 container sludge is designated as TSCA waste. This type of waste must be stored in an area that can supply secondary containment. The process cells, constructed around 1944, are reinforced concrete. The process cell was evaluated to confirm the structural adequacy of the concrete (Erpenbeck 2000a). The seismic analysis concludes that the process cell is structurally

adequate for storage of Type 1 sludge. However, the concrete alone cannot be shown to supply acceptable secondary containment.

An engineering study evaluated different types of liner systems and concluded that a freestanding metal liner is the preferred system (Haq 2001). The main driver for using a freestanding metal liner is that the high radiation levels in the process cells prevent workers from entering the cells. A freestanding liner will be fabricated outside the canyon area and installed remotely by the canyon crane operator. The volume requirements for the liner are based on TSCA, which requires the liner capacity to be equal to at least 25% of the total volume of the stored waste. The liner/storage rack assembly will not exceed the capacity of the T Plant canyon crane. To secure the liner and to prevent it from sliding, a base frame has been developed that can be installed, leveled, and braced remotely by the canyon crane operator.

Type 1 containers are required to be stored vertically and maintained at a minimum spacing of 25 in., measured center-to-center of the container (Erickson 2000). Metal storage racks will be used to provide this storage. The rack will integrate with the liner, making one unit. The concept selected uses a combination of stainless steel and epoxy-coated carbon steel to make the liner/storage rack assembly. Each liner/storage rack will hold 33 Type 1 containers. Two of the 33 locations are slightly larger to accommodate an overpack. Overpacks will only be loaded into the liner/rack if needed to store a leaky container. The liner/rack is designated as General Services in the Safety Equipment List (Appendix G). Sketches ES-SHS-S2 and ES-SHS-S4 show the concept for the liner/rack.

Sludge stored in the Type 1 container can produce hydrogen. The Type 1 containers are vented to prevent over pressurization, which allows the containers to vent hydrogen. The canyon ventilation system is designed to draw air from the canyon deck level down through the process cell and out through the stack. Hydrogen released from the containers into the process cell would be drawn into the ventilation system and vented out the stack, preventing a build up of hydrogen in the cell (Erpenbeck 2000b). The canyon ventilation system is designated as General Service in the Preliminary Safety Equipment List.

Based on the bounding volume of Type 1 sludge, four process cells will be required. Eight process cells are candidates for dry storage. The prime candidate cells are 3L, 3R, 11L, and 16R; backup cells are 10R, 12R, 15L, and 16L. Sketch ES-SHS-G1 shows the location of the prime and backup cells.

4.3.2 Leak Detection and Removal System

The leak detection and removal system consists of a leak detection assembly to detect the leak and a sump pump assembly to remove the leak. Both assemblies are stainless steel and can be installed remotely by the canyon crane.

The leak removal unit consists of an electrical driven submersible pump mounted on a stainless steel frame. Control for operating the leak removal units will be mounted on local instrument racks. Pump controls will include "on," "off," "status," and load current indication.

Leak detectors will use conductivity probes and be controlled on local instrument panels, adjacent to the process cell used, in the operating gallery. Leak detector alarm signals will be relayed to the annunciator panel in the central control area in room 218 of the operating gallery.

The leak detection and the sump pump assemblies require electrical connections. To get from the process cell to the gallery, existing penetrations will be used. These penetrations use a Hanford electrical head on the process cell side. The Hanford electrical connectors are remotely installed. To ensure operability for the next 30 years, the wiring from the heads to the gallery will be verified and replaced if necessary.

The local control panels require an electrical supply of 120 V, 20-amp service. The existing electrical supply located in the electrical gallery is adequate.

The process for the leak detection and removal system for the Type 1 container storage is as follows. When liquid collects in the secondary containment sump, the liquid detection system alarms, alerting plant operations personnel. They determine the source of the leak by weighing and visually inspecting each Type 1 container in the cell. Once the leaking container is identified, an overpack is placed in the storage rack and the leaking container is placed in the overpack.

The leak detection system is equipped with probes that can determine the amount of liquid in the sump. If the amount of liquid in the sump is small, absorbent material may be used to remove the liquid. If the amount of liquid collected in the sump is enough to pump, the sump pump assembly is installed and the leakage is pumped into the overpack with the leaking container. When the pump is used, the operator knows the leakage has been removed when the low-level alarm on the leak detector goes off. This system is designated General Services in the Preliminary Safety Equipment List. Sketches ES-SHS-S2 and ES-SHS-S3 show the concept for the leak detection and removal system.

4.3.3 Lifting Devices

The liner/rack will be designed for remote installation. This will require that special lifting devices (i.e., spreader bars) be provided. These devices will utilize the same basic configuration of the other hooks and bails currently in use at T Plant.

4.4 T Plant Pool Cell Upgrades (Type 2 Containers)

The pool cell (Cell 2R) at T Plant will be used to store the Type 2 sludge containers under water. The cell is 13-ft wide by 27-ft long and 28-ft deep. The system to store Type 2 containers includes liner/storage racks, leak detection and removal, water treatment, new cover blocks, and service platforms. Sketch ES-SHS-P2 shows the conceptual general arrangement of the pool cell storage.

4.4.1 Design Requirements

Design requirements for the storage system for Type 2 containers is driven by several sources. The waste is designated as TSCA waste. TSCA and RCRA requirements direct the use of secondary containment, leak detection, and leak removal. The preliminary gas and heat generation analysis of K Basins sludge stored at T Plant indicates that the Type 2 containers must be cooled (Erpenbeck 2000b) (also see Yorgesen et al. 2000). Therefore, the Type 2 containers will be stored under water. In a criticality analysis, Erickson (2000) states that the spacing of the containers must be maintained. The analysis also determined that the containers must be protected from a cover block drop. The storage racks are designated as Safety Class in the Preliminary Safety Equipment List.

4.4.2 Seismic Evaluation

The pool cell walls consist of two layers of concrete: a main structural layer and an inner layer of unreinforced concrete placed to make the cell watertight. Several seismic evaluations have been performed on the structure, beginning in 1994, with the most current analysis performed in 2001.

In the latest seismic analysis, Short et al. (2001) demonstrates that the pool cell can withstand an earthquake loading with the magnitude required for an existing Performance Category 3 (PC3), provided the hydrodynamic and hydrostatic loads are removed from the walls and that a new lighter and thinner cover be designed and installed over the pool cell. Reducing the thickness of the cover blocks from 6 ft to 2 ft will lower the weight of the cover blocks.

The latest analysis (Short et al. 2001) also assumes minor cracking in the inner layer of concrete as identified in Barlow (1994). During the project execution phase, pool wall cracking locations must be mapped to validate existing results demonstrating that the pool meets PC3 criteria.

4.4.3 Liner/Storage Rack

RCRA regulations dictate that container storage must provide secondary containment to protect the environment. Existing pool cell 2R has old, thick, concrete pool walls with construction joints that are not anticipated to provide compliant secondary containment over the 30-year design life without significant improvements. The seismic evaluation demonstrates that even with improvements, the concrete pool walls are not adequate to withstand the lateral loads imposed by the water required to cover the containers. These conditions were considered in an engineering study that evaluated different liner/storage rack systems (Haq 2001). The conclusion from the study was to use a freestanding metal liner/storage rack assembly. The freestanding liner/rack assembly will be integral, approximately 12-ft wide, 26-ft long, and 18-ft high, and will be able to hold 77 Type 2 containers in the existing T Plant pool cell. The liner will be high enough to maintain the cooling water at a level approximately 40 in. above the containers.

The liner/storage rack assembly is designated as Safety Class in the Preliminary Safety Equipment List, and will be designed and constructed to appropriated standards. This will ensure that the minimum spacing requirement (25 in. center to center) of the Type 2 containers is maintained and the containers are protected from large falling objects. The liner/storage rack assembly will be constructed from components that do not exceed the current capacity of the T Plant canyon crane. The liner assembly will be made from two liners. The inner liner and storage rack will be made from stainless steel and will provide containment of the cooling water. The outside liner will be made from carbon steel and will provide several functions that include:

- Ensure that the cooling water is maintained if the inner liner should leak.
- If a Type 2 container leaks, the RCRA requirement is that the leak should be detected and removed within 24 hours. In this situation, the outer liner acts as secondary containment and the inner liner as primary containment, allowing more time to remove the contamination from the cooling water and protect the environment.
- If the inner liner should leak, the outer liner will retain the cooling water and keep the hydrostatic loads from the concrete cell walls.
- The water in the cell also provides shielding. If the inner liner were to leak into the pool cell, the amount of shielding would decrease causing increased exposure to workers.

To eliminate rework of the pool cell, the liner cannot be attached to or restrained by the side walls of the pool cell. To keep the loads for the liner from the side walls, an analysis was performed to determine how far the liner could slide under PC3 earthquake loading (Erpenbeck 2000b). The analysis demonstrated that the liner should be placed no closer to the wall than 6 in.

Sludge stored in Type 2 containers can produce hydrogen. Type 2 containers are vented to prevent over-pressurization, which allows the container to vent hydrogen. The canyon ventilation system is designed to draw air from the canyon deck level down through the process cell and out through the stack. Hydrogen released from the containers into the pool cell would be drawn into the ventilation system and vented out the stack, preventing a buildup of hydrogen in the cell (Erpenbeck 2000b). The canyon ventilation system is designated as General Service in the Preliminary Safety Equipment List.

The liner/storage rack will be fabricated in a clean area to minimize installation time in the T Plant canyon. This will minimize costs and radiation exposure to the workers during construction. Sketches ES-SHS-S5 and ES-SHS-S6 show the conceptual design and placement of the pool cell liner/storage rack assembly.

4.4.4 Leak Detection and Removal

The leak detection and removal system consists of several elements: the liner, the water quality system (section 4.4.5.3), the water cleanup system (section 4.4.5.4), a leak detector assembly, and a leakage removal assembly.

Because the Type 2 containers are stored under water, detection and removal of leakage is difficult. To determine if a Type 2 container is leaking, a radiation monitor will be installed on the water quality system. Detection of radiation in the cooling water is an off-normal event and is discussed further in section 6.9.1.6. Removing the leakage (cleaning up the cooling water) within a short period of time is not possible. Therefore, the concept for the liner system includes an inner and outer liner.

Under normal operation, the Type 2 container is primary containment and the liner system is secondary containment. If the cooling water becomes contaminated, the inner liner acts as primary containment and the outer liner as secondary containment. With this configuration, the environment is protected while the contaminated cooling water is cleaned.

The liner system is equipped with a leak detector assembly and a leakage removal assembly designed for placement between the inner and outer liner. The leak detection assembly is stainless steel and can be remotely installed. Leak detectors will be conductivity probes and will be controlled on local instrument panels adjacent to the pool cell in the operating gallery. Leak alarm signals will be relayed to the annunciator panel in the central control area in room 218. The leak removal assembly consists of an electric-driven sump pump mounted on a remotely installed stainless steel frame.

Controls for operating the sump pump will be mounted on local instrument racks. Pump controls will include "on," "off," "status," and load current indication. If a leak is detected in the outer liner, the leakage will be pumped back into the inner liner. The operator knows the leakage has been removed when the low-level alarm on the leak detector goes off. This is an off-normal event and is discussed further in section 6.9.1.7. The leak detection and removal assemblies are designated as General Service equipment in the Preliminary Safety Equipment List. Sketches ES-SHS-S7 and S8 show the concepts for the leak detector and removal assemblies.

4.4.5 Water Treatment

The water treatment system is designed to provide water cooling, water addition, water testing for contaminants, and water cleaning if the water does get contaminated. The pumps and heat exchangers for the water treatment systems are designed to mount on a metal skid that can be fabricated outside the canyon area to minimize installation time in the T Plant canyon. Sketch ES-SHS-CS3 shows the preliminary P&IDs. Sketches ES-SHS-P2 and ES-SHS-P4 show the water treatment system.

4.4.5.1 Water Cooling

A cooling system is provided to prevent the pool water from becoming too hot. The design requirement for the cooling system is that it must remove at least 20,000 Btu/hr. The source of heat in the sludge comes from the radioactive decay heat and heat of reaction from oxidation of

uranium metal. The cooling water system is designated as General Services in the Preliminary Safety Equipment List. Pending final outcome of the safety evaluations, the cooling system is conservatively equipped with a redundant system. Options for providing a cooling system are discussed in MacLean (2001b). The recommended pool water cooling system consists of:

- Self-priming pool water recirculation pumps
- Stainless steel shell and tube heat exchanger
- A packaged water-chilling refrigeration system
- An inhibited cooling water make-up and surge tank
- An inhibited cooling water recirculation pump

Pumps for the water cooling system are stainless steel centrifical and self-priming. Heat exchangers are all stainless steel, single-pass, shell and tube units. Stainless steel will accumulate less contamination and be easier to decontaminate than carbon steel or copper alloys. The single-pass design is generally easier to decontaminate.

An industrial, water chiller refrigeration unit will satisfy the need for cooling the inhibited water. The chiller is air-cooled to avoid using raw water, which would generate additional waste. The warm air from the chiller will be discharged into the piping gallery. A standard centrifical pump will circulate inhibited water from a make-up and surge tank through the chiller and heat exchanger. Water for the cooling system will be supplied from the existing water addition system.

Controls for the system are located in the operating galley and in room 218. Electrical power is available and must be routed from the electrical gallery. The water cooling system is the only automatically controlled water treatment system. The cooling system requires automation because T Plant is not occupied continuously. When the water temperature reaches 75 °F, the cooling water system starts automatically and continues to operate until the pool water temperature returns to 70 °F where the system shuts down. If the main cooling system fails, the redundant system will start automatically.

4.4.5.2 Water Addition

The water addition system is existing and will provide demineralized (deionized) water to the storage pool, the chiller system, and the container water addition system (section 4.6.3). These systems use demineralized water to reduce corrosion and limit the growth of algae. The existing water addition system consists of three ion exchange tanks, one cartridge particulate filter, and piping and valving. Additional piping and valves are required to connect the existing system to the SHS.

The water addition system is operated manually. Valves and level indicators for the storage pool and the chiller system will be located in the operating gallery. Both systems will be equipped with "low level" alarms. When water is needed for these systems, the operator opens the valve allowing the system to fill. When the level gages indicate that the system is full, the operator closes the valve. How water is added to the container water addition system is discussed in section 4.6.3.

4.4.5.3 Water Quality

The water in the cooling pool continuously circulates to keep the water from stagnating and to monitor for radiation. An in-line radiation detector is used to monitor for radiation. The presence of radiation is an indication that a Type 2 container could be leaking. If radiation is detected, the pool water is sampled and analyzed to determine the source of the radiation. A leaking Type 2 container is an off-normal event (see section 6.9.1.6). The pool water is also sampled for salt concentration or pH that could deteriorate the Type 2 containers or the liner and for biological growth that could plug the filter systems and cloud the water.

Samples are taken manually from a port on the system. Testing parameters and frequency will be determined during definitive design. The recirculation and the ion exchange system share components (the components are discussed with the ion exchange system in the next section). The water quality system is designated General Services in the Preliminary Safety Equipment List.

4.4.5.4 Water Cleanup

There are two systems for cleaning or purifying the pool water. An ion exchange column is available to remove radionuclide ions and an existing filter system is available to remove suspended solid material that may accumulate in and on top of the pool water. The water cleanup systems are designated as General Services in the Preliminary Safety Equipment List.

The pump is a stainless steel centrifical pump that will supply 10 gpm at about 100 ft of head. The pump will run continuously with flow normally through the recirculation loop, so any accumulation of radioactivity in the pool water would be detected immediately.

When radiation is detected, an alarm condition will be indicated at the control area, room 218, and in the canyon. Then, an operator will manually switch the flow from the recirculation system to the ion exchange column. In the ion exchange column, water flows through a spray nozzle, down through an activated carbon bed, followed by two resin beds. The normal operating pressure for the ion exchange system is 40 psig, required mainly for operation of the spray nozzle. The ion exchange column is equipped with a pressure relief valve.

The filtration system will be operated manually. The system removes suspended solids and debris that accumulate over time from the storage pool water. The existing system will be reused and consists of a pump, a hurricane cartridge filter, a bag filter, pressure gages to indicate plugging of the filter, and valves. The pump is a self-priming centrifugal type. The hurricane filter separates coarse particles and debris by centrifugal action, sending a slurry of debris to the bag filter for removal from the water. The cartridge in the hurricane filter separates and captures the fine particulates that are too small to be separated by centrifugal action. Periodically, the cartridge must be replaced, and the bag must be emptied.

The filtration system will be mounted on the service plate form discussed in section 4.4.6.2.

4.4.5.5 Cover Blocks

The existing pool cell cover blocks will be replaced with lighter cover blocks as part of the upgrades necessary to seismically qualify the pool cell walls to meet PC3 earthquake requirements (see section 4.4.2). The cover blocks will consist of removable 2-ft thick concrete blocks over the east half. The concrete cover blocks will be designed to withstand a 5-ton drop impact load from 4 ft over a 5-ft by 9-ft area so material coming into the canyon can be moved over the top the pool cell.

The west end of the pool will be covered with metal grating platforms designed to withstand a live load of 100 psf. The new cover blocks are shown on sketch ES-SHS-S10, and the metal grating covers are shown on sketch ES-SHS-S11. Sketch ES-SHS-P2 shows how the cover blocks fit into the pool cell. The cover blocks and metal grating frames are designated as General Services in the Preliminary Safety Equipment List.

4.4.6 Miscellaneous Platforms and Structures

4.4.6.1 Cover Block Supports

The criticality analysis identifies that an accidental drop of the cover block onto Type 2 containers could cause a criticality (Erickson 2000). Because the seismic analysis (Short, et al. 2001) demonstrates that the cover blocks will not fall during a seismic event, given the functions listed in the report, the only other way a cover block could fall is while being moved. To protect the containers, a metal frame will be placed under the concrete cover block to prevent the cover block from impacting the containers.

Containers can be placed in storage with the frame installed. The liner/rack assembly will be designed to protect the containers from a drop of the cover block support, the metal grating pool covers, or the service platform. The cover block support frame is designed as Safety Class equipment in the Preliminary Safety Equipment List. The cover block support frame is shown on sketch ES-SHS-S9. Sketch ES-SHS-P2 shows how the cover blocks fit into the pool cell.

4.4.6.2 Service Platform

A service platform is needed to provide access to the top of the pool area and to support the water filter skid. The platform will have permanent access ladders and removable handrail for versatility. The platform will be designed to be set by the T Plant crane without requiring anchor bolts, which will allow the platform to be placed at any location over the pool cell. The design will also allow the metal grating covers to be in place over the platform. The radiation dose rate above the water was a primary consideration when determining if a platform could be used. Preliminary analyses indicate that the dose rate at the top of the cooling water over the sludge is .002 mR/hr with 40 in. of water over the containers. The service platform is designated as General Services in the Preliminary Safety Equipment List. The platform frame is shown in sketch ES-SHS-S12. Sketch ES-SHS-P2 shows how the cover blocks fit into the pool cell.

4.4.7 Assembly Lifting Devices

The liner/rack will be designed for remote installation. This will require that special lifting devices (e.g., spreader bars) be provided. These devices will utilize the same basic configuration of the other hooks and bails utilized in the T Plant canyon and are designated as General Service in the Preliminary Safety Equipment List.

4.5 FIRE PROTECTION UPGRADES

Fire protection improvements for T Plant include upgrades to the fire alarm system and a new automatic wet sprinkler system in the 271-T Building; and a new dry standpipe system, manual pull stations, fire alarm notification devices, and a fire detection system in 221-T Building. The fire protection systems shall be designed in accordance with, but not limited to, DOE Orders 6430.1A, 5480.7A, and 420.1; RLID 5480.7 and 420.1; NFPA standards 13, 70, 72, and 1221; and Hanford Site specific requirements.

4.5.1 271-T Building Fire Alarm System

The fire alarm system in the 271-T Building will be updated or replaced as follows:

- Provide zones for the water flow, manual pull station, and smoke and heat detection.
- Provide additional batteries to provide 60-hr standby with a 5-min. alarm capacity
- Route alarm points in the 221-T Building to the fire alarm system in the 271 T Building.
- Update, upgrade, or replace the radio fire alarm recorder (RFAR) box and related hardware, as required during the definitive design process.
- Perform an acceptance test in accordance with NFPA 72.

4.5.2 271-T Building Sprinkler System

The wet sprinkler system in the 271-T Building will be designed and installed as follows:

1. Water will be supplied from a connection to the 10-in. raw water line located at the south end of the piping gallery in the 221-T Building. A water-flow test is required to ensure that adequate water flow and water pressure are available.

2. There is an existing 3-in. raw water line connected to the 10-in. feel line without an isolation valve An isolation valve will be installed on this line.

3. The riser and control valve will be located near the 10-in. raw water line connection and sized in accordance with the hydraulic calculations. The size is expected to be 6 in.

4. The sprinkler system piping will be routed near the ceiling level of the 221-T Building pipe gallery and enter the 271-T Building through an existing fire-rated, sealed penetration. The pipe penetration will be resealed with a 2-hr fire-rated seal.

5. A 2-in. main drain with a sight glass will be provided. The drain will be routed to a safe location outside the building, which will require a core hole in the west wall of the 221-T Building. Other standard features of the riser, including an electrical bell, will be provided.

6. The sprinkler system for the 271-T Building will be designed in accordance with NFPA 13 for an Ordinary Hazard Group 2 occupancy and will include a 500-gpm hose stream allowance. Spacing of the sprinkler will not exceed 100 ft^2 per head and will use low temperature rated heads. Piping between the three floors and the basement will be routed through exiting penetrations or through the existing pipe chase. The building has approximately 7,700 ft^2 per floor. The layout of the sprinkler system will be in accordance with NFPA 13 and will include the following special features:

   a. Basement: sprinkler heads above and below the suspended ceiling which covers approximately 10% of area and above and below the duct running the length of the center of the building.

   b. First Floor: sprinkler heads only below the ceiling in the office areas located between fire-rated barriers (about 2/3 of the floor area), at ceiling level in the remaining part of the building, and above and below the heating, ventilating, and air conditioning (HVAC) duct running in the north quarter of the building. Supports for the duct are wood framing.

   c. Second Floor: at ceiling level and below the suspended ceiling (approximately 50% of the floor area). Two lines of heads will be provided under the edges of the wood frame supported transite HVAC duct. This HVAC duct runs about 2/3 of the floor length. In addition, sprinkler heads will be provided near the ceiling where the wood frame supported duct transitions from the transite to metal. Heads are required under the metal duct in areas where it is more than 4-ft wide.

   d. Third Floor: sprinkler protection will be provided above and below the suspended ceiling area which covers approximately 50% of the floor area, at ceiling level in the rest of the floor, and above and below the duct running the length of the center of the building.

   e. Sprinkler protection will be provided in the stairways and penthouse in accordance with NFPA 13.

   f. Sprinkler protection will be provided in the elevators and dumb waiter in accordance with NFPA 13 and ANSI/ASME 17.1.

   g. Sprinkler system will be tested in accordance with NFPA 13.

4.5.3 221-T Dry Riser System

The dry standpipe system provides an improved method for fighting fires in the 221-T Building canyon. The system will be designed and installed in accordance with NFPA 14 and the following requirement:

1. The connection for the fire truck will be located 3-ft above grade on the east side of the 221-T Building at the south end. The connection will have a shut-off valve and a 2-½-in. fire department connection.

2. The main header will be 4-in. pipe routed up the exterior wall to approximately 12 ft above the canyon deck. At this level, the header will be routed through a 6-in. diameter core bore to the inside of the canyon. Once inside the canyon, the header will be routed along the inside of the east wall at approximately 12 ft above the floor. Preliminary observations indicate that the 12-ft level has the least interference.

3. The 4-in. main header will be provided with tees and 2-½-in. downcomers near doors R-19, R-15, R-11, R-7, and R-3.

4. The 2-½-in. downcomers will be equipped with a valve and a double clapper port fire hose connection located approximately 3 ft above the floor level.

5. Pipe hanger will comply with NFPA 13 and 14.

6. Piping will be Schedule 40 galvanized pipe with flexible couplings, and gaskets that are resistant to the effects of radiation.

7. The system will be tested in accordance with NFPA 13 and 14.

4.5.4 221-T Canyon Alarm System

A complete fire detection system is needed in the 221-T Building. Smoke or heat detectors will be provided throughout the building except for the process cells, the pool cell, the tunnel, the head end, and the pipe trench. Fire detection will also be placed in the HVAC system. The fire detection and alarm system will be designed and installed in accordance with NFPA 72 and includes the following features:

1. Heat detectors with remote testing features will be installed in the canyon area. The heat detectors will be rate-compensated/fixed temperature unless an alternative is approved. Detectors will be installed with a maximum spacing of 30 ft in any direction (two rows spaced 30-ft apart).

2. Ionization type smoke detectors will be installed on the ceiling in the electrical, piping, and operating galleries. The smoke detectors will be installed with a maximum spacing of 30 ft (one row spaced 30 ft apart).

3. Ionization type smoke detectors will be installed in each stairway.

4. Ionization type smoke detectors will be installed in the HVAC system in the 10-ft^2 ducts, just prior to the HEPA filter housing. These detectors will comply with NFPA 91.

5. Manual pull stations will be provided at all emergency exit doors for the building.

6. Manual pull stations and detectors will be connected to the master fire alarm panel in the 271-T Building.

7. The master fire alarm panel in 271-T will be upgraded to include the new detectors and manual pull stations.

4.6 MISCELLANEOUS SYSTEMS

4.6.1 MCO Cask Purge System

When the MCO cask transporter with a loaded container is shipped to T Plant, the airspace of the MCO cask is filled with helium. Prior to removing the MCO cask lid in the T Plant tunnel, the air space is purged again to remove any hydrogen that may have generated during transport. The helium that comes out of the MCO cask during the purge is checked for radiation to verify that a container has not leaked. The MCO cask purge system consists of the following equipment:

- Helium supply (provided by an earlier project)
- Flow meter
- Pressure indicator
- Radiation monitor
- Flow totalizer
- 1/2-in. stainless steel tubing, valves, and supports (partially existing).
- Flexible hose to connect to the MCO cask.
- HEPA filters

The supply of helium comes from high-pressure bottles. The existing helium bottles, storage rack, manifold, and regulator are located in the 214-T Building, and the 1/2-in. stainless steel tubing and control valves that connect the supply bottles with the east end of the T Plant tunnel are also in place. New equipment will be installed on the wall in the east end of the tunnel, mounted on framing channels and connected to the existing supply line.

The cask purge system will be provided with local instruments to indicate purge gas (helium) flow, pressure, radiation in stream, and totalized flow. The radiation monitoring system will provide local visual and aural alarms. Radiation alarms will be relayed to the central control area annunciator panel in room 218. HEPA filters are installed to keep instrumentation clean for maintenance. An engineering study detailed evaluation of the MCO cask purge system (MacLean 2001b). This system is designated as General Services in the Preliminary Safety Equipment List. Sketches ES-SHS-CS2 and ES-SHS-P3 show more details.

4.6.2 Container Lifting Devices

4.6.2.1 Load Cell

Containers full of sludge weigh approximately 5,000 lb. The containers must be lifted out of the MCO cask and placed in the appropriate storage rack. It is possible that the container could get wedged in the MCO cask. To ensure that the lifting equipment and containers are not damaged

by this condition, a load cell is placed between the T Plant 10-ton crane hook and the container. The capacity of the load cell is 10,000 lb with an accuracy of ± 50 lb.

The load cell has an electronic transmitter that relays the measured weight to the crane cab and the control area in the operation gallery in section 18. The electronic equipment in the crane cab and section 18 is existing. The load cell must be compatible with the existing equipment. The load cell is equipped with a bail on the top that can be engaged by the 10-ton canyon crane hook without assistance to the crane operator. The hook on the load cell is configured such that container or other lift devices can be engaged without any assistance to the crane operator. Alternatives reviewed for the load cell are documented in an engineering study (Bielicki 2000). The load cell is designated as General Services in the Preliminary Safety Equipment List. Sketch ES-SHS-M1 shows the configuration of the load cell.

4.6.2.2 Extension Hooks

Type 2 containers are stored under water. To keep the load cell hook out of the water, an extension hook will be provided. This extension hook will have the same bail and hook configuration as the load cell and be 4 to 5 ft long. A second extension hook will be supplied for use in loading the empty containers into the MCO cask. The extension hook is designated as General Services in the Preliminary Safety Equipment List. Sketch ES-SHS-M2 shows the configuration of the extension hook.

4.6.3 Type 1 Container Water Fill System

The Type 1 container is vented to prevent over pressurization, which means that the water in the container will evaporate over time. The water level in the Type 1 containers is monitored by measuring the weight of the stored containers. The initial weight of the full container is measured and recorded when the container is placed into storage. Periodically the containers are reweighed and the difference from the initial weight represents the water that has evaporated. The weighing is remotely performed using a load cell hooked on the crane. Once a predetermined amount of water has evaporated, make-up water will be added to the container. The amount allowed to evaporate before adding water will be determined during definitive design. Containers will be filled while located in the storage rack.

The water fill system consists of an open top vessel and a mechanical valve that can remotely add water to the Type 1 container. The outlet on the bottom of the vessel is offset to aid the crane operator with insertion into the container. The container nozzle will open the mechanical valve when the vessel is inserted. Deionized water from the water addition system is used to fill the open top vessel (see section 4.4.5.2). The vessel is filled manually while suspended from the canyon crane. The container water addition system is designated as General Services in the Preliminary Safety Equipment List. Sketch ES-SHS-M3 shows the container water addition system.

4.6.4 Canyon Camera Upgrades

Video cameras will provide remote surveillance of Type 1 containers in storage. When the cover blocks are removed, cameras attached to the canyon crane perform the surveillance. Two additional

jacks will be located adjacent to the storage cells where portable cameras could be plugged in. The portable cameras have been procured by another project. Control of the cameras will be from room 218 in the operating gallery where existing monitors and recording equipment will be used.

An existing camera installed on the canyon crane will be replaced with a camera that will provide better viewing of the canyon process cells. Additional lighting, if necessary, will also be added to ensure visibility to the bottom of the process cell. All new video equipment will be compatible with the existing video equipment. There are no new electrical power requirements for this activity. The video camera system is designated as General Services in the Preliminary Safety Equipment List.

4.6.5 Stack Monitoring System

To support K Basins sludge storage, the T Plant main stack, 291-T-1, will have to be reclassified from a minor stack to a major stack. The existing stack monitoring system is sufficient, however the system is disassembled at the present time. To make the existing system functional, a new alpha monitor is required and the existing beta monitor will be reinstalled. Both monitors are continuous air monitors. The existing stack probes and sampling system can be reused. The alarms for the stack will be local and in room 218 of the operating gallery. Recording equipment will be installed in room 218 of the operating gallery. This system is designated as General Services in the Preliminary Safety Equipment List.

5.0 METHOD OF PERFORMANCE

The methods of performance format is consistent with the work breakdown structure (WBS) in Appendix A. The WBS organizes the major phases of the T Plant upgrades that will be accomplished, i.e., containers, engineering, construction, and project management.

5.1 CONTAINERS (WBS 2.0)

The sludge containers, spacers, and overpacks will be obtained using a performance contract. The contract will include design, fabrication, and delivery to the site. This contract will be awarded and administered by Fluor Hanford.

5.2 T PLANT UPGRADES (WBS 4.0)

5.2.1 Engineering (WBS 4.1)

The contracted architect-engineer (A/E) will provide definitive design and engineering support during construction throughout the life of the project.

5.2.2 Construction (WBS 4.3 and 4.4)

The design and construction of the fire protection sprinkler system upgrades for the 271-T Building (WBS 4.4.3.1.2) will be performed by a fixed-price contractor who will provide the resources necessary to accomplish the task. The fixed-price contractor will be managed by the onsite construction contractor.

The following equipment and fabricated items will be procured by the construction contractor under fixed-price contracts for installation by onsite construction forces.

- Liners and support racks for Type 1 containers (WBS 4.4.1.1)
- Liner and support rack for Type 2 containers (WBS 4.4.2.1)
- New cover blocks, pool platforms, water-conditioning skid, and protective frames (WBS 4.4.2.6.1)
- Load cell and hook extension (WBS 4.5.4)

The onsite construction contractor will perform the remaining construction activities, including installation of the fabricated items identified. This includes purchasing all remaining material and equipment needed to implement the T Plant upgrades for the SHS project.

5.2.3 Acceptance Inspection (WBS 4.5)

Fluor Hanford will perform acceptance inspection and, if required, arrange for the Independent Integrity Assessment components installed that required a RCRA permit.

5.2.4 Project Management (WBS 5.0)

Fluor Hanford will negotiate performance measures with DOE and manage and integrate scope, cost, and schedule through the life of the project.

5.3 Other Project Costs (WBS 2.4 and 4.6)

Fluor Hanford will direct the resources necessary to perform the project facility support activities needed to implement the SHS T Plant upgrades. These activities include:

- Manage the conceptual phase of the project, which includes generating the baseline design criteria and a CDD.

- Obtain design input and reviews from cognizant T Plant personnel for design and procurement.

- Provide cognizant T Plant personnel to generate and coordinate project-permitting actions.

- Provide construction support from facility personnel not dedicated to the project, such as plant engineering, T Plant planning, operations, radiological control technicians, maintenance, safety, quality, environmental, Hanford patrol, and the Hanford fire department.

- Provide facility support for system acceptance testing and startup. Other than project management/team support, the project will not fund the generation of procedures, personnel training, operational testing, and readiness review. These costs will be funded through the facility budget. A facility SHS readiness estimate is shown in Appendix B.

- Provide for the development of environmental and safety documentation.

6.0 REQUIREMENTS AND ASSESSMENTS

6.1 SAFEGUARDS AND SECURITY

Upon exiting K Basins, the sludge will be classified as RH-TRU waste (Loscoe, 1999). The sludge will be safeguards Category IV and the Attractiveness Level may be either E or D, depending on the measured Pu content of each particular container (see DOE M-474.1-1). The SHS project, A.13(a), is responsible for the measurement of the Pu content of the sludge prior to the sludge exiting K Basins. Acceptance of the sludge into the T Plant Material Balance Area (MBA) will not require a separate Pu measurement.

6.1.1 Safeguards

The T Plant MBA 271 is currently Category IV with physical security appropriate to that category. Based on the results of the T Plant sludge security requirements analysis (SRA) and discussions with DOE, MBA 271 will be permitted to retain Category III Attractiveness Level D material without the additional security measures associated with a "limited area." However, should Category II quantities of Pu be reached, MBA 271 would be required to meet the requirements of a "limited area." If MBA 271 remains a Category IV MBA, the following safeguards requirements shall be met.

1. All individual sludge containers received by the SHS from the sludge removal system shall have an acceptable measured accountability value as determined by the Hanford Site measurement control representative. Development of the methodology to use for this measurement is the responsibility of the shipping MBAs located in the K Basins. Safeguards must approve the measurement method and its application (how many, where, and when samples are taken, acceptable measurement variance, etc.).

2. Tamper indicating devices (TIDs) will not be placed on each container of sludge shipped to T Plant. The alternative method for making each container inherently tamper-proof by welding the container lid will be used. This method is currently being reviewed by RL.

3. Each container will be uniquely identified. This identifier must be observable and readable when stored at the K Basins or T Plant. Under DOE M-474.1-1, the sludge meets the conditions for classification as retained waste.

4. Periodic physical inventories for this MBA will be performed every 2 years. There is a possibility that the inventory frequency may be extended beyond the 2-year requirement. The methodology as to how the inventory will be conducted will be established at a later date. However, special inventories may also be necessary to address anomalous conditions, i.e., off-normal events, change of custodians, etc. An inventory of the material will be necessary before the material is shipped off site or processed.

5. Physical movement of the sludge to T Plant will constitute an internal transfer. As irradiated special nuclear material (SNM), only a transfer check consisting of verification of the shipping container item count and verification of container identification will be required. The material will not require a receiving measurement. The transfer check by the receiving

custodian at T Plant must be completed within one day of receiving the shipment. Transfers must be documented on a Nuclear Material Item Transfer form, which will then be sent to Protection Technology Hanford Safeguards for data entry into the Hanford accountability computer and reporting to the national nuclear material accountability system.

6. Procedure revisions will be required to address the change in material received and stored at the T Plant.

7. Physical protection measures appropriate for Category IV material will be implemented. Per DOE Order 5632.1C-1, Category IV *"material shall be in a locked area when not in use."* Additionally, per DOE RLID 473.1, a Category IV MBA requires "*industrial-grade standard pin-tumbler lock and key, automated access control device, administrative controls, or a combination of these methods,*" for access control.

8. Personnel require no clearance for unescorted access to Category IV material, unless otherwise specified by a site vulnerability assessment. This generally occurs only in exceptional situations.

If the quantity of all Attractiveness Level D material remains under 16 kg of Pu, the MBA will remain at Category IV and no additional action is anticipated. If the 16 kg limit on Level D material containers is exceeded, additional protection and administrative measures associated with the creation of a "limited area" may be necessary but are not within the scope of this CDD.

6.1.2 Security

T Plant is a limited access facility. Guards positioned at barricades maintain security on the Hanford Site. Provisions will be taken to ensure that the sludge containers are not altered during storage (e.g., welded container lids, limited personnel access into the canyon).

If material with Attractiveness Level D is received, locked gates/doors shall be required during off-shift hours, and administrative access controls shall be required on shift. Locks shall employ an industrial grade pin and tumbler or an automatic access control device.

6.2 HEALTH AND SAFETY

6.2.1 Radiation Protection

Personnel radiation protection both during construction and operations is provided through the use of engineering controls, remote operations, and the Site radiation protection program.

6.2.1.1 Construction

Installation in the process cells primarily is performed remotely. The expectation is that no worker will be on the canyon deck when the cover blocks to the process cells are removed. Only a minimal amount of work will be performed in the canyon and it will be done only when the cover blocks are in place. Work in the process cell cannot begin without verification that the cell

is empty. Work in the pool cell cannot be performed until the Shippingport fuel is removed and the pool is drained and cleared of existing equipment. Radiological surveys will be conducted prior to performing the work to determine the hazards and mitigative actions for worker protection.

6.2.1.2 Operations

- Container Receipt and Storage

  Placement of Type 1 and Type 2 containers into storage from the MCO cask primarily is performed remotely. The canyon crane operator performs the majority of the operation from the shielded crane cab. The only activity that is not performed by the canyon crane operator is the removal of the bolts from the MCO cask lid, which is performed manually. This activity is short and the MCO cask shields the worker from the radiological dose from the containers. Once the bolts are removed, workers leave the area prior to removal of the MCO cask lid (Appendix I).

- Type 1 Containers

  During normal operations, the concrete cover blocks on the process cells provide shielding for the Type 1 containers. When the cover blocks are removed, the systems used to load or monitor or add water to the containers are designed for remote operation.

- Type 2 Containers

  During normal operations, the cooling water provides shielding. A preliminary calculation demonstrates that with 40 in. of water above the containers, the dose rate is estimated to be 0.002mR/hr. There is a potential for radiation streams in the 6-in. space between the liner/rack and the cell wall. This will be evaluated during definitive design. For the conceptual design, resources have been added to the estimate to provide shielding for the streaming effect. The process of loading new containers in the pool cell is performed remotely.

- Container Removal for Treatment

  Eventually, the Type 1 and Type 2 containers will be removed from storage for treatment. The location and type of treatment has not been determined. The same systems for moving the containers into storage will be used to move the containers out of storage. The systems are operated remotely for protection of the workers from radiation.

6.2.2 Safety During Construction

During construction, contractors will be required to take all reasonable precautions to protect the health and safety of workers. All construction will be performed in accordance with the requirements of Code of Federal Regulations 29 CFR 1926. The work is subject to 48 CFR 952.250-70, *Nuclear Hazards Indemnity Agreement*. This requirement will be flowed down to all subtier subcontractors and suppliers.

An ISMS Clause Flow Down Prescreening Question form will be completed for the work. The clause will be included in statements of work handed down to contractors, as appropriate. An evaluation will be determined whether or not full ISMS requirements will be warranted for the work as described in RPP-MD-111, *Guidance for Flow Down ISMS Requirements to Lower Tier Subcontracts*.

6.3 DECONTAMINATION AND DECOMMISSIONING

The SHS will be designed to simplify decontamination and decommissioning. The liner/storage rack assemblies and containers will be made from stainless steel and carbon steel, coated with special protective coating for easy decontamination. However, decontaminating equipment will be difficult since no new liquids are permitted in the T Plant canyon. All the equipment is designed to be installed remotely and therefore can be retrieved remotely.

6.4 MAINTENANCE AND OPERATIONS

Equipment located in high radiation areas are designed for remote removal so maintenance can be performed in lower dose areas. All other equipment is designed to be removable for ease of maintenance. T-Plant does not have equipment to perform maintenance remotely on installed equipment.

6.5 AUTOMATIC DATA PROCESSING/TELECOMMUNICATIONS

No new data automatic data processing or telecommunications are needed for this project.

6.6 QUALITY ASSURANCE REQUIREMENTS

Project activities for all contractors involved in design, procurement, construction, and acceptance will be governed, as applicable, by the requirements of 10 CFR 830.120 A, *Quality Assurance*.

Quality Assurance (QA) requirements are applied to items and activities using a graded approach as defined in HNF-PRO-259, *Graded Quality Assurance;* and HNF-PRO-704, *Hazards and Accident Analysis Process*. The SNF project has established SNF-4948, *SNF Project Quality Assurance Program Plan*, which is applicable to this SNF subproject. The project will interface with HNF-SD-WM-QAPP-036, *Waste Management Quality Assurance Program Plan*, during design activities affecting operations or modifications within T Plant. Project contractor participants, including subcontractors and vendors, are required to implement QA programs commensurate with contract document requirements. DOE Office of Civilian Radioactive Waste Management (OCRWM) requirements do not apply to the handling of K Basins sludge.

The specific technical and quality programmatic requirements and the requirements for material certifications, qualification/certification of personnel, inspections, examinations/testing, and applicable quality assurance records will be established during definitive design and included in the design documents.

6.7 ENVIRONMENTAL COMPLIANCE

Environmental activities should be an integral and visible part of the work planning and execution process at all stages of a project to ensure the protection of workers, the public, and the environment. Compliance with applicable environmental requirements is evaluated and communicated throughout the project life cycle.

Verification of environmental compliance and environmental requirements is achieved through developing checklists to:

- Determine environmental concerns and hazards.
- Identify appropriate requirements during the scoping phase of the project.
- Develop compliance matrices to ensure that requirements are appropriately addressed during design.
- Perform assessments throughout the process (including readiness assessments prior to the start of operations).
- Conduct inspections and monitoring once the facilities are constructed.

6.7.1 Permits

Fluor Hanford will prepare all required permit applications for DOE submittal. Environmental reviews, permits, and approvals will be considered and formalized prior to construction and/or operation of the facilities included within this project. A Notice of Construction for radioactive air emissions will be prepared for approval by the Washington State Department of Health and the EPA. A new source review will be prepared and documented to file in accordance with Washington Administrative Code WAC 173-460. Construction activities, including long-lead procurements, will not proceed without all required approvals or permission from regulatory agencies. The project permitting strategy is detailed in Appendix F.

6.7.2 National Environmental Policy Act (NEPA)

Federal agencies are required to assess the potential environmental impacts associated with government projects. DOE has prepared a draft Environmental Assessment for K Basins sludge storage at the 221-T Building (DOE/EA-1369) which will be released in the near future for public review.

6.7.3 Storage

Storage and disposal of polychlorinated biphenyls (PCBs) at concentrations of 50 ppm or greater are regulated by the TSCA and requirements of 40 CFR 761.65. Storage requirements applicable to Hanford are found in 40 CFR 761(a), (b), and (c). Subsections (d), (e), (f), (g), (h), and (j) of 40 CFR 761.65 apply only to commercial storers. As discussed in DOE's TSCA Informational

Brief, *PCB Manifesting, Tracking, and Disposal Requirements* (EH-231-001/1190), DOE facilities receiving waste from other DOE facilities are considered to be receiving the waste from a "related company" and therefore are not considered as commercial storers of PCB waste. Subsection (k) specifies that subsections (f) and (g) do not apply to federal facilities, and subsection (i) is specific to laboratories.

Specific storage requirements for onsite storage of TSCA regulated PCB waste are found in 40 CFR 761.65(b). Owners or operators of any facility used for the storage of PCB waste designated for disposal shall ensure that the facility has:

- Secondary containment compliant with the final status containment requirements of 40 CFR 264.175.
- Adequate roof and walls to prevent rain water from reaching the stored PCBs.
- Adequate floor that has continuous curbing to provide a containment volume of 25 percent of the total internal volume of PCB containers stored.
- No drain valves, floor drains, expansion joints, sewer lines, or other openings that would permit liquids to flow from the curbed area.
- Floors and curbing constructed of Portland cement, concrete, or a continuous, smooth, nonporous surface that prevents or minimizes penetration of PCBs.
- A site location above the 100-year flood water elevation.

PCBs designated for disposal may not be stored in a storage unit other than one meeting the design requirements discussed above unless the unit is:

- Permitted under RCRA, Section 3004
- Qualified for interim status under RCRA, Section 3005
- Permitted under RCRA, Section 3006
- Approved/regulated pursuant to a state PCB waste management program
- Subject to a TSCA coordinated approval
- Approved as a TSCA PCB waste management unit

Radioactive PCB waste is exempt from the 1-year storage limit specified in 40 CFR 761.65, provided a written record documenting all continuing attempts to secure disposal is maintained and available for inspection, and the waste is managed in accordance with applicable federal, state, and local laws and regulations governing management of radioactive material.

6.7.4 Waste Management

Waste will be managed in accordance with applicable federal, state, and local laws, regulations, and requirements. A waste management plan will be developed prior to starting work. The plan will identify waste minimization methods to be used; types and quantities of waste to be

generated, a list of qualified waste handlers (as appropriate), and a discussion of how construction debris and waste materials will be managed effectively during work activities.

6.7.5 Pollution Prevention

Waste minimization and pollution prevention will be addressed during definitive design to ensure that appropriate measures are taken to reduce projected waste streams and to modify systems, as appropriate, to accomplish pollution prevention objectives. Where feasible, processes will be streamlined to provide for more efficient operation and less waste generation, and hazardous materials will be replaced with nonhazardous or less hazardous substitutes. The definitive design will specifically address source reduction and system modification to minimize waste and prevent pollution.

6.7.6 Chemical Inventories

Information needed to comply with the emergency planning, notification, and reporting requirements of the Emergency Planning and Community Right to Know Act, Sections 302, 304, 311, 312 and 314; Section 6607 of the Pollution Prevention Act; and Section 3-302 of Executive Order 12856 will be provided, as appropriate, during construction as well as operation.

6.8 SAFETY ANALYSIS/CLASSIFICATION

Fluor Hanford will prepare a Safety Assessment to allow the receipt and storage of K Basins sludge at T Plant. The Safety Assessment will address those facility modifications and sludge receipt and storage activities identified as outside the scope of the current safety authorization basis. The Safety Assessment will be provided as an addendum to the T Plant safety authorization basis until it can be incorporated into the T Plant Interim Safety Basis (Bushore 2000) or the Solid Waste Facilities Master Safety Analysis Report (in preparation).

The preliminary safety designation for components of the SHS is shown in the Preliminary Safety Equipment List in Appendix G.

6.9 UNCERTAINTIES AND CONTINGENCY

6.9.1 Off-Normal Conditions

6.9.1.1 Traffic accident - The MCO cask and the sludge containers are designed to withstand traffic accidents. The safety analysis report for packaging (SARP) reviews the potential accidents in more detail.

6.9.1.2 Radiation in the helium purge – This would indicate that the container has leaked during transport. This condition requires rejection of the container and shipment back to the generator.

6.9.1.3 Container stuck in the MCO cask – The T Plant canyon crane is equipped with a load cell that transmits the weight that the crane is picking up. When a container is lifted,

the lifting operations will cease if the container weight is 5% higher than expected. If this occurs, a recovery plan would be developed.

6.9.1.4 Container dropped while moving from the MCO cask to storage – The container is designed with a large factor of safety in the lifting device. The crane is load-tested regularly. The hook is designed to ensure that the connection to the bail on the container is solid. These efforts reduce the possibility of a container drop. A recovery plan will be developed if a container is dropped.

6.9.1.5 Leak is detected in the Type 1 liner/rack – This indicates a potential leak in a Type 1 container. The solution to this condition is as follows:

- Remove the cover blocks.
- Pick up containers verifying weight and visually inspect for leaks with video cameras. The weight is verified by using the load cell to measure and comparing the measured weight to the original weight and the expected loss of water due to evaporation.
- Install overpack in the liner/rack.
- Move leaking container to overpack
- Remove the leaked material from the liner sump. A recovery plan would be developed. The quantity of the leaked material determines the method used to remove the Type 1 material. The SHS provides a remotely operated sump pump if the quantity is large.
- Replace cover blocks.

6.9.1.6 Contamination found in the cooling water for the Type 2 containers – This indicates a potential leak in the Type 2 container. The recovery action is as follows:

- Begin the ion exchange system to clean up the water.
- Remove all cover blocks.
- Lift each container to check for visible leakage or corrosion and weight loss. The weight is verified by using the load cell to measure and comparing the measured weight to the original weight.
- Once the leaking container is located, remove the cover block from a process cell with Type 1 container storage with an open space for an overpack.
- Install the overpack.
- Move the leaking container to the overpack.

- Replace all cover blocks.
- Continue ion exchange system until water is clean.

6.9.1.7 Water is detected in the outside liner of the Type 2 liner/storage rack – This is an indication that the inside liner is leaking. The permanent solution to this condition is significant and will be determined in a recovery plan. The short-term solution is to install the sump pump and recycle the water back into the main pool.

6.9.1.8 The primary cooling system fails – The SHS provides redundant cooling systems that use air-cooled chillers. The system is equipped with interlocks that start the backup system automatically.

6.9.1.9 Failure of the water addition system – Once the system is filled, it is expected that the need for make-up water from the water addition system will be rare. If the water addition system should fail, there will be time to repair or replace this simple system. If an emergency for water develops, water could be brought in through the tunnel using a tanker.

6.9.1.10 Crane failure while moving a container – This condition does not include a cable break (see section 6.9.1.4) and is unlikely since the crane receives regular maintenance. A crane failure could happen if a power failure occurs, in which case the operation would continue when power was restored. If the crane develops other mechanical problems, it would be repaired before operation could continue.

6.9.2 Items Needing Further Evaluation

Several seismic evaluations of the pool cell were performed to determine the condition of the pool cell (Erpenbeck 2000a and Short et al 2001). The latest evaluation calls for an additional survey of the cracks in the concrete on the inside of the pool to validate the assumption used in the evaluation. This survey has to be made after the PWR Core 2 fuel has been removed and the water in the pool drained. If radiation levels in the pool are too high, remote methods may have to be used.

The sludge is designated as TSCA waste. Further evaluation of this designation needs to be developed and agreement with regulating agencies obtained.

6.10 Risks

The risks identified in this section represent the significant risks to the project.

6.10.1.1 If the process cells are not adequately cleaned out, the base frame placement would be affected and could require additional clean out from the SHS project. The estimate and schedule would be affected by this additional scope.

6.10.1.2 The project expects to use the Hanford electrical heads in the process cells. Funds have been allocated to repair the wiring. If this cannot be done, an alternate method of connecting the leak detector and pump would have to be found. This would affect the estimate and schedule.

6.10.1.3 The T Plant canyon deck clean up and process cell clean out projects must clean enough process cells and deck area to complete the SHS. The PWR Core 2 fuel removal project must be complete before the pool cell will be available. If any of these activities are delayed, the SHS project will be impacted, affecting the schedule and estimate.

6.10.1.4 Construction of this project is dependent upon access to the T Plant canyon. The construction estimate and schedule are based on relatively uninhibited access to the canyon for Type 1 storage modifications. The construction estimate and schedule for the Type 2 storage modifications are based on access to the canyon 4 days a week. Deviation from this planning will impact the estimate and schedule.

6.10.1.5 The construction activities in the canyon are totally dependent on the canyon crane. If the crane is not available or is de-rated from the current lifting capacities, the project will be affected. This would impact the schedule and the estimate.

6.10.1.6 For the conceptual design, the bounding volume of Type 1 sludge is 62 m^3. When comparing this to the sludge capacity of the Type 1 container (.465 m^3), the number of containers required is 133. The total number of containers that can be stored in four Type 1 liner/racks is 132 (section 4.3.1). This difference is acceptable for conceptual design. It is expected that the upper bounding volume will be reduced as the design develops.

6.10.1.7 For the conceptual design the bounding volume of Type 2 sludge is 7.0 m^3. When comparing this to the sludge capacity of the Type 2 containers (.09 m^3), the number of container required is 78. The number of containers that can be stored in the Type 2 liner/rack is 77 (section 4.4.1). This difference is acceptable for conceptual design. It is expected that the upper bounding volume will be reduced as the design develops.

6.10.1.8 The number of overpacks is selected based on 5% of the maximum number of Type 1 containers per the design criteria (Appendix H). The number of overpacks will be reviewed and finalized during definitive design. The risk is that additional overpack containers and storage locations would be needed. Both risks are covered in contingency.

6.10.1.9 The safety classification has a big impact on the cost of equipment and systems. The Preliminary Safety Equipment List identifies the safety class designation for all SHS components and is based on preliminary Hazard and Criticality Analysis. The Hazard and Criticality Analysis will be finalized during definitive design. Changes to the Preliminary Safety Equipment List can result in changes to the cost of equipment.

6.10.1.10 The T Plant MBA is designated as a Category IV D. If the level of Pu in the sludge increases to where the MBA is designated as a "limited area," costs would increase. The increase would not affect construction costs since construction will be complete prior to the shipment of Type 2 sludge. However, operational costs would increase due to the higher level of clearance required and additional requirements for access to the facility. An "L" clearance would be required for a limited access area.

6.10.1.11 Cracks in the pool cell concrete are a risk. The conceptual design accounts for this risk by including money to examine the concrete for cracks and the conceptual design for the liner/rack provides protection from the concrete falling. (See sketch ES-SHS-S9.)

6.10.1.12 Permitting to RCRA instead of TSCA is risk. The conceptual design accounts for the risk by designing to RCRA requirement. The permitting process for RCRA could take longer and have an impact on the facility.

6.10.1.13 The only seismic upgrades anticipated for the T Plant canyon are the lighter cover blocks and the elimination of the hydrostatic and hydrodynamic loads on the pool cell walls. Additional upgrades will impact the cost and schedule.

6.11 ALARA PLAN

Planning to ensure that worker and general public exposures to radiation and radioactive materials are kept as low as reasonably achievable (ALARA) will be included in the design, construction, operation, and decommissioning of the SHS.

6.11.1 Design

The goal of the SHS design team is to provide equipment and processes that can be constructed, operated, and maintained with minimal radiation exposure to the worker. Examples of this philosophy are:

- The depth of the water over the Type 2 containers is so the dose rate from the sludge is 0.002mR/hr. This is far less than the background levels in the canyon.
- The liner/rack system for the Type 1 and Type 2 containers is designed such that fabrication can be performed in clean areas and installation can be performed without workers in the canyon area. Type 1 and Type 2 containers can be loaded into the storage area without workers in the canyon.
- Surveillance of the containers during storage is performed using video cameras to minimize the need for workers to be in the canyon area when the cover blocks are removed.
- Pump assemblies for leak removal are designed for remote installation if needed. Until needed, the assemblies can be stored in a clean area where regular maintenance can be performed.

- Leak detection systems can be installed and removed remotely for maintenance or replacement.

- To avoid radiation exposure to the workers, instrument readouts and pump controls will be available outside the canyon in the operating gallery or in the control area, room 218.

6.11.2 Construction

ALARA principles will be implemented during the construction phase by performing as much fabrication out of the canyon area as possible. Using modular equipment, installation time will be reduced. To reduce installation time more, mockups of the equipment will be made so the craft can practice installation techniques. The mockup training is discussed in section 6.11.4.

6.11.3 Operations

To limit worker exposure during normal operations, the following considerations were made. The cover blocks over the process cells (Type 1 storage) are 6-ft thick and will be installed when workers are in the canyon. Type 2 containers are stored under water and have sufficient cover to reduce the exposure to .002 mR/hr. The systems required to receive, store, monitor, and maintain the sludge containers are designed to be operated remotely. Mockup training will test and perfect the methods for installing and operating the systems.

6.11.4 Mockup Training

Since the installation of the equipment is done remotely and to implement ALARA practices, mockup training will verify the fit of the equipment and train the installation and operations personnel. The mockup training will be performed in a clean area equipped with an adequate overhead crane. Facilities such as the 272-W and 277-W Fabrication Shops or the 305 Building would be acceptable for training purposes.

The mockups will test the following construction and operation steps:

- Placement of base framing, including setting and moving leveling and alignment bolts
- Placement of liner/rack assembly
- Placement of Type 1 containers
- Placement of leak detection system
- Placement of sump pump system
- Placement of overpacks
- Placement of Type 1 container in the overpack
- Placement of Type 2 container in the overpack
- Placement of lid on the overpack
- Testing leak detection system
- Testing sump pump system

To accomplish a mockup that reflects T Plant canyon conditions, scaffolding will be used to create an opening the size of the process cell. The opening will not be as deep as the canyon cell due to the height limitation, but will require the use of cameras to perform the work. The video camera system in the canyon will be temporarily installed on the crane to simulate remote handling in the canyon. The inside of the scaffold will be covered with black plastic to simulate the work to be performed, with the camera system simulating the remote work in the field.

6.12 ENERGY CONSERVATION REPORT AND ANALYSIS

Not applicable for this project.

6.13 HANDICAPPED PROVISIONS

Not applicable for this project.

6.14 FALLOUT PROVISIONS

Not applicable for this project.

7.0 REFERENCES

Barlow, D. E. April 1994. *PWR Core II Storage Pool Structural Seismic Qualification–T Plant.* WHC-SD-WM-SA-023, Rev. 0. Westinghouse Hanford Company, Richland, WA.

Bielicki, B. E. March 2001a. *Sludge Handling System T Plant Upgrades Load Cell Study.* HNF 7632, Rev. 0. Fluor Federal Services, Richland, WA.

Bielicki, B. E. March 2001b. *Sludge Handling System T Plant Upgrades Leak Removal System.* HNF 7634, Rev. 0. Fluor Federal Services, Richland, WA.

Bushore, R. P. June 2000. *Interim Safety Basis for Solid Waste Facilities (T Plant), HNF-SD-WM-ISB-006, Rev. 1B.* Fluor Hanford, Richland, WA.

DeLisle, J. V. March 2001. *Sludge Handling System T Plant Upgrades Instrumentation and Control System.* HNF 7637, Rev. 0. Fluor Federal Services, Richland, WA.

Erickson, D. G. 2000. *Preliminary Criticality Study for K Basin Sludge Containers at T Plant.* HNF-6435, Rev. 0. Fluor Federal Services, Richland, WA.

Erpenbeck, E. G. 2000a. *Structural Evaluation of the T Plant 221-T Building for Interim Storage of K Basin Sludge.* HNF-6033, Rev. 0. Fluor Hanford, Inc., Richland, WA.

Erpenbeck, E. G. 2000b. *Gas and Heat Generation Analysis of K Basin Sludge for Storage at T Plant.* HNF-6704, Rev. 0. Fluor Hanford, Inc., Richland, WA.

Erpenbeck, E. G. 2000c. *Structural Design Concepts for Seismic Upgrades to the 221-T Pool.* HNF-7150, Rev. 0. Fluor Hanford, Inc., Richland, WA.

Haq, M. A. March 2001, *Sludge Handling System T Plant Upgrades Liner and Storage Racks.* HNF 7635, Rev. 0. Fluor Federal Services, Richland, WA.

Loscoe, P. G. 1999. *Contract No. DE-AC06-96RL13200 – K Basins Sludge Classification*, Letter 00-SFO-043, Department of Energy, Richland Operations Office, to R. D. Hanson, Fluor Daniel Hanford, Richland, WA.

MacLean, G. T. March 2001a. *Sludge Handling System T Plant Upgrades Multi-Canister Overpack Cask Purging System*, HNF 7633, Rev. 0. Fluor Federal Services, Richland, WA.

MacLean, G. T. March 2001b. *Sludge Handling System T Plant Upgrades Water Conditioning System.* HNF 7636, Rev. 0. Fluor Federal Services, Richland, WA.

McShane, D.S. March 2001. *Sludge Handling System T Plant Upgrades Empty Container Loading Study.* HNF-7638, Rev. 0. Fluor Federal Services, Richland, WA.

Short, S. A., E. G. Erpenbeck, and W. J. Geuther. 2001. *Seismic Failure Mode Evaluation for the Building 221-T, Section 2, Pool.* HNF-7692, Rev. 0. Fluor Hanford, Richland, WA.

Yorgesen, J. B., E. G. Erpenbeck, W. J. Geuther, and K.L. Pearce. October 2000. *Supplemental Analysis of Gas and Heat Generation of K Basin Sludge During Storage in T Plant.* HNF-7172, Rev. 0. Richland, WA.

APPENDIX A

WORK BREAKDOWN STRUCTURE

Sludge Handling System

Work Breakdown Structure

2.0 CONTAINERS (FIXED PRICE CONTRACT – FH)

- 2.1 Type 1 Containers
  - Design, Fabrication and Delivery of 132 Type 1 Sludge Containers
- 2.2 Type 2 Containers
  - Design, Fabrication and Delivery of 78 Type 2 Sludge Containers
  - Cask and Overpack Spacers for 6 Type 2 Containers
- 2.3 Container Overpacks
  - Design, Fabrication and Delivery of 8 Container Overpacks
- 2.4 Other Project Costs

3.0

4.0 T-PLANT UPGRADES

- 4.1 Engineering (A/E)
  - 4.1.1 Definitive Design
    - 4.1.1.1 Type 1 Container Storage
    - 4.1.1.2 Type 2 Container Storage including liner, rack, water system and cover blocks
    - 4.1.1.3 Instrumentation and Electrical
    - 4.1.1.4 Load Cell and Hook Extension
    - 4.1.1.5 Helium System Modifications
    - 4.1.1.6 Fire Protection Upgrades
    - 4.1.1.7 Water Addition System
  - 4.1.2 Title III Engineering
    - 4.1.2.1 Engineering during Construction
    - 4.1.2.2 Crack survey of Pool Wall
- 4.2 Not Used
- 4.3 Construction Management (FFS)
  - Contract placement, award and management of any construction subcontracts utilized in performance of the project
- 4.4 Construction
  - 4.4.1 Cell Upgrades for Type 1 Containers
    - 4.4.1.1 Liners and Support Racks (Subcontract)
      - Fabrication and Delivery of Sludge Container support racks, containment liners, and anchoring framework
    - 4.4.1.2 Cell Modification and Liner/Rack Installation
      1. Mock-up and testing
      2. Install support frames
      3. Install anchoring for support frames
      4. Install containment liners and Sludge Container support racks
      5. Plug Cell Drain
    - 4.4.1.3 Leak Detection and Removal System

1 Leak Detection and Alarms for Containment Liners
2 Installation of permanent portion of Liquid Removal System
3 Functional Testing

4.4.2 Pool Upgrades for Type 2 Containers

4.4.2.1 Liner(s) and Support Rack (Subcontract)
- Fabrication and Delivery of Sludge Container support rack, containment liner, and anchoring framework

4.4.2.2 Not Used

4.4.2.3 Pool Modification
1 Mock-up and testing
2 Install containment liner and Sludge Container support rack

4.4.2.4 Water Monitoring and Conditioning System
1 Particulate removal (skimmer) system
2 Water addition and cooling system
3 Ion-exchange system
4 Wet Pool Platform-Lower Level

4.4.2.5 Container Leak Detection System
- Pool radiation detection and alarms

4.4.2.6 New Cover Blocks and Pool Platforms
1 Fabrication of new cover blocks and platforms for Pool (Subcontract)
2 Installation of new cover blocks and platforms
3 Installation of Protective Frame (Cover Block Catcher)

4.4.2.7 Dry Liner Leak Detection and Removal
1 Leak Detection and Alarm for Second Liner
2 Installation of permanent portion of Liquid Removal System
3 Functional testing

4.4.2.8 Old Cover Block Removal

4.4.3 Fire Protection Upgrades

4.4.3.1 271-T Building sprinkler system
1 Fabrication and installation of water feed line from 271-T Building to water tie-in
2 Fabrication and installation of sprinkler system within the building (Subcontract)

4.4.3.2 221-T Canyon Dry Standpipe system
- Fabrication and installation of dry standpipe system the length of the 221-T Canyon

4.4.3.3 221-T Canyon alarms
- Installation of fire detection and alarm system for 221-T Canyon

4.4.4 Not Used

4.4.5 Other Upgrades

4.4.5.1 Helium Purge system modifications

4.4.5.2 Operations Monitoring (Camera) Modifications

4.4.5.3 Water Addition System
- Fabrication and Installation of equipment for water addition to Type 1 Containers

4.4.5.4 Crane Load Cell Modifications
1 Load Cell and Hooks Fabrication and Delivery
2 Storage Racks Fabrication and Installation
4.4.5.5 Stack Monitors
4.4.5.6 Radiation Monitors
4.5 Title III Acceptance Inspection (FH)
4.6 Other Project Costs (FH)

5.0 PROJECT MANAGEMENT (FH)

APPENDIX B

COST ESTIMATE SUMMARY

Project Estimate .....B-1 through B-17

Facility Support Estimate.....B-18
(Provided by Fluor Hanford)

FLUOR FEDERAL SERVICES, INC.
FLUOR HANFORD
JOB NO. 65400258-C0-16
FILE NO. Z811BAA3

** IEST - INTERACTIVE ESTIMATING **
SLUDGE HANDLING SYSTEM - T PLANT
CONCEPTUAL ESTIMATE
DOE_R01 - PROJECT COST SUMMARY

DATE 03/29/01 13:47:52
BY BAG

COST CODE	DESCRIPTION	ESCALATED TOTAL COST	CONTINGENCY %	CONTINGENCY TOTAL	TOTAL DOLLARS
000	ENGINEERING	4,170,000	14	580,000	4,750,000
501	BUILDINGS	1,190,000	25	300,000	1,490,000
700	SPECIAL EQUIP/PROCESS SYSTEMS	26,850,000	16	4,310,000	31,160,000
	(ADJUSTED/ROUNDED)	-10,000		+10,000	0
TOTAL PROJECT COST (TPC)		32,200,000	16	5,200,000	37,400,000

TYPE OF ESTIMATE: CONCEPTUAL ESTIMATE MARCH 29, 2001

LEAD ESTIMATOR: B.A.GILKESON B.A. Gilkeson ESTIMATING MANAGER: G.D.CHADWICK G. Chadwick 3/29/01

PROJECT MANAGER: J.W.VIITA J.W. Viita

for CLIENT: W.W.RUTHERFORD Chris A. Petersen 3/29/01

REMARKS:

(ROUNDED/ADJUSTED TO THE NEAREST " 10,000 / 100,000 " - PERCENTAGES NOT RECALCULATED TO REFLECT ROUNDING)

WBS	DESCRIPTION	DIRECT SUBTOTAL	INDIRECTS	SUB TOTAL	ESCALATION %	ESCALATION TOTAL	SUB TOTAL	CONTINGENCY %	CONTINGENCY TOTAL	TOTAL DOLLARS
210000	TYPE 1 CONTAINERS	3399000	676401	4075401	4.64	189098	4264499	15	639674	4904174
220000	TYPE 2 CONTAINERS	2161890	430216	2592106	5.94	153971	2746077	15	411911	3157988
230000	CONTAINER OVERPACKS	329000	65471	394471	3.57	14082	408553	15	61283	469836
240010	OTHER PROJECT COSTS FY01	375418	74708	450126	0.00	0	450126	0	0	450126
240020	OTHER PROJECT COSTS FY02	383174	76251	459425	2.55	11715	471140	15	70671	541812
240030	OTHER PROJECT COSTS FY03	418987	83378	502365	5.07	25469	527835	15	79175	607010
SUBTOTAL 2	CONTAINERS (FP CONTRACT)	7067469	1406426	8473895	4.65	394337	8868232	14	1262716	10130948
411100	TYPE1 CONTAINER STORAGE -DESIGN	164249	31824	196073	0.00	0	196073	15	29410	225484
411200	TYPE2 CONT STORAGE & EQUIP DESIGN	355553	68876	424429	1.95	8276	432706	15	64905	497612
411300	RADIATION MONITORING SYSTEM DESIGN	6151	1189	7340	1.95	143	7483	15	1122	8606
411400	LOAD CELL DESIGN	11290	2187	13477	0.00	0	13477	15	2021	15499
411500	HELIUM SYSTEM MODS DESIGN	28735	5564	34299	0.00	0	34299	15	5144	39444
411600	FIRE PROTECTION UPGRADES DESIGN	110251	21322	131573	1.54	2026	133599	15	20039	153639
411700	WATER ADDITION SYSTEM DESIGN	16039	3105	19144	2.35	449	19594	15	2939	22533
411800	VIDEO CAMERA SYSTEM UPGRADES DESIGN	13458	2603	16061	0.00	0	16061	15	2409	18470
411900	STACK MONITORING DESIGN	15430	2985	18415	1.95	359	18774	15	2816	21590
411A00	GENERAL ENGINEERING TASKS - TYPE 1	88010	17045	105055	0.00	0	105055	15	15758	120813
411B00	GENERAL ENGINEERING TASKS - TYPE 2	66633	12899	79532	1.95	1550	81083	15	12162	93246
411C00	ENGINEERING SUPPORT TYPE 1 STORAGE	342831	66599	409430	0.00	0	409430	15	61414	470845
411D00	ENGINEERING SUPPORT TYPE 2 STORAGE	249020	48294	297314	1.95	5797	303112	15	45466	348579
SUBTOTAL 411	DEFINITIVE DESIGN	1467650	284498	1752148	1.06	18603	1770752	15	265612	2036364
412100	ENGINEERING DURING CONSTRUCTION	685454	132864	818318	3.57	29213	847532	15	127129	974662
412200	CRACK SURVEY ENGINEERING ANALYSIS	53613	18253	71866	3.57	2565	74431	40	29772	104204
SUBTOTAL 412	TITLE III ENGINEERING	739067	151117	890184	3.57	31779	921964	17	156902	1078866
SUBTOTAL 41	ENGINEERING (A/E)	2206717	435616	2642333	1.91	50382	2692716	16	422515	3115231
430000	CONSTRUCTION MANAGEMENT (FFS)	1165827	405718	1571545	3.78	59404	1630950	15	244642	1875592
SUBTOTAL 43	CONSTRUCTION MANAGEMENT (FF	1165827	405718	1571545	3.78	59404	1630950	15	244642	1875592
441100	CONTAINER RACK/LINER ASSY	173745	59278	233023	2.54	5927	238950	19	44337	283287

FLUOR FEDERAL SERVICES, INC.
FLUOR HANFORD
JOB NO. 65400258-C0-16
FILE NO. Z811BAA3

** IEST - INTERACTIVE ESTIMATING **
SLUDGE HANDLING SYSTEM - T PLANT
CONCEPTUAL ESTIMATE
DOE_R02 - WORK BREAKDOWN STRUCTURE SUMMARY

WBS	DESCRIPTION	DIRECT SUBTOTAL	INDIRECTS	SUB TOTAL	ESCALATION %	ESCALATION TOTAL	SUB TOTAL	CONTINGENCY %	CONTINGENCY TOTAL	TOTAL DOLLARS
441101	CONTAINERS RESTRAINTS	249843	118617	368460	2.54	9358	377819	15	56672	434492
441102	LINER BASE FRAME	47564	22581	70145	2.54	1781	71927	15	10789	82716
441103	CONTAINER BASE FRAME	69585	33036	102621	2.54	2606	105228	15	15784	121012
441104	SUMP PUMP SUPPORT	13154	6245	19399	2.54	492	19891	15	2983	22875
441105	LEAK DETECTOR SUPPORT	34997	13020	48017	0.83	396	48413	22	10502	58916
441106	LEVELING BASE ASSEMBLY	254858	109095	363953	2.54	9244	373197	15	55979	429177
SUBTOTAL 4411	LINERS & SUPPORT RACKS(SUBC	843746	361875	1205621	2.47	29807	1235429	16	197050	1432479
441210	MOCKUP & TESTING	155461	45053	200514	2.55	5113	205627	25	51406	257034
441220	INSTALL SUPPORT FRAMES	64114	14309	78423	2.55	1999	80423	25	20105	100529
441230	INSTALL ANCHORING FOR SPPRT FRAMES	7747	2695	10442	2.55	266	10708	25	2677	13385
441240	INSTALL LINERS & SUPPORT RACKS	18545	3496	22041	2.55	562	22604	25	5651	28255
441250	PLUG CELL DRAIN	15804	5401	21205	2.55	540	21745	25	5436	27182
SUBTOTAL 4412	CELL MODS & LINER/RACK INST	261671	70956	332627	2.55	8482	341109	25	85277	426387
441310	LEAK DETECTION & ALARMS - LINERS	424782	143332	568114	2.55	14486	582601	25	145650	728251
441320	INSTALL LIQUID REMOVAL SYSTEM	13545	4538	18083	2.55	461	18545	25	4636	23181
441330	FUNCTIONAL TESTING	118513	26732	145245	1.82	2647	147893	18	26614	174507
SUBTOTAL 4413	LEAK DETECTION & REMOVAL SY	556840	174604	731444	2.41	17595	749039	24	176901	925941
SUBTOTAL 441	CELL UPGRADES-TYPE 1 CONTAI	1662257	607436	2269693	2.46	55885	2325578	20	459229	2784807
442100	LINERS & SUPPORT RACK(SUBCONTRACT)	522808	243267	766075	4.64	35545	801621	15	123345	924967
442104	SUMP PUMP SUPPORT	6608	3137	9745	4.64	452	10197	15	1529	11727
442105	LEAK DETECTOR SUPPORT	81770	17000	98770	4.64	4582	103353	25	25430	128784
SUBTOTAL 4421	LINERS & SUPPORT RACKS(SUBC	611186	263405	874591	4.64	40581	915172	16	150305	1065478
442310	MOCK-UP & TESTING	112405	35119	147524	4.64	6845	154369	25	38592	192961
442320	INSTALL CONT LINER & SUPPORT RACK	632012	154643	786655	4.64	36500	823156	25	205789	1028945
SUBTOTAL 4423	POOL MODIFICATION	744417	189762	934179	4.64	43345	977525	25	244381	1221907
442410	PARTICULATE REMOVAL SYSTEM	30323	8836	39159	4.09	1601	40760	22	9027	49787

WBS	DESCRIPTION	DIRECT SUBTOTAL	INDIRECTS	SUB TOTAL	ESCALATION %	ESCALATION TOTAL	SUB TOTAL	CONTINGENCY %	CONTINGENCY TOTAL	TOTAL DOLLARS
442420	WATER ADDITION & COOLING SYSTEM	427218	145801	573019	4.64	26588	599607	24	146237	745844
442430	ION-EXCHANGE SYSTEM	236762	78946	315708	4.64	14648	330357	25	82589	412947
442440	WET POOL PLATFORM -LOWER LEVEL	32364	13006	45370	4.64	2105	47476	23	11093	58569
SUBTOTAL 4424	WATER MONITORING & CONDITIO	726667	246591	973258	4.62	44943	1018201	24	248947	1267149
442610	FAB COVER BLOCKS - POOL	51000	22509	73509	4.64	3410	76919	24	18454	95374
442620	INSTALLATION OF NEW COVER BLOCKS	19666	5411	25077	4.64	1163	26241	22	5784	32025
442630	INSTALLATION OF PROTECTIVE FRAME	32197	14358	46555	4.64	2160	48716	25	12179	60895
SUBTOTAL 4426	NEW COVER BLOCKS	102863	42279	145142	4.64	6734	151877	24	36418	188295
442710	LEAK DETECTION & ALARM - 2 ND LINER	110955	37509	148464	4.64	6888	155353	25	38838	194191
442720	INSTALL OF LIQUID REMOVAL SYSTEM	1155	401	1556	4.64	72	1629	25	407	2036
442730	FUNCTIONAL TESTING	39072	11573	50645	4.64	2349	52995	25	13248	66244
SUBTOTAL 4427	DRY LINER LEAK DETECTION &	151182	49484	200666	4.64	9310	209977	25	52494	262472
4428	OLD COVER BLOCK REMOVAL & DISPOSAL	159719	41884	201603	4.64	9354	210958	40	84383	295341
SUBTOTAL 4428	OLD COVER BLOCK REMOVAL & D	159719	41884	201603	4.64	9354	210958	40	84383	295341
SUBTOTAL 4428	OLD COVER BLOCK REMOVAL & D	159719	41884	201603	4.64	9354	210958	40	84383	295341
SUBTOTAL 442	POOL UPGRADES-TYPE 2 CONTAI	2496034	833409	3329443	4.63	154270	3483713	23	816930	4300644
443110	FAB & INSTALL WATER FEED LINE	67564	22057	89621	4.43	3970	93591	25	23397	116989
443120	FAB & INSTALL SPRINKLER SYSTEM	203324	51677	255001	4.21	10735	265737	25	66434	332171
443200	221-T CANYON DRY STANDPIPE SYSTEM	666162	116433	782595	4.43	34668	817264	25	204316	1021580
443300	221-T CANYON ALARMS	1125158	344120	1469278	5.07	74492	1543771	25	385942	1929714
SUBTOTAL 443	FIRE PROTECTION UPGRADES	2062208	534289	2596497	4.77	123867	2720365	25	680091	3400456
445100	HELIUM PURGE SYSTEM MODS	37932	12938	50870	4.64	2360	53230	25	13307	66538
445200	OPERATIONS MONITORING (CAMERA) MODS	200483	65983	266466	4.64	12364	278830	25	69707	348538
445300	WATER ADDITION SYSTEM	6275	2978	9253	4.64	429	9683	25	2420	12104

FLUOR FEDERAL SERVICES, INC.
FLUOR HANFORD
JOB NO. 65400258-C0-16
FILE NO. Z811BAA3

** IEST - INTERACTIVE ESTIMATING **
SLUDGE HANDLING SYSTEM - T PLANT
CONCEPTUAL ESTIMATE
DOE_R02 - WORK BREAKDOWN STRUCTURE SUMMARY

DATE 03/29/01 13:48:02
BY BAG

WBS	DESCRIPTION	DIRECT SUBTOTAL	INDIRECTS	SUB TOTAL	ESCALATION %	ESCALATION TOTAL	SUB TOTAL	CONTINGENCY %	CONTINGENCY TOTAL	TOTAL DOLLARS
445410	LOAD CELL PROCUREMENT	31075	9178	40253	4.64	1867	42120	15	6318	48438
445420	HOOK EXTENTION MOD/INSTALL	32758	9642	42400	4.64	1967	44367	15	6655	51022
445430	LOAD CELL/HOOK EXTEN STORAGE RACK	16309	4951	21260	4.64	986	22246	16	3530	25777
SUBTOTAL 4454	LOAD CELL/HOOK EXTENSION/ST	80142	23771	103913	4.64	4821	108735	15	16504	125239
445500	STACK MONITORS	203207	59230	262437	4.64	12177	274614	25	68653	343268
445600	221-T RADIATION MONITORS	126180	37924	164104	4.64	7614	171718	25	42929	214648
SUBTOTAL 445	OTHER UPGRADES	654219	202827	857046	4.64	39766	896813	24	213523	1110336
SUBTOTAL 44	CONSTRUCTION	6874718	2177962	9052680	4.13	373789	9426470	23	2169774	11596245
450010	TITLE III INSPECTION-CDR/DESIGN(FH)	13143	2615	15758	0.00	0	15758	15	2363	18122
450020	TITLE III INSPECTION-CONST/TEST(FH)	113552	22596	136148	3.78	5146	141295	15	21194	162489
SUBTOTAL 4500	TITLE III INSPECTION(FH)	126695	25212	151907	3.39	5146	157053	15	23558	180611
460010	OTHER PROJECT COSTS(FH) FYO1	2142647	426386	2569033	0.00	0	2569033	0	0	2569033
460020	OTHER PROJECT COSTS(FH) FYO2	1302014	259100	1561114	2.55	39808	1600923	20	320184	1921107
460030	OTHER PROJECT COSTS(FH) FYO3	935230	186110	1121340	5.07	56851	1178192	20	235638	1413831
460040	OTHER PROJECT COSTS(FH) FYO4	358997	71440	430437	6.84	29441	459879	20	91975	551855
SUBTOTAL 4600	OTHER PROJECT COSTS(FH)	4738888	943038	5681926	2.22	126102	5808029	11	647799	6455828
SUBTOTAL 4	T-PLANT UPGRADES	15112845	3987548	19100393	3.22	614825	19715219	18	3508289	23223509
500010	PROJECT MANAGEMENT FY01 (FH)	686784	136670	823454	0.00	0	823454	0	0	823454
500020	PROJECT MANAGEMENT FY02 (FH)	960711	191181	1151892	2.55	29373	1181265	15	177189	1358455
500030	PROJECT MANAGEMENT FY03 (FH)	844291	168013	1012304	5.07	51323	1063628	15	159544	1223173
500040	PROJECT MANAGEMENT FY04 (FH)	434965	86558	521523	6.84	35672	557195	15	83579	640774
SUBTOTAL 5000	PROJECT MANAGEMENT (FH)	2926751	582423	3509174	3.32	116369	3625543	12	420313	4045857
PROJECT TOTAL		25,107,065	5,976,398	31,083,463	3.62	1,125,532	32,208,996	16	5,191,319	37,400,315

1. ESTIMATE PURPOSE

BUDGET OR CONCEPTUAL DESIGN COST ESTIMATE: THIS ESTIMATE WILL BE USED TO ESTABLISH THE PROJECT BUDGET(BASELINE).

2. ESTIMATE TECHNICAL BASIS

A. THIS ESTIMATE HAS BEEN PREPARED FOR THE T PLANT SLUDGE HANDLING SYSTEM PROJECT AS REQUESTED BY FFS PROJECT MANAGEMENT.

B. A DESCRIPTION OF THE TECHNICAL SCOPE OF WORK MAY BE FOUND IN THE FOLLOWING REFERENCE DOCUMENTS:
(1) REQUEST FOR ESTIMATE NOVEMBER 28, 2000
(2) TASK ORDER 8276-27
(3) DRAFT CONSTRUCTION WORK PLAN SLUDGE HANDLING SYSTEM, DATED 1/26/01.
(4) DRAFT T-PLANT SLUDGE HANDLING SYSTEM CONCEPTUAL DESIGN REPORT AND DRAWINGS, DATED 1/29/01.

C. THE FOLLOWING CONSTRAINTS AND/OR SPECIAL CONDITIONS EXIST:
(1) THERE WILL BE NO ACCESS TO THE 221-T CANYON PRIOR TO JUNE 2, 2002 DUE TO MOVEMENT OF SHIPPINGPORT FUEL.
THERE WILL BE NO ACCESS TO THE 221-T CANYON AFTER JANUARY 1, 2003 FOR ONE DAY EACH WEEK DUE TO THE RECEIPT OF TYPE 1 SLUDGE CONTAINERS.
(2) THE AVAILABILITY AND THE 45 TON RATING OF THE 221-T CANYON CRANE IS CRITICAL TO THE COMPLETION OF CONSTRUCTION WORK ON THE MODICATION FOR STORAGE OF TYPE 1 AND TYPE 2 CONTAINERS WITHIN THE CANYON. NO ALTERNATIVES FOR THE CANYON CRANE CURRENTLY EXIST.

3. ESTIMATE METHODOLOGY

A. DIRECT COSTS:
BOTTOMS-UP TECHNIQUE, SPECIFIC ANALOGY TECHNIQUE, PARAMETRIC TECHNIQUE, AND EXPERT OPINION TECHNIQUE HAVE BEEN UTILIZED IN THE PREPARATION OF THIS ESTIMATE.
(1) CONSTRUCTION LABOR, MATERIAL AND EQUIPMENT UNITS HAVE BEEN ESTIMATED BASED UPON ONE OR MORE OF THE FOLLOWING STANDARD COMMERCIAL ESTIMATING RESOURCES, PUBLISHED ESTIMATING MANUALS/DATABASES: IN HOUSE DATABASES, R.S. MEANS, NATIONAL ELECTRICAL CONTRACTORS ASSOCIATION, INC., (NECA) MANUAL OF LABOR UNITS, ELECTRICAL RESOURCES, INC. ELECTRICAL ESTIMATING PRICE AND LABOR MANUAL. THE UNITS MAY HAVE BEEN FACTORED/ADJUSTED BY THE ESTIMATOR AS APPROPRIATE TO REFLECT INFLUENCES BY CONTRACT, WORK SITE, OR OTHER IDENTIFIED PROJECT OR SPECIAL CONDITIONS.

(2) PROJECT HANFORD MANAGEMENT CONTRACT COSTS FOR FLUOR HANFORD INC. HAVE BEEN PROVIDED BY FFS PROJECT MANAGEMENT FOR INCLUSION IN THE ESTIMATE.

B. DIRECT COST FACTORS:
(1) SALES TAX HAS BEEN APPLIED TO ALL MATERIALS AND EQUIPMENT PURCHASES AT 8%.

(2) A FACTOR OF 18.4% HAS BEEN APPLIED TO DIRECT CRAFT LABOR FOR GENERAL CONDITIONS TO ALLOW FOR HAULING MEN & MATERIALS, AND CLEAN-UP LABOR SUPPORT.

(3) A FACTOR OF 10.0% HAS BEEN APPLIED TO DIRECT CRAFT LABOR AND MATERIAL FOR FFS CONSTRUCTION MANAGEMENT TO ALLOW FOR CONSTRUCTION ADMINISTRATION, AND QUALITY ASSURANCE ADMINISTRATION.

(4) CONTRACT ADMINISTRATION FACTOR OF 23% HAS BEEN APPLIED TO THE DIRECT CONTRACT VALUE WHICH INCLUDES COSTS FOR CONTRACT MANAGEMENT & ADMINISTRATION AND PLANNING SUPPORT.

B. DIRECT COST FACTORS CONTINUED:

(5) CONSTRUCTION CONSUMABLES ARE ESTIMATED AT 3.5% OF DIRECT CRAFT LABOR COSTS TO ALLOW FOR SMALL TOOLS, WELD ROD, TAPE, CAULKING, PLASTICS, GLOVES, PAPER ETC..

(6) GENERAL FOREMAN FACTOR OF 3% HAS BEEN APPLIED TO ELECTRICIAN, LABORER AND PIPEFITTER DIRECT HOURS.

(7) A FACTOR OF 3% HAS BEEN APPLIED TO DIRECT CRAFT LABOR TO ALLOW FOR USAGE OF GOVERNMENT OWNED EQUIPMENT CONTROLLED BY DYNCORP (LIGHT EQUIPMENT POOL). LIGHT EQUIPMENT INCLUDES SEDANS, VANS, AND PICK-UP TRUCKS USED BY FFS CONSTRUCTION PERSONNEL.

(8) A SPECIAL WORK PROCEDURE (SWP) FACTOR IS APPLIED TO ALL ELECTRICAL WORK WITHIN THE 221-T CANYON OR RADIOLOGICAL AREA, TO ADJUST DIRECT LABOR UPWARD TO ACCOUNT FOR TIME DURING THE WORK DAY PERIOD REQUIRED TO BE SPENT ON SUCH ITEMS AS DAILY PRE-JOB SAFETY MEETINGS, GAINING ACCESS AUTHORIZATION TO RADIOLOGICAL CONTROLLED AREAS, DRESSING AND UNDRESSING PERSONAL PROTECTIVE EQUIPMENT (PPE), CLEARING OR RELEASING WORK AREAS OF CONTAMINATED MATERIALS AND MOVING MATERIALS, TOOLS AND EQUIPMENT OUT OF THE RADIOLOGICAL AREAS. THE RATES WHICH HAVE BEEN APPLIED ARE AS FOLLOWS:
MASK WORK = 85% PLUS 15% FOR WEARING PROTECTIVE CLOTHING.

(9) ALL OTHER CONSTRUCTION WORK PERFORMED BY FFS WITHIN THE 221-T CANYON OR OTHER RADIOLOGICAL AREAS IS BASED ON A 10 HOUR WORKSHIFT WITH 4 HOURS OF CONSTRUCTION WORK BEING PERFORMED PER SHIFT.

C. INDIRECT COSTS:
FIXED PRICE CONTRACTOR OVERHEAD, PROFIT, BOND AND INSURANCE COSTS HAVE BEEN APPLIED AT THE FOLLOWING PERCENTAGES: LABOR = 26.5%, EQUIPMENT USE = 0%, MATERIAL = 26.5%, SUBCONTRACT = 10%, AND EQUIPMENT = 0% , AND ARE REFLECTED IN THE "OH&P/B&I" COLUMN OF THE ESTIMATE DETAIL REPORT.

D. RATES:
(1) FOR ESTIMATING PURPOSES, AVERAGE FFS RATES BY OPERATIONS CODE HAVE BEEN DEVELOPED BASED UPON RECENT COST HISTORY AND ADJUSTED TO REFLECT INDUSTRY AVERAGE AE/CM RATES.

(2) FLUOR FEDERAL SERVICES NORTHWEST SERVICES (CONSTRUCTION CRAFT LABOR) RATES ARE THOSE LISTED IN APPENDIX A TO THE HANFORD SITE STABILIZATION AGREEMENT (HSSA). THE HSSA RATES INCLUDE BASE WAGE, FRINGE BENEFITS AND OTHER COMPENSATION AS NEGOTIATED BETWEEN FLUOR HANFORD INC. AND THE NATIONAL BUILDING AND CONSTRUCTION TRADES DEPARTMENT AFL-CIO. FLUOR FEDERAL SERVICES ESTIMATING INCORPORATES FACTORS TO COVER ADDITIONAL COSTS FOR WORKMANS COMPENSATION, FICA, STATE AND FEDERAL UNEMPLOYMENT INSURANCE AND G&A/FEE TO DEVELOP A FULLY BURDENED RATE BY CRAFT.

(3) FIXED PRICE CONSTRUCTION CRAFT LABOR RATES ARE THOSE LISTED IN APPENDIX A TO THE HANFORD SITE STABILIZATION AGREEMENT (HSSA). THE HSSA RATES INCLUDE BASE WAGE, FRINGE BENEFITS AND OTHER COMPENSATION AS NEGOTIATED BETWEEN FLUOR HANFORD INC. AND THE NATIONAL BUILDING AND CONSTRUCTION TRADES DEPARTMENT AFL-CIO. FLUOR FEDERAL SERVICES ESTIMATING INCORPORATES FACTORS TO COVER ADDITIONAL COSTS FOR WORKMANS COMPENSATION, FICA, STATE AND FEDERAL UNEMPLOYMENT INSURANCE TO DEVELOP A FULLY BURDENED RATE BY CRAFT.

E. SITE INDIRECT PERCENTAGES:

SITE INDIRECT PERCENTAGES ARE DEVELOPED AND PROVIDED BY FLUOR HANFORD INC. (FHI) OR CHG FOR ESTIMATING USE.

(1) HANFORD SITE GENERAL ADMINISTRATIVE (G&A)/SHARED SERVICES: APPLIED TO ALL COSTS TO LIQUIDATE THE COST OF PHMC/RPP GENERAL ADMINISTRATIVE SERVICES AND ROADS, WATER, UTILITIES, FIRE ETC.: FY 01 TO FY 07 19.90% FHI.

THE ABOVE FACTORS ARE COMPOUNDED AND APPLIED TO ESTIMATED COSTS.

E. SITE INDIRECT PERCENTAGES CONTINUED:

(1) FFS DESIGN, CONSTRUCTION AND CONSTRUCTION MGMT. FY 01 TO FY 07 19.90% PHMC.

(2) FFS FIXED PRICE CONSTRUCTION: FY 01 TO FY 07 19.90% PHMC.

(3) PHMC/RPP PROCUREMENTS: FY 01 TO FY 07 19.90% PHMC.

4. ESCALATION
==========
ESCALATION PERCENTAGES WERE CALCULATED FROM THE MARCH 2001 UPDATE OF THE ECONOMIC ESCALATION PRICE CHANGE INDICES FOR DOE CONSTRUCTION PROJECTS AND OPERATING EXPENSES AS PUBLISHED BY THE "OFFICE OF ENGINEERING AND CONSTRUCTION MANAGEMENT".

5. CONTINGENCY
==========
A. DEFINITION OF CONTINGENCY AS PROVIDED BY DOE

"CONTINGENCY COVERS COSTS THAT MAY RESULT FROM INCOMPLETE DESIGN, UNFORESEEN AND UNPREDICTABLE CONDITIONS, OR UNCERTAINTIES WITHIN THE DEFINED PROJECT SCOPE. THE AMOUNT OF CONTINGENCY WILL DEPEND ON THE STATUS OF DESIGN, PROCUREMENT, AND CONSTRUCTION; AND THE COMPLEXITY AND UNCERTAINTIES OF THE COMPONENT PARTS OF THE PROJECT. CONTINGENCY IS NOT TO BE USED TO AVOID MAKING AN ACCURATE ASSESSMENT OF EXPECTED COST" (OFFICE OF WASTE MANAGEMENT (EM-30) COST AND SCHEDULE GUIDE.

B. CONTINGENCY ALLOWANCE GUIDELINES

THE DOE GUIDELINE CONTINGENCY ALLOWANCE:
CDR ESTIMATE - STANDARD = 15% - 25%
CDR ESTIMATE - EXPERIMENTAL/SPECIAL CONDITIONS = UP TO 40%

C. METHODOLOGY

CONTINGENCY IS EVALUATED AT THE LOWEST WORK BREAKDOWN STRUCTURE (WBS) LEVEL WITHIN THE COST ESTIMATE DETAILS. IT IS SUMMARIZED AT UPPER WBS LEVELS AND REPORTED ON THE SUMMARY REPORTS.

D. ANALYSIS

AN ASSESSMENT OF DESIGN MATURITY, WORK COMPLEXITY AND PROJECT UNCERTAINTIES HAS BEEN PERFORMED. AN EXPLANATION OF THIS ASSESSMENT AND CONTINGENCY RATES WHICH HAVE BEEN ADDED TO THE COST OF WORK ARE AS FOLLOWS:

A CONTINGENCY OF 25% HAS BEEN APPLIED TO ALL FIELD CONSTRUCTION WORK AROUND AND WITHIN THE 221-T BUILDING TO ALLOW FOR POTENTIAL IMPACTS TO THE PROJECT DUE TO UNKNOWN AND UNFORESEEN RADIOLOGICAL CONDITIONS. COMPLETE DESIGN DRAWING ARE NOT AVAILABLE AT THIS TIME AND CONTINGENCY ADDRESSES IMPACTS THAT COULD RESULT UPON COMPLETION OF DESIGN. CONTINGENCY HAS BEEN APPLIED TO ADDRESS PHYSICAL CONDITIONS WITHIN THE BUILDING THAT COULD POTENTIALLY IMPACT THE COST.

A CONTINGENCY OF 15% HAS BEEN APPLIED TO ALL NEW EQUIPMENT, LINERS AND CONTAINERS TO BE ACQUIRED BY THIS PROJECT.

A CONTINGENCY OF 40% HAS BEEN APPLIED TO THE HANDLING AND DISPOSAL OF OLD COVER BLOCKS DUE TO UNKNOWN RADIOLOGICAL CONDITIONS THAT EXIST WITHIN 221-T CANYON, AND THE PRELIMINARY DETERMINATION OF THE REQUIREMENTS FOR DISPOSAL, CRACK SURVEY ENGINEERING ANALYSIS DUE TO UNKNOWN CONDITIONS IN THE CELL, AND PLUG CELL DRAIN DUE TO UNKNOWN CONDITIONS AFTER CLEANUP AND CHANGING REQUIREMENTS FOR PLUGGING DRAINS.

6. ROUNDING

THE PROJECT COST SUMMARY REPORT IS SUMMARIZED AND ADJUSTED/ROUNDED AS FOLLOWS:
THE ESCALATED TOTAL COST COLUMN, CONTINGENCY TOTAL COLUMN AND TOTAL DOLLARS COLUMN SUB-TOTALS ARE SUMMARIZED BY CONTRACTOR. THE COLUMN SUBTOTALS ARE ADJUSTED/ROUNDED TO THE NEAREST $1,000/$10,000. THE PROJECT TOTAL SUMMARY LINE TOTALS ARE ADJUSTED/ROUNDED TO THE NEAREST $10,000/$100,000.

7. REMARKS

MAJOR ASSUMPTIONS WHICH HAVE BEEN MADE IN THE PREPARATION OF THIS ESTIMATE ARE AS FOLLOWS:

A.) TYPE 1 AND TYPE 2 CONTAINERS, OVERPACKS, AND SPACERS WILL BE ACQUIRED BY FHI USING A FP CONTRACT. THE CONTRACT WILL INCLUDE DESIGN, FABRICATION, AND DELIVERY TO FHI AT T-PLANT. ESTIMATE BASED ON QUOTE FROM JOESEPH OAT CORPORATION, CAMDEN NJ. DATED 1/16/01.

B.) ALL DESIGN AND CONSTRUCTION OF THE TYPE 1 AND TYPE 2 CONTAINER STORAGE LINERS AND EQUIPMENT, INSTRUMENTATION/ ELECTRICAL, WATER ADDITION SYSTEM, 221-T FIRE PROTECTION, ION EXCHANGE SYSTEM, COVERBLOCKS, PARTICULATE REMOVAL SYSTEM AND HELIUM SYSTEM UPGRADES WILL BE PERFORMED BY FFS.

C.) THE DESIGN AND CONSTRUCTION OF THE 271-T FIRE PROTECTION WILL BE BY VENDOR.

D.) THE FIRE SPRINKLER SYSTEM FOR BUILDING 271-T WILL NOT ENCOUNTER ANY ASBESTOS, CHEMICAL, OR RAD CONTAMINATION.

E.) ALL MOCKUP TESTING CAN BE PERFORMED AT A CLEAN FACILITY NEAR T-PLANT WITH AN OVERHEAD CRANE.

F.) TRAINING REQUIREMENTS FOR CANYON ENRY IS: RCRA HAZARDOUS WASTE WORKER, RADIATION WORKER 2, FACILITY ORIENTATION, RESPIRATION PROTECTION.

G.) EXISTING ION EXCHANGE COLUMN WILL BE REMOVED AND DISPOSED OF BY OTHERS.

H.) ALL REQUIRED HANFORD HEADS CAN BE SUPPLIED BY THE FACILITY AS GFE.

KEY PROJECT ASSUMPTIONS/NOTES ON OPC COST:

1.) ONE FULL TIME DEDICATED NPO AND TWO FULL TIME DEDICATED HPT'S ARE INCLUDED IN THE PROJECT OPC COST DURING CONSTRUCTION.

2.) NO RCRA PERMITTING SUPPORT IS INCLUDED IN THE OPC COST.

3.) NO SUPPORT FOR AN EIS IN INCLUDED, IT IS ASSUMED THAT FONSI WILL BE ISSUED BY RL.

4.) NO SPECIFIC TSCA PERMIT IS EXPECTED TO BE REQUIRED.

5.) ASSUMES WM WILL HAVE 10CFR830 COMPLIANT MSAR THAT THE PROJECT WILL ECN WITH A SPECIFIC ADDENDUM.

6.) PORTABLE CRANE FOR SLUDGE CONTAINER LOADOUT IS ASSUMED TO BE SUPPLIED BY OTHERS.

7.) WM FACILITY BUDGET HAS SUPPLEMENTAL FUNDING FOR ENG/QA/OPS/RAD CON/AIR/NEPA/ECO/IS&H.

8.) ASSUMES PROJECT FUNDING REMAINS INTACT FROM NOW UNTIL COMPLETION OF THE PROJECT SCOPE.

9.) ASSUMES FACILITY RAD CON SUPPORT INCLUDES A FOUR MEMBER ALARA REVIEW TEAM THROUGH OUT PROJECT.

10.) INCLUDES CONTAINER SARP AND CONTAINER TECHNICAL SUPPORT FROM SNF.

11.) INCLUDES WM/SNF PROJECT MANAGEMENT, DESIGN AUTHORITY SUPPORT.

12.) INCLUDES CVI DATA PREPARATION AS NECESSARY TO SUPPORT OPERATIONS FOR ACCEPTANCE FOR BENIFICIAL USE.

13.) INCLUDES NOI FOR AIR PERMITTING.

14.) WM FACILITY HAS THE MAJORITY OF READINESS REVIEW, PROCEDURE DEVELOPMENT AND TRAINING BUDGETS AND FUNDS.

15.) ONLY MINIMAL PROJECT SPECIFIC SUPPORT (IE VCI, O&M MANUALS) FOR START UP & READINESS ARE INCLUDED IN THE OPC.

16.) ASSUMES THE PROJECT WILL NOT PAY FOR ANY HEPA FILTER CHANGE OUT.

17.) ONE TIME SLUDGE CHARGE FOR STORAGE OF RH TRU WILL NOT BE PART OF THE PROJECT OPC BUT BY SNF OPERATIONS.

18.) NO PROJECT SPECIFIC QA PLAN WILL BE DEVELOPED OR BUDGETED AS EXISTING WM AND SNF QA PROGRAMS WIL BE FOLLOWED.

19.) COST INCURRED PRIOR TO FY 01 ARE NOT INCLUDED IN OPC.

FLUOR FEDERAL SERVICES, INC.
FLUOR HANFORD
JOB NO. 65400258-C0-16
FILE NO. Z811BAA3

** IEST - INTERACTIVE ESTIMATING **
SLUDGE HANDLING SYSTEM - T PLANT
CONCEPTUAL ESTIMATE
DOE_R04 - COST CODE ACCOUNT SUMMARY

COST CODE/WBS	DESCRIPTION	DIRECT SUBTOTAL	INDIRECTS	SUB TOTAL	ESCALATION %	ESCALATION TOTAL	SUB TOTAL	CONTINGENCY %	CONTINGENCY TOTAL	TOTAL DOLLARS
000	ENGINEERING									
240010	OTHER PROJECT COSTS FY01	375418	74708	450126	0.00	0	450126	0	0	450126
240020	OTHER PROJECT COSTS FY02	383174	76251	459425	2.55	11715	471140	15	70671	541812
240030	OTHER PROJECT COSTS FY03	418987	83378	502365	5.07	25469	527835	15	79175	607010
411100	TYPE1 CONTAINER STORAGE -DESIGN	164249	31824	196073	0.00	0	196073	15	29410	225484
411200	TYPE2 CONT STORAGE & EQUIP DESIGN	355553	68876	424429	1.95	8276	432706	15	64905	497612
411300	RADIATION MONITORING SYSTEM DESIGN	6151	1189	7340	1.95	143	7483	15	1122	8606
411400	LOAD CELL DESIGN	11290	2187	13477	0.00	0	13477	15	2021	15499
411500	HELIUM SYSTEM MODS DESIGN	28735	5564	34299	0.00	0	34299	15	5144	39444
411600	FIRE PROTECTION UPGRADES DESIGN	110251	21322	131573	1.54	2026	133599	15	20039	153639
411700	WATER ADDITION SYSTEM DESIGN	16039	3105	19144	2.35	449	19594	15	2939	22533
411800	VIDEO CAMERA SYSTEM UPGRADES DESIGN	13458	2603	16061	0.00	0	16061	15	2409	18470
411900	STACK MONITORING DESIGN	15430	2985	18415	1.95	359	18774	15	2816	21590
411A00	GENERAL ENGINEERING TASKS - TYPE 1	88010	17045	105055	0.00	0	105055	15	15758	120813
411B00	GENERAL ENGINEERING TASKS - TYPE 2	66633	12899	79532	1.95	1550	81083	15	12162	93246
411C00	ENGINEERING SUPPORT TYPE 1 STORAGE	342831	66599	409430	0.00	0	409430	15	61414	470845
411D00	ENGINEERING SUPPORT TYPE 2 STORAGE	249020	48294	297314	1.95	5797	303112	15	45466	348579
412100	ENGINEERING DURING CONSTRUCTION	685454	132864	818318	3.57	29213	847532	15	127129	974662
412200	CRACK SURVEY ENGINEERING ANALYSIS	53613	18253	71866	3.57	2565	74431	40	29772	104204
441105	LEAK DETECTOR SUPPORT	24413	7995	32408	0.00	0	32408	25	8102	40510
TOTAL 000	ENGINEERING	3408709	677949	4086658	2.14	87568	4174226	14	580463	4754690
501	BUILDINGS									
443300	221-T CANYON ALARMS	748025	256872	1004897	5.07	50948	1055846	25	263961	1319807
445600	221-T RADIATION MONITORS	95647	31117	126764	4.64	5881	132645	25	33161	165807
TOTAL 501	BUILDINGS	843672	287989	1131661	5.02	56830	1188492	25	297123	1485615
700	SPECIAL EQUIP/PROCESS SYSTEMS									
210000	TYPE 1 CONTAINERS	3399000	676401	4075401	4.64	189098	4264499	15	639674	4904174
220000	TYPE 2 CONTAINERS	2161890	430216	2592106	5.94	153971	2746077	15	411911	3157988
230000	CONTAINER OVERPACKS	329000	65471	394471	3.57	14082	408553	15	61283	469836
430000	CONSTRUCTION MANAGEMENT (FFS)	1165827	405718	1571545	3.78	59404	1630950	15	244642	1875592
441100	CONTAINER RACK/LINER ASSY	173745	59278	233023	2.54	5927	238950	19	44337	283287

FLUOR FEDERAL SERVICES, INC.
FLUOR HANFORD
JOB NO. 65400258-C0-16
FILE NO. Z811BAA3

** IEST - INTERACTIVE ESTIMATING **
SLUDGE HANDLING SYSTEM - T PLANT
CONCEPTUAL ESTIMATE
DOE_R04 - COST CODE ACCOUNT SUMMARY

COST CODE/WBS	DESCRIPTION	DIRECT SUBTOTAL	INDIRECTS	SUB TOTAL	ESCALATION %	ESCALATION TOTAL	SUB TOTAL	CONTINGENCY %	CONTINGENCY TOTAL	TOTAL DOLLARS
441101	CONTAINERS RESTRAINTS	249843	118617	368460	2.54	9358	377819	15	56672	434492
441102	LINER BASE FRAME	47564	22581	70145	2.54	1781	71927	15	10789	82716
441103	CONTAINER BASE FRAME	69585	33036	102621	2.54	2606	105228	15	15784	121012
441104	SUMP PUMP SUPPORT	13154	6245	19399	2.54	492	19891	15	2983	22875
441105	LEAK DETECTOR SUPPORT	10584	5024	15608	2.54	396	16005	15	2400	18406
441106	LEVELING BASE ASSEMBLY	254858	109095	363953	2.54	9244	373197	15	55979	429177
441210	MOCKUP & TESTING	155461	45053	200514	2.55	5113	205627	25	51406	257034
441220	INSTALL SUPPORT FRAMES	64114	14309	78423	2.55	1999	80423	25	20105	100529
441230	INSTALL ANCHORING FOR SPPRT FRAMES	7747	2695	10442	2.55	266	10708	25	2677	13385
441240	INSTALL LINERS & SUPPORT RACKS	18545	3496	22041	2.55	562	22604	25	5651	28255
441250	PLUG CELL DRAIN	15804	5401	21205	2.55	540	21745	25	5436	27182
441310	LEAK DETECTION & ALARMS - LINERS	424782	143332	568114	2.55	14486	582601	25	145650	728251
441320	INSTALL LIQUID REMOVAL SYSTEM	13545	4538	18083	2.55	461	18545	25	4636	23181
441330	FUNCTIONAL TESTING	118513	26732	145245	1.82	2647	147893	18	26614	174507
442100	LINERS & SUPPORT RACK(SUBCONTRACT)	522808	243267	766075	4.64	35545	801621	15	123345	924967
442104	SUMP PUMP SUPPORT	6608	3137	9745	4.64	452	10197	15	1529	11727
442105	LEAK DETECTOR SUPPORT	81770	17000	98770	4.64	4582	103353	25	25430	128784
442310	MOCK-UP & TESTING	112405	35119	147524	4.64	6845	154369	25	38592	192961
442320	INSTALL CONT LINER & SUPPORT RACK	632012	154643	786655	4.64	36500	823156	25	205789	1028945
442410	PARTICULATE REMOVAL SYSTEM	30323	8836	39159	4.09	1601	40760	22	9027	49787
442420	WATER ADDITION & COOLING SYSTEM	427218	145801	573019	4.64	26588	599607	24	146237	745844
442430	ION-EXCHANGE SYSTEM	236762	78946	315708	4.64	14648	330357	25	82589	412947
442440	WET POOL PLATFORM -LOWER LEVEL	32364	13006	45370	4.64	2105	47476	23	11093	58569
442610	FAB COVER BLOCKS - POOL	51000	22509	73509	4.64	3410	76919	24	18454	95374
442620	INSTALLATION OF NEW COVER BLOCKS	19666	5411	25077	4.64	1163	26241	22	5784	32025
442630	INSTALLATION OF PROTECTIVE FRAME	32197	14358	46555	4.64	2160	48716	25	12179	60895
442710	LEAK DETECTION & ALARM - 2 ND LINER	110955	37509	148464	4.64	6888	155353	25	38838	194191
442720	INSTALL OF LIQUID REMOVAL SYSTEM	1155	401	1556	4.64	72	1629	25	407	2036
442730	FUNCTIONAL TESTING	39072	11573	50645	4.64	2349	52995	25	13248	66244
4428	OLD COVER BLOCK REMOVAL & DISPOSAL	159719	41884	201603	4.64	9354	210958	40	84383	295341
443110	FAB & INSTALL WATER FEED LINE	67564	22057	89621	4.43	3970	93591	25	23397	116989
443120	FAB & INSTALL SPRINKLER SYSTEM	203324	51677	255001	4.21	10735	265737	25	66434	332171
443200	221-T CANYON DRY STANDPIPE SYSTEM	666162	116433	782595	4.43	34668	817264	25	204316	1021580
443300	221-T CANYON ALARMS	377133	87248	464381	5.07	23544	487925	25	121981	609906
445100	HELIUM PURGE SYSTEM MODS	37932	12938	50870	4.64	2360	53230	25	13307	66538
445200	OPERATIONS MONITORING (CAMERA) MODS	200483	65983	266466	4.64	12364	278830	25	69707	348538
445300	WATER ADDITION SYSTEM	6275	2978	9253	4.64	429	9683	25	2420	12104
445410	LOAD CELL PROCUREMENT	31075	9178	40253	4.64	1867	42120	15	6318	48438
445420	HOOK EXTENTION MOD/INSTALL	32758	9642	42400	4.64	1967	44367	15	6655	51022
445430	LOAD CELL/HOOK EXTEN STORAGE RACK	16309	4951	21260	4.64	986	22246	16	3530	25777
445500	STACK MONITORS	203207	59230	262437	4.64	12177	274614	25	68653	343268

FLUOR FEDERAL SERVICES, INC.
FLUOR HANFORD
JOB NO. 65400258-C0-16
FILE NO. Z811BAA3

** IEST - INTERACTIVE ESTIMATING **
SLUDGE HANDLING SYSTEM - T PLANT
CONCEPTUAL ESTIMATE
DOE_R04 - COST CODE ACCOUNT SUMMARY

COST CODE/WBS	DESCRIPTION	DIRECT SUBTOTAL	INDIRECTS	SUB TOTAL	ESCALATION %	ESCALATION TOTAL	SUB TOTAL	CONTINGENCY %	CONTINGENCY TOTAL	TOTAL DOLLARS
445600	221-T RADIATION MONITORS	30533	6807	37340	4.64	1732	39073	25	9768	48841
450010	TITLE III INSPECTION-CDR/DESIGN(FH)	13143	2615	15758	0.00	0	15758	15	2363	18122
450020	TITLE III INSPECTION-CONST/TEST(FH)	113552	22596	136148	3.78	5146	141295	15	21194	162489
460010	OTHER PROJECT COSTS(FH) FY01	2142647	426386	2569033	0.00	0	2569033	0	0	2569033
460020	OTHER PROJECT COSTS(FH) FY02	1302014	259100	1561114	2.55	39808	1600923	20	320184	1921107
460030	OTHER PROJECT COSTS(FH) FY03	935230	186110	1121340	5.07	56851	1178192	20	235638	1413831
460040	OTHER PROJECT COSTS(FH) FY04	358997	71440	430437	6.84	29441	459879	20	91975	551855
500010	PROJECT MANAGEMENT FY01 (FH)	686784	136670	823454	0.00	0	823454	0	0	823454
500020	PROJECT MANAGEMENT FY02 (FH)	960711	191181	1151892	2.55	29373	1181265	15	177189	1358455
500030	PROJECT MANAGEMENT FY03 (FH)	844291	168013	1012304	5.07	51323	1063628	15	159544	1223173
500040	PROJECT MANAGEMENT FY04 (FH)	434965	86558	521523	6.84	35672	557195	15	83579	640774
TOTAL 700	SPECIAL EQUIP/PROCESS SYSTEM	20854684	5010459	25865143	3.79	981134	26846277	16	4313732	31160009
PROJECT TOTAL		25,107,065	5,976,398	31,083,463	3.62	1,125,532	32,208,996	16	5,191,319	37,400,315

FLUOR FEDERAL SERVICES, INC.
FLUOR HANFORD
JOB NO. 65400258-C0-16
FILE NO. Z811BAA3

** IEST - INTERACTIVE ESTIMATING **
SLUDGE HANDLING SYSTEM - T PLANT
CONCEPTUAL ESTIMATE
DOE_R05 - ESTIMATE SUMMARY BY CSI DIVISION

CSI/CCA	DESCRIPTION	DIRECT SUBTOTAL	INDIRECTS	SUB TOTAL	ESCALATION %	ESCALATION TOTAL	SUB TOTAL	CONTINGENCY %	CONTINGENCY TOTAL	TOTAL DOLLARS
	ENGINEERING									
68	TEST & FINAL CHECKOUT	24413	7995	32408	0.00	0	32408	25	8102	40510
90	ENGINEERING	2206717	435616	2642333	1.91	50382	2692716	16	422515	3115231
93	FIELD SUPPORT & STAFF	1177579	234338	1411917	2.63	37185	1449102	10	149846	1598948
	TOTAL ENGINEERING	3,408,709	677,949	4,086,658	2.14	87,568	4,174,226	14	580,463	4,754,690
	CONSTRUCTION									
01	DEMOLITION	159719	41884	201603	4.64	9354	210958	40	84383	295341
11	FORMWORK	7943	3771	11714	4.64	543	12257	25	3064	15322
12	REINFORCING & EMBEDS	16864	8006	24870	4.64	1153	26024	25	6506	32530
13	CONCRETE PLACEMENT	10792	5123	15915	4.64	738	16654	25	4163	20817
18	GROUTING	15804	5401	21205	2.55	540	21745	25	5436	27182
20	STRUCTURAL STEEL	88593	23892	112485	3.10	3487	115973	25	28993	144966
21	STRUCTURAL STEEL FOR BUILDING	27800	13198	40998	4.64	1902	42900	25	10725	53626
22	PIPERACKS	476738	226340	703078	4.64	32622	735701	15	111323	847025
23	DECKING	7620	2633	10253	4.64	475	10729	25	2682	13411
24	EQUIPMENT STRUCTURES	254858	109095	363953	2.54	9244	373197	15	55979	429177
25	LADDER PLATFORM WALKWAYS	41626	19535	61161	4.64	2837	63999	25	15999	79999
26	SPECIAL ITEMS	619978	259745	879723	2.89	25402	905126	17	156214	1061340
38	PLUMBING & FIRE PROTECTION	668149	194807	862956	4.49	38766	901722	25	225430	1127153
40	MACHINERY & EQUIPMENT	9734	3213	12947	4.64	600	13547	25	3386	16934
42	SHOP FAB TANKS/VESSELS	5889890	1172088	7061978	5.06	357152	7419130	15	1112869	8532000
44	HEAT EXCHANGERS	3512	1667	5179	4.64	240	5419	25	1354	6774
46	PUMPS	64204	21902	86106	4.42	3806	89912	23	21083	110996
47	OTHER PROCESS EQUIPMENT	124277	43493	167770	4.64	7784	175555	25	43888	219444
48	MATERIAL HANDLING EQUIPMENT	78676	23384	102060	4.64	4735	106796	15	16019	122815
53	ABOVE GROUND LARGE BORE PIPE ERECT	92041	31016	123057	4.64	5709	128767	25	32191	160958
59	TESTING & CLEANING	171860	47151	219011	4.54	9946	228957	24	56076	285033
60	ELECTRICAL	1739578	589455	2329033	4.32	100514	2429548	25	607387	3036935
71	INSTRUMENTS	102242	33299	135541	4.36	5911	141452	25	35363	176815
75	SPECIALTY ITEMS	183979	62327	246306	4.64	11428	257735	25	64433	322169
79	TESTING	157585	38306	195891	2.55	4997	200888	20	39863	240752
81	SURFACE PREP & COATINGS	28890	13716	42606	4.64	1976	44583	15	6687	51270
90	ENGINEERING	5355823	1094849	6450672	2.40	154607	6605279	12	820962	7426242
91	TEMPORARY CONSTRUCTION FACILITIES	365824	21931	387755	4.54	17607	405362	25	101340	506703
92	CONST. SERVICES, SUPPLIES & EXPENCE	788401	186825	975226	4.60	44866	1020092	25	253062	1273154

FLUOR FEDERAL SERVICES, INC.
FLUOR HANFORD
JOB NO. 65400258-C0-16
FILE NO. Z811BAA3

** IEST - INTERACTIVE ESTIMATING **
SLUDGE HANDLING SYSTEM - T PLANT
CONCEPTUAL ESTIMATE
DOE_R05 - ESTIMATE SUMMARY BY CSI DIVISION

DATE 03/29/01 13:48:23
BY BAG

CSI/CCA	DESCRIPTION	DIRECT SUBTOTAL	INDIRECTS	SUB TOTAL	ESCALATION %	ESCALATION TOTAL	SUB TOTAL	CONTINGENCY %	CONTINGENCY TOTAL	TOTAL DOLLARS
93	FIELD SUPPORT & STAFF	4145356	1000384	5145740	3.48	179007	5324747	13	683980	6008728
	TOTAL CONSTRUCTION	21,698,356	5,298,449	26,996,805	3.84	1,037,964	28,034,769	16	4,610,855	32,645,625
	PROJECT TOTAL	25,107,065	5,976,398	31,083,463	3.62	1,125,532	32,208,996	16	5,191,319	37,400,315

FLUOR FEDERAL SERVICES, INC.
FLUOR HANFORD
JOB NO. 65400258-C0-16
FILE NO. Z811BAA3

** IEST - INTERACTIVE ESTIMATING **
SLUDGE HANDLING SYSTEM - T PLANT
CONCEPTUAL ESTIMATE
DOE_R07 - ONSITE INDIRECT COSTS BY WBS

WBS	DESCRIPTION	DIRECT SUBTOTAL	CONSTRUCTION %	MGMT/ADMIN TOTAL	DYNCORP EQUIP	SITE INDIRECTS	TOTAL INDIRECTS
210000	TYPE 1 CONTAINERS	3399000	0.00	0	0	676401	676401
220000	TYPE 2 CONTAINERS	2161890	0.00	0	0	430216	430216
230000	CONTAINER OVERPACKS	329000	0.00	0	0	65471	65471
240010	OTHER PROJECT COSTS FY01	375418	0.00	0	0	74708	74708
240020	OTHER PROJECT COSTS FY02	383174	0.00	0	0	76251	76251
240030	OTHER PROJECT COSTS FY03	418987	0.00	0	0	83378	83378
411100	TYPE1 CONTAINER STORAGE -DESIGN	164249	0.00	0	0	31824	31824
411200	TYPE2 CONT STORAGE & EQUIP DESIGN	355553	0.00	0	0	68876	68876
411300	RADIATION MONITORING SYSTEM DESIGN	6151	0.00	0	0	1189	1189
411400	LOAD CELL DESIGN	11290	0.00	0	0	2187	2187
411500	HELIUM SYSTEM MODS DESIGN	28735	0.00	0	0	5564	5564
411600	FIRE PROTECTION UPGRADES DESIGN	110251	0.00	0	0	21322	21322
411700	WATER ADDITION SYSTEM DESIGN	16039	0.00	0	0	3105	3105
411800	VIDEO CAMERA SYSTEM UPGRADES DESIGN	13458	0.00	0	0	2603	2603
411900	STACK MONITORING DESIGN	15430	0.00	0	0	2985	2985
411A00	GENERAL ENGINEERING TASKS - TYPE 1	88010	0.00	0	0	17045	17045
411B00	GENERAL ENGINEERING TASKS - TYPE 2	66633	0.00	0	0	12899	12899
411C00	ENGINEERING SUPPORT TYPE 1 STORAGE	342831	0.00	0	0	66599	66599
411D00	ENGINEERING SUPPORT TYPE 2 STORAGE	249020	0.00	0	0	48294	48294
412100	ENGINEERING DURING CONSTRUCTION	685454	0.00	0	0	132864	132864
412200	CRACK SURVEY ENGINEERING ANALYSIS	53613	24.10	12921	632	4698	18253
430000	CONSTRUCTION MANAGEMENT (FFS)	1165827	10.00	116582	33936	255199	405718
441100	CONTAINER RACK/LINER ASSY	173745	13.33	23163	1258	34856	59278
441101	CONTAINERS RESTRAINTS	249843	23.00	57463	0	61154	118617
441102	LINER BASE FRAME	47564	23.00	10939	0	11642	22581
441103	CONTAINER BASE FRAME	69585	23.00	16004	0	17032	33036
441104	SUMP PUMP SUPPORT	13154	23.00	3025	0	3219	6245
441105	LEAK DETECTOR SUPPORT	34997	12.98	4541	610	7868	13020
441106	LEVELING BASE ASSEMBLY	254858	23.00	58617	0	50477	109095
441210	MOCKUP & TESTING	155461	7.21	11203	2832	31017	45053
441220	INSTALL SUPPORT FRAMES	64114	3.43	2199	418	11691	14309
441230	INSTALL ANCHORING FOR SPPRT FRAMES	7747	10.00	774	224	1695	2695
441240	INSTALL LINERS & SUPPORT RACKS	18545	10.00	1854	162	1480	3496
441250	PLUG CELL DRAIN	15804	10.00	1580	361	3459	5401
441310	LEAK DETECTION & ALARMS - LINERS	424782	10.00	42478	7869	92984	143332
441320	INSTALL LIQUID REMOVAL SYSTEM	13545	10.00	1354	219	2965	4538
441330	FUNCTIONAL TESTING	118513	6.50	7707	2152	16872	26732
442100	LINERS & SUPPORT RACK(SUBCONTRACT)	522808	22.42	117196	429	125641	243267
442104	SUMP PUMP SUPPORT	6608	23.00	1519	0	1617	3137
442105	LEAK DETECTOR SUPPORT	81770	0.74	607	0	16393	17000
442310	MOCK-UP & TESTING	112405	7.66	8609	2427	24081	35119

WBS	DESCRIPTION	DIRECT SUBTOTAL	CONSTRUCTION %	MGMT/ADMIN TOTAL	DYNCORP EQUIP	SITE INDIRECTS	TOTAL INDIRECTS
442320	INSTALL CONT LINER & SUPPORT RACK	632012	10.00	63201	4061	87381	154643
442410	PARTICULATE REMOVAL SYSTEM	30323	8.47	2567	649	5619	8836
442420	WATER ADDITION & COOLING SYSTEM	427218	10.51	44887	7284	93629	145801
442430	ION-EXCHANGE SYSTEM	236762	10.00	23676	3550	51719	78946
442440	WET POOL PLATFORM -LOWER LEVEL	32364	16.93	5478	105	7423	13006
442610	FAB COVER BLOCKS - POOL	51000	20.21	10308	0	12200	22509
442620	INSTALLATION OF NEW COVER BLOCKS	19666	6.86	1348	311	3752	5411
442630	INSTALLATION OF PROTECTIVE FRAME	32197	21.22	6833	80	7444	14358
442710	LEAK DETECTION & ALARM - 2 ND LINER	110955	10.00	11095	2126	24288	37509
442720	INSTALL OF LIQUID REMOVAL SYSTEM	1155	10.00	115	33	252	401
442730	FUNCTIONAL TESTING	39072	6.58	2569	717	8286	11573
4428	OLD COVER BLOCK REMOVAL & DISPOSAL	159719	9.80	15651	368	25864	41884
443110	FAB & INSTALL WATER FEED LINE	67564	9.75	6588	860	14609	22057
443120	FAB & INSTALL SPRINKLER SYSTEM	203324	15.76	32049	130	19498	51677
443200	221-T CANYON DRY STANDPIPE SYSTEM	666162	4.65	30955	5218	80259	116433
443300	221-T CANYON ALARMS	1125158	7.70	86685	21651	235783	344120
445100	HELIUM PURGE SYSTEM MODS	37932	10.00	3793	841	8303	12938
445200	OPERATIONS MONITORING (CAMERA) MODS	200483	9.36	18769	3657	43557	65983
445300	WATER ADDITION SYSTEM	6275	23.00	1443	0	1535	2978
445410	LOAD CELL PROCUREMENT	31075	23.00	7147	0	2030	9178
445420	HOOK EXTENTION MOD/INSTALL	32758	23.00	7534	0	2107	9642
445430	LOAD CELL/HOOK EXTEN STORAGE RACK	16309	19.99	3259	93	1597	4951
445500	STACK MONITORS	203207	8.07	16399	2042	40788	59230
445600	221-T RADIATION MONITORS	126180	7.97	10059	2656	25208	37924
450010	TITLE III INSPECTION-CDR/DESIGN(FH)	13143	0.00	0	0	2615	2615
450020	TITLE III INSPECTION-CONST/TEST(FH)	113552	0.00	0	0	22596	22596
460010	OTHER PROJECT COSTS(FH) FY01	2142647	0.00	0	0	426386	426386
460020	OTHER PROJECT COSTS(FH) FY02	1302014	0.00	0	0	259100	259100
460030	OTHER PROJECT COSTS(FH) FY03	935230	0.00	0	0	186110	186110
460040	OTHER PROJECT COSTS(FH) FY04	358997	0.00	0	0	71440	71440
500010	PROJECT MANAGEMENT FY01 (FH)	686784	0.00	0	0	136670	136670
500020	PROJECT MANAGEMENT FY02 (FH)	960711	0.00	0	0	191181	191181
500030	PROJECT MANAGEMENT FY03 (FH)	844291	0.00	0	0	168013	168013
500040	PROJECT MANAGEMENT FY04 (FH)	434965	0.00	0	0	86558	86558
PROJECT TOTAL		25,107,065		912,762	109,978	4,953,657	5,976,398

SUMMARY ROM ESTIMATE

OUTYEAR FACILITY SUPPORT FOR SLUDGE STORAGE MISSION

ACTIVITY	FY02	FY03	FY04	FY05
Construction Support	414777	677824		
Receive Sludge		254000	1320000	848000
Misc. Readiness Preps	70000	70000		
Develop Technical Description	44000	44000		
Develop Plan of Action (POA)	44000	44000		
Develop Readiness Plan	45000	45000		
Develop Checklist	45000	45000		
Readiness Coach	50000	50000		
Develop Procedures	36000	54000		
Develop Training and Train Workers	34000	64000		
Implement SAR	32000	42000		
Perform Self Assessment	90000	140000		
Correct Deficiencies	60000	85000		
Contractor Readiness	105000		165000	
Correct Prestarts		70000	130000	
DOE Readiness		38000	38000	
Correct Prestarts		110000	110000	
Env Compliance Support to Operations	90,000	90,000	90,000	
TOTAL FACILITY SUPPORT/SLUDGE	**1159777**	**1922824**	**1853000**	**848000**

APPENDIX C

PROJECT SCHEDULES

Summary Level Schedule ..... C-1 through C-2

Detail Level Schedule ..... C-3 through C-9

Spending Profile C-10

Activity ID	Orig Dur	Rem Dur	%	Early Start	Early Finish
MILESTONES					
40.10.1	0	0	0		30SEP02*
40.10.3	0	0	0	31DEC02*	
43301	0	0	0		28NOV03*
40.10.4	0	0	0		27FEB04*
+ 4.1.1.1 DESIGN TYPE 1 CANISTER STORAGE					
	130	130	0	02APR01	28SEP01
+ 4.1.1.2 DESIGN TYPE 2 CONTAINER STORAGE					
	183	183	0	01OCT01	12JUN02
+ 4.1.1.6 DESIGN FIRE PROTECTION UPGRADE					
	175	175	0	01MAY01	31DEC01
+ 4.1.2.1 TITLE III ENGINEERING					
	565	565	0	01OCT01	28NOV03
+ 4.4.1 CELL UPGRADES FOR TYPE 1 CONTAINERS					
	260	260	0	01OCT01	27SEP02
+ 4.4.2 POOL UPGRADES FOR TYPE 2 CONTAINERS					
	363	363	0	13JUN02	03NOV03
+ 4.4.3.1 271-T BUILDING SPRINKLER SYSTEM					
	254	254	0	13JUN02	03JUN03
+ 4.4.3.2 221-T CANYON DRY STANDPIPE SYSTEM					
	242	242	0	13JUN02	16MAY03
+ 4.4.3.3 221-T CANYON ALARMS					
	381	381	0	13JUN02	27NOV03

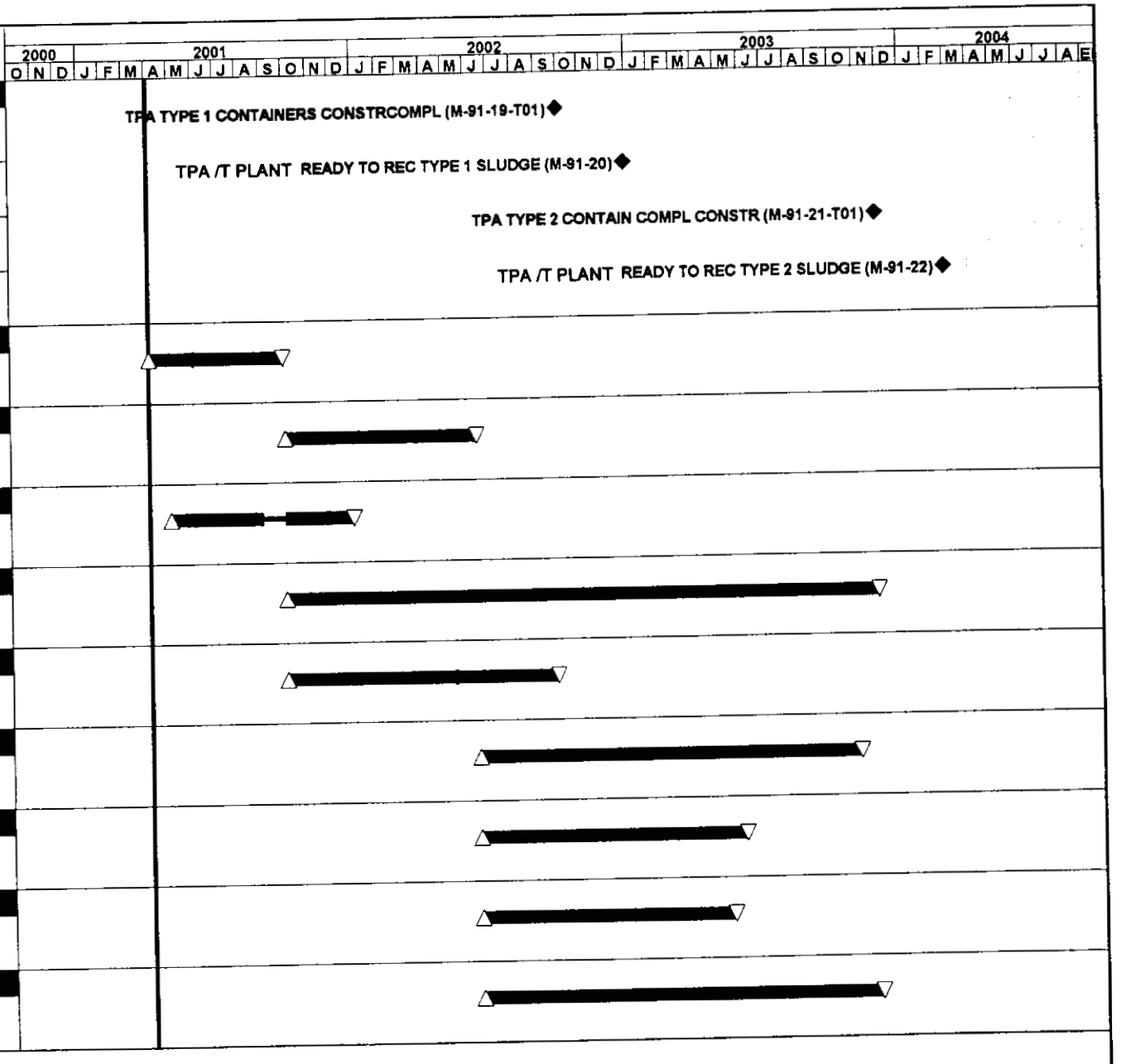

Start Date 01OCT00
Finish Date 30JUN04
Data Date 02APR01
Run Date 29MAR01 08:13

Early Bar
Progress Bar
Critical Activity

TPLN

Sheet 1 of 2

FLUOR FEDERAL SERVICES

SLUDGE HANDLING SYSTEM
Summary Level

Date	Revision	Checked	Approved

© Primavera Systems, Inc.

C-1

Activity ID	Orig Dur	Rem Dur	%	Early Start	Early Finish
+ INTERFACE ACTIVITIES					
	626	626	0	01OCT01	23FEB04
+ CONTAINERS					
	738	738	0	03SEP01	30JUN04
+ PROJECT SUPPORT					
	889	759	1	02OCT00A	26FEB04
+ ACCPETANCE INSPECTION					
	525	525	0	01OCT01	03OCT03
+ PROJECT MANAGEMENT					
	848	848	0	02APR01	30JUN04

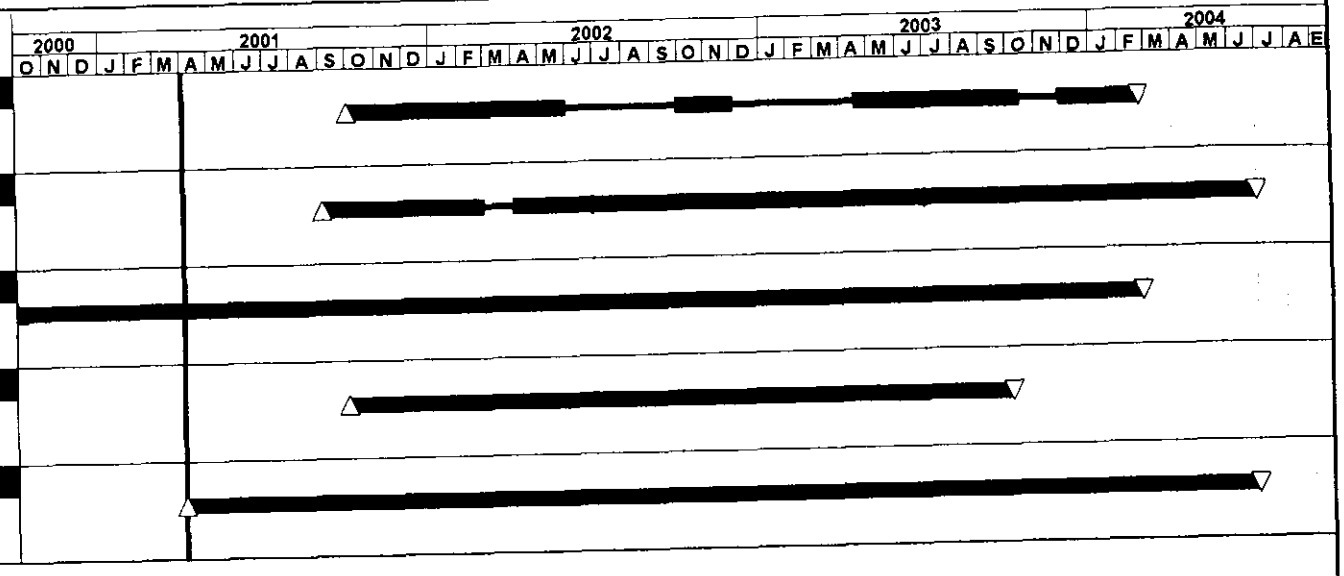

Start Date 01OCT00
Finish Date 30JUN04
Data Date 02APR01
Run Date 29MAR01 08:13

Early Bar
Progress Bar
Critical Activity

TPLN

Sheet 2 of 2

FLUOR FEDERAL SERVICES

SLUDGE HANDLING SYSTEM
Summary Level

Date	Revision	Checked	Approved

© Primavera Systems, Inc.

Activity ID	Orig Dur	Rem Dur	%	Early Start	Early Finish
MILESTONES					
40.10.1	0	0	0		30SEP02*
40.10.3	0	0	0	31DEC02*	
43301	0	0	0		28NOV03*
40.10.4	0	0	0		27FEB04*
4.1.1.1 DESIGN TYPE 1 CANISTER STORAGE					
411005	10	10	0	02APR01*	13APR01
411010	10	10	0	16APR01	27APR01
411040	80	80	0	30APR01	17AUG01
411030	45	45	0	30APR01	29JUN01
411025	42	42	0	30APR01	26JUN01
411020	30	30	0	30APR01	08JUN01
411035	30	30	0	30APR01	08JUN01
411015	67	67	0	10MAY01	10AUG01
411012	0	0	0		01JUN01*
411045	10	10	0	20AUG01	31AUG01
411050	10	10	0	03SEP01	14SEP01
411055	10	10	0	17SEP01	28SEP01
4.1.1.2 DESIGN TYPE 2 CONTAINER STORAGE					
412005	133	133	0	01OCT01*	03APR02

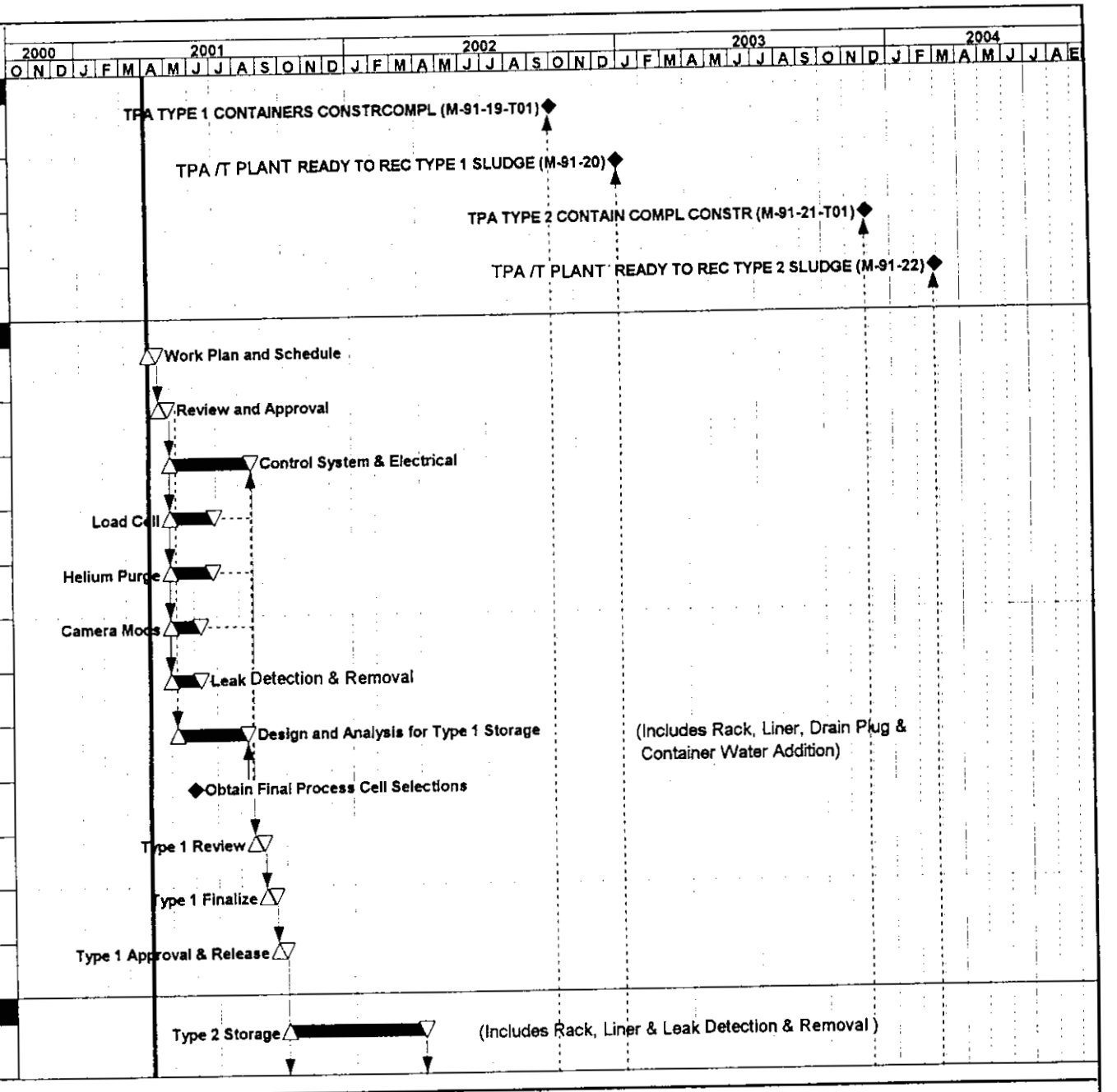

Start Date	01OCT00
Finish Date	30JUN04
Data Date	02APR01
Run Date	29MAR01 08:18

Early Bar
Progress Bar
Critical Activity

TPLN

Sheet 1 of 7

FLUOR FEDERAL SERVICES
SLUDGE HANDLING SYSTEM
Detail Level

Date	Revision	Checked	Approved

© Primavera Systems, Inc.

Activity ID	Orig Dur	Rem Dur	%	Early Start	Early Finish
4.1.1.2 DESIGN TYPE 2 CONTAINER STORAGE					
412020	124	124	0	01OCT01*	21MAR02
412015	62	62	0	01OCT01*	25DEC01
412010	20	20	0	04APR02	01MAY02
412025	20	20	0	02MAY02	29MAY02
412030	10	10	0	30MAY02	12JUN02
4.1.1.6 DESIGN FIRE PROTECTION UPGRADE					
4116025	43	43	0	01MAY01*	28JUN01
4116030	46	46	0	29JUN01	31AUG01
4116035	66	66	0	01OCT01	31DEC01
4116055	42	42	0	01OCT01*	27NOV01
4116005	40	40	0	01OCT01*	23NOV01
4.1.2.1 TITLE III ENGINEERING					
4116050	565	565	0	01OCT01*	28NOV03
4.4.1 CELL UPGRADES FOR TYPE 1 CONTAINERS					
20.10.1	24	24	0	01OCT01*	01NOV01
40.10.175	45	45	0	01OCT01	30NOV01
20.10.100	22	22	0	02NOV01	03DEC01
40.10.180	41	41	0	03DEC01	28JAN02
20.10.105	31	31	0	04DEC01	15JAN02

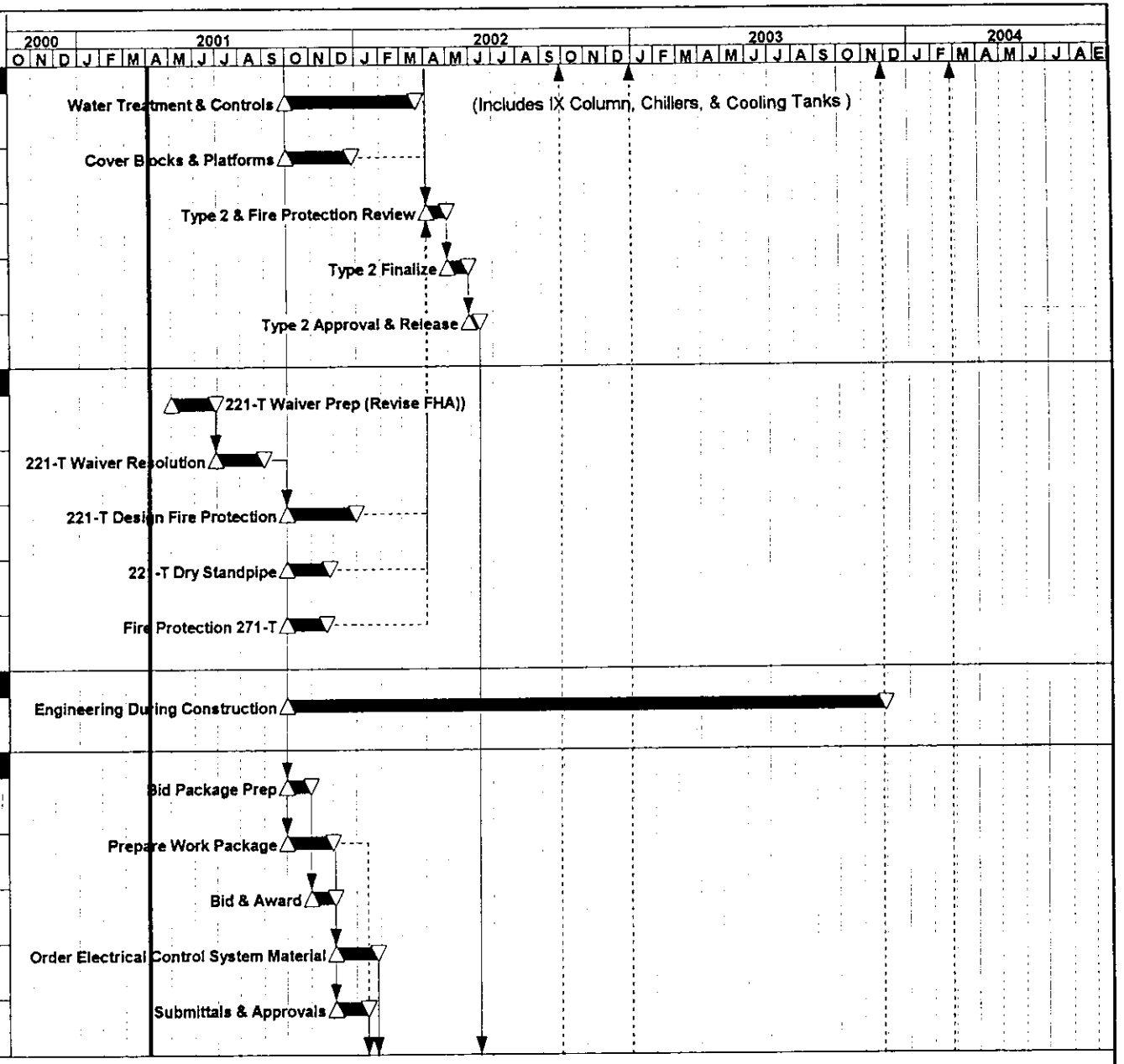

Start Date	01OCT00
Finish Date	30JUN04
Data Date	02APR01
Run Date	29MAR01 08:19

Early Bar
Progress Bar
Critical Activity

TPLN

Sheet 2 of 7

FLUOR FEDERAL SERVICES
SLUDGE HANDLING SYSTEM
Detail Level

Date	Revision	Checked	Approved

© Primavera Systems, Inc.

Activity ID	Orig Dur	Rem Dur	%	Early Start	Early Finish
4.4.1 CELL UPGRADES FOR TYPE 1 CONTAINERS					
20.10.110	118	118	0	16JAN02	28JUN02
40.10.1000	30	30	0	16JAN02	26FEB02
40.10.145	20	20	0	16JAN02	12FEB02
40.10.155	48	48	0	16JAN02	22MAR02
40.10.185	130	130	0	29JAN02	29JUL02
40.10.150	20	20	0	27FEB02	26MAR02
40.10	0	0	0		14MAY02*
40.10.115	11	11	0	15MAY02	29MAY02
40.10.120	21	21	0	30MAY02	27JUN02
40.10.160	9	9	0	03JUN02	13JUN02
40.10.125	55	55	0	01JUL02	13SEP02
40.10.135	10	10	0	16SEP02	27SEP02
4.4.2 POOL UPGRADES FOR TYPE 2 CONTAINERS					
40.20.020	20	20	0	13JUN02	10JUL02
40.20.230	22	22	0	13JUN02	12JUL02
40.20.025	23	23	0	11JUL02	12AUG02
40.20.055	24	24	0	11JUL02	13AUG02
40.20.060	44	44	0	11JUL02	10SEP02

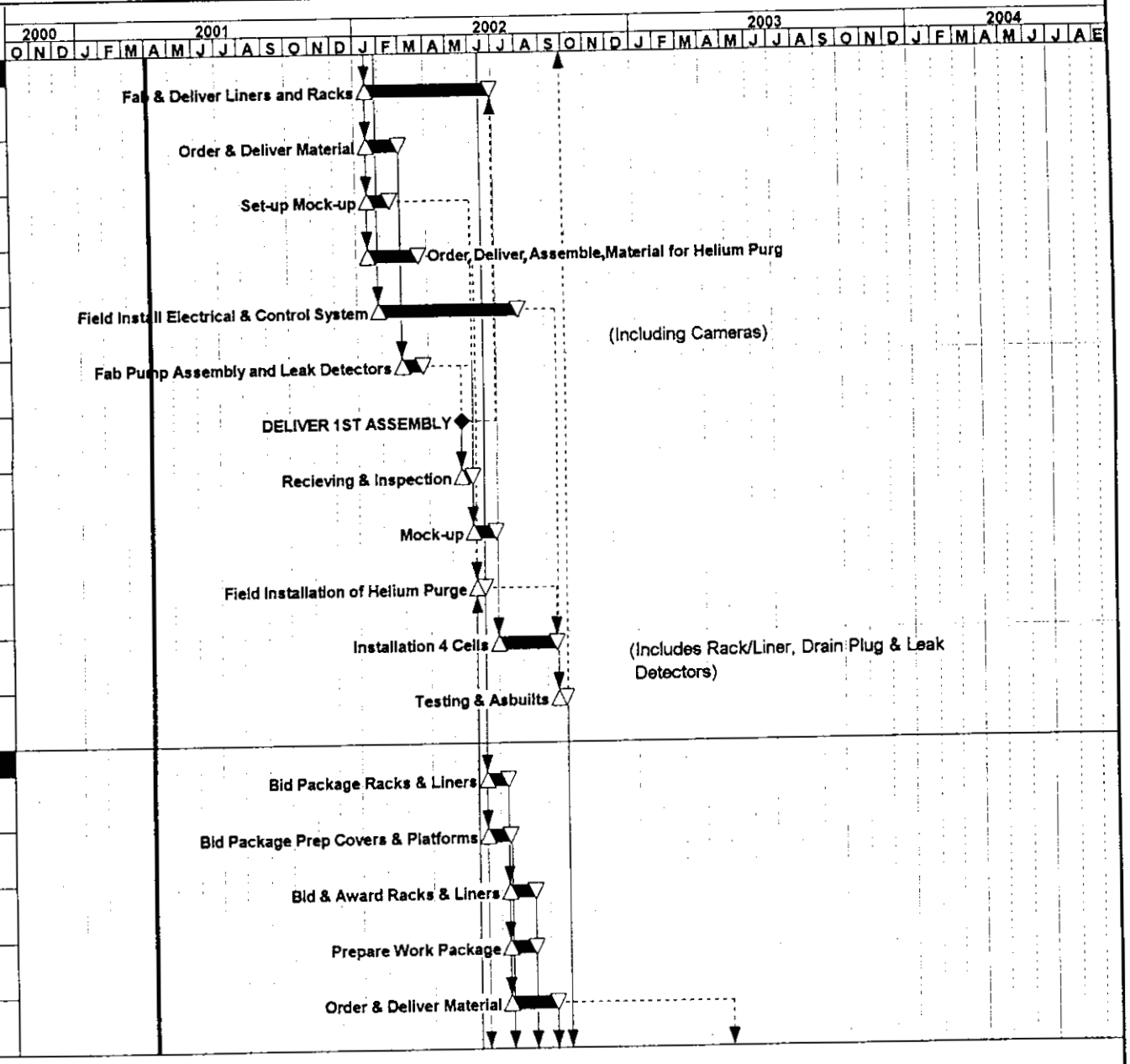

Start Date	01OCT00
Finish Date	30JUN04
Data Date	02APR01
Run Date	29MAR01 08:19

Early Bar
Progress Bar
Critical Activity

TPLN

Sheet 3 of 7

FLUOR FEDERAL SERVICES
SLUDGE HANDLING SYSTEM
Detail Level

Date	Revision	Checked	Approved

© Primavera Systems, Inc.

Activity ID	Orig Dur	Rem Dur	%	Early Start	Early Finish
4.4.2 POOL UPGRADES FOR TYPE 2 CONTAINERS					
40.20.235	42	42	0	15JUL02	10SEP02
40.20	62	62	0	13AUG02	06NOV02
40.20.065	60	60	0	11SEP02	03DEC02
40.20.240	62	62	0	11SEP02	05DEC02
40.20.225	50	50	0	11SEP02	19NOV02
40.20.030	109	109	0	07NOV02	08APR03
40.20.070	131	131	0	04DEC02	04JUN03
40.20.245	62	62	0	06DEC02	03MAR03
40.20.035	15	15	0	09APR03	29APR03
40.20.040	18	18	0	30APR03	23MAY03
40.20.045	53	53	0	26MAY03	06AUG03
40.20.215	40	40	0	07AUG03	01OCT03
40.20.050	23	23	0	02OCT03	03NOV03
4.4.3.1 271-T BUILDING SPRINKLER SYSTEM					
431005	20	20	0	13JUN02	10JUL02
431050	42	42	0	13JUN02	09AUG02
431010	20	20	0	11JUL02	07AUG02
431015	20	20	0	08AUG02	04SEP02

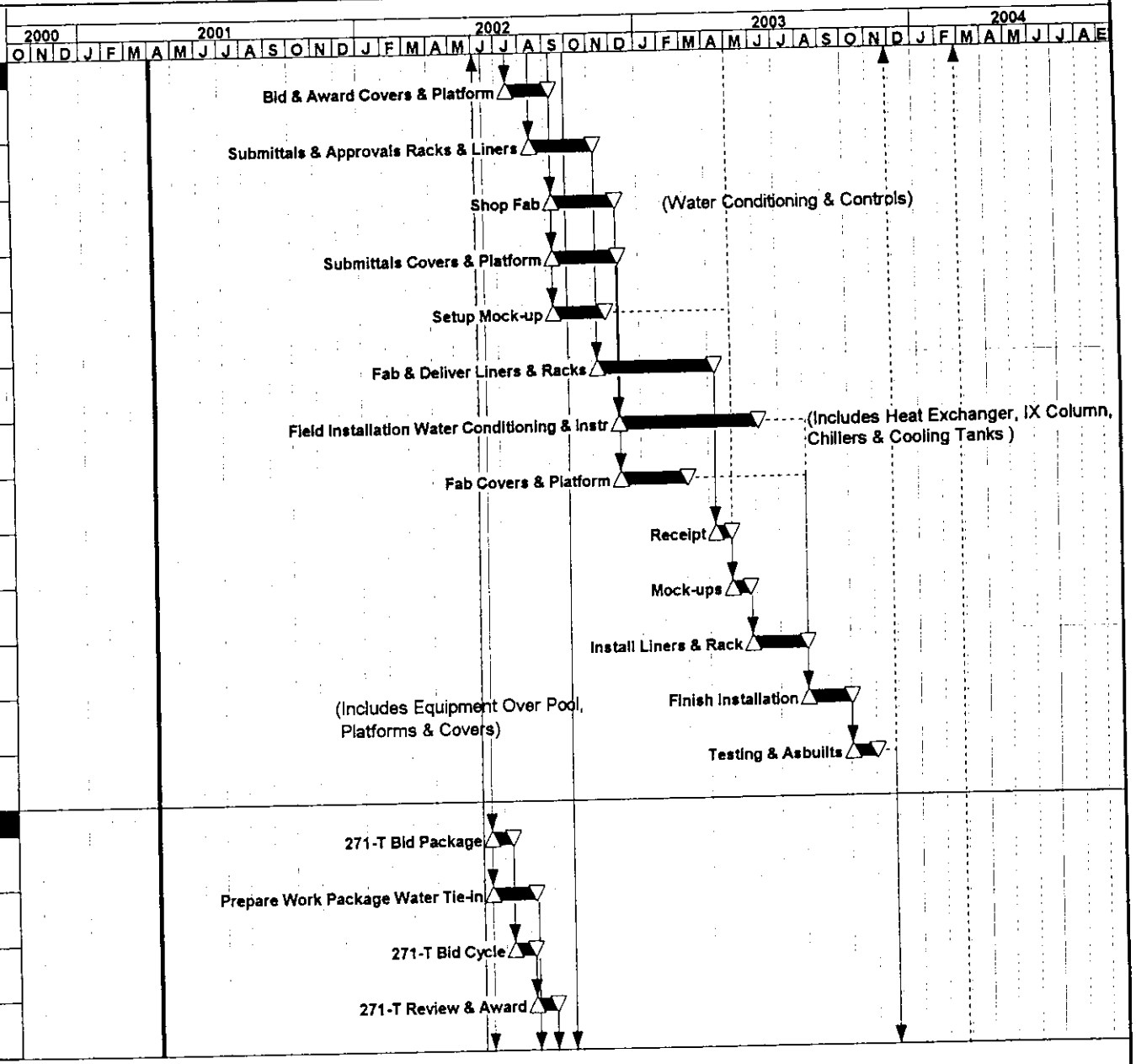

Start Date 01OCT00
Finish Date 30JUN04
Data Date 02APR01
Run Date 29MAR01 08:19

Early Bar
Progress Bar
Critical Activity

TPLN

Sheet 4 of 7

FLUOR FEDERAL SERVICES
SLUDGE HANDLING SYSTEM
Detail Level

Date	Revision	Checked	Approved

© Primavera Systems, Inc.

Activity ID	Orig Dur	Rem Dur	%	Early Start	Early Finish
4.4.3.1 271-T BUILDING SPRINKLER SYSTEM					
431055	42	42	0	12AUG02	08OCT02
431020	30	30	0	05SEP02	16OCT02
4031055	62	62	0	09OCT02	02JAN03
431025	42	42	0	17OCT02	13DEC02
433015	45	45	0	16DEC02	14FEB03
431030	20	20	0	16DEC02	10JAN03
431035	62	62	0	13JAN03	08APR03
431040	20	20	0	09APR03	06MAY03
431045	20	20	0	07MAY03	03JUN03
4.4.3.2 221-T CANYON DRY STANDPIPE SYSTEM					
432005	22	22	0	13JUN02	12JUL02
432010	22	22	0	15JUL02	13AUG02
432015	176	176	0	14AUG02	16APR03
432020	22	22	0	17APR03	16MAY03
4.4.3.3 221-T CANYON ALARMS					
433005	20	20	0	13JUN02	10JUL02
433050	30	30	0	11JUL02	21AUG02
433010	150	150	0	22AUG02	19MAR03
433025	80	80	0	22AUG02	11DEC02

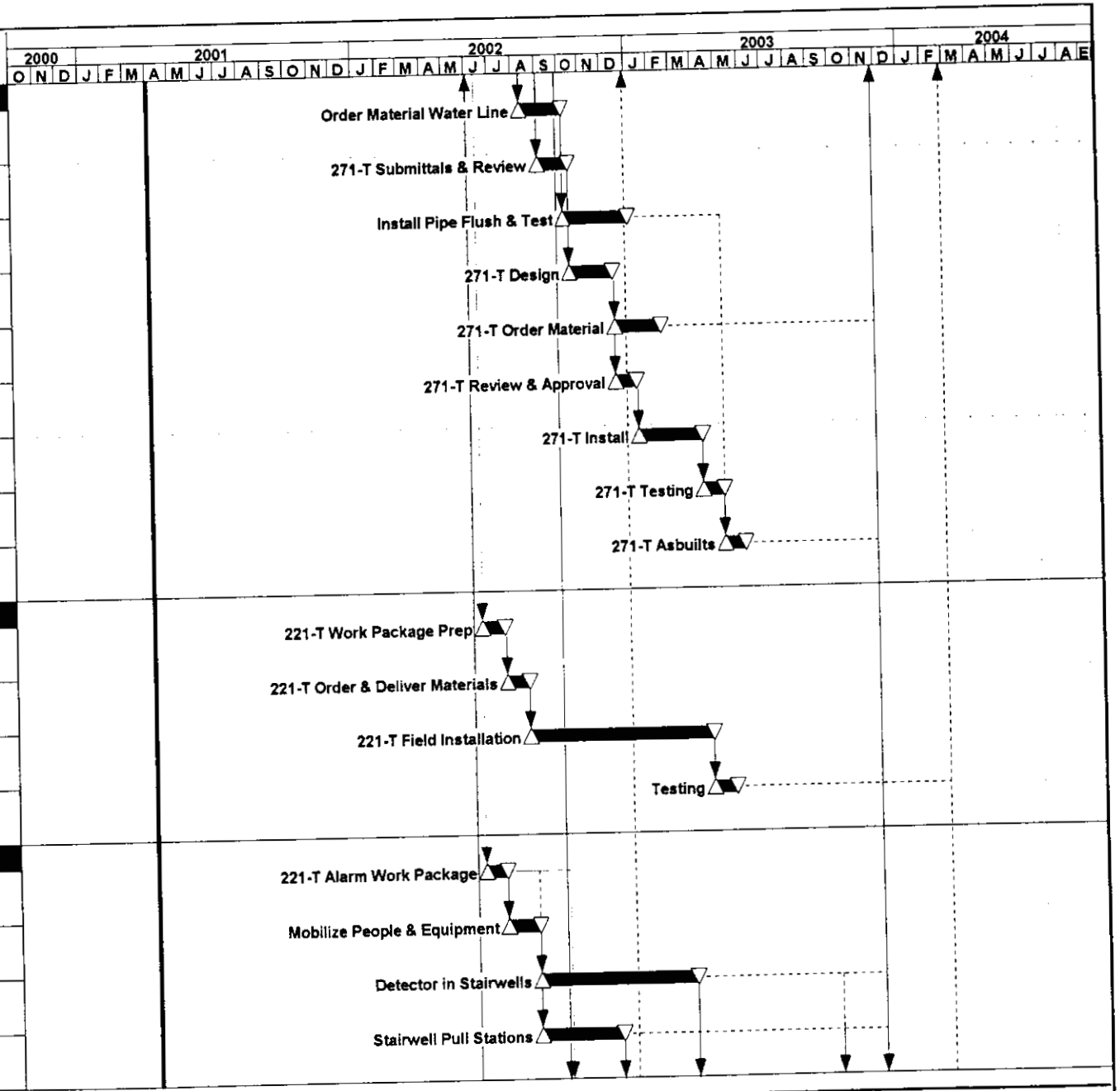

Start Date 01OCT00
Finish Date 30JUN04
Data Date 02APR01
Run Date 29MAR01 08:19

Early Bar
Progress Bar
Critical Activity

TPLN

Sheet 5 of 7

FLUOR FEDERAL SERVICES
SLUDGE HANDLING SYSTEM
Detail Level

Date	Revision	Checked	Approved

© Primavera Systems, Inc.

Activity ID	Orig Dur	Rem Dur	%	Early Start	Early Finish
4 4 3.3 221-T CANYON ALARMS					
433045	32	32	0	03OCT02	15NOV02
433040	227	227	0	18NOV02	30SEP03
433035	90	90	0	12DEC02	16APR03
433020	90	90	0	20MAR03	23JUL03
433030	22	22	0	01OCT03	30OCT03
433065	20	20	0	31OCT03	27NOV03
INTERFACE ACTIVITIES					
40.10.170	152	152	0	01OCT01*	30APR02
40.10.165	23	23	0	01MAY02	31MAY02
40.10.140	46	46	0	30SEP02	02DEC02
40.10.190	132	132	0	15APR03*	15OCT03
40.20.190	62	62	0	28NOV03	23FEB04
CONTAINERS					
40.30.005	129	129	0	03SEP01*	28FEB02
40.30.010	588	588	0	01APR02*	30JUN04
40.30.020	0	0	0		28JUN02*
40.30.030	0	0	0		30JUN03*
PROJECT SUPPORT					
40.40.080	85	130	0	02OCT00A	28SEP01

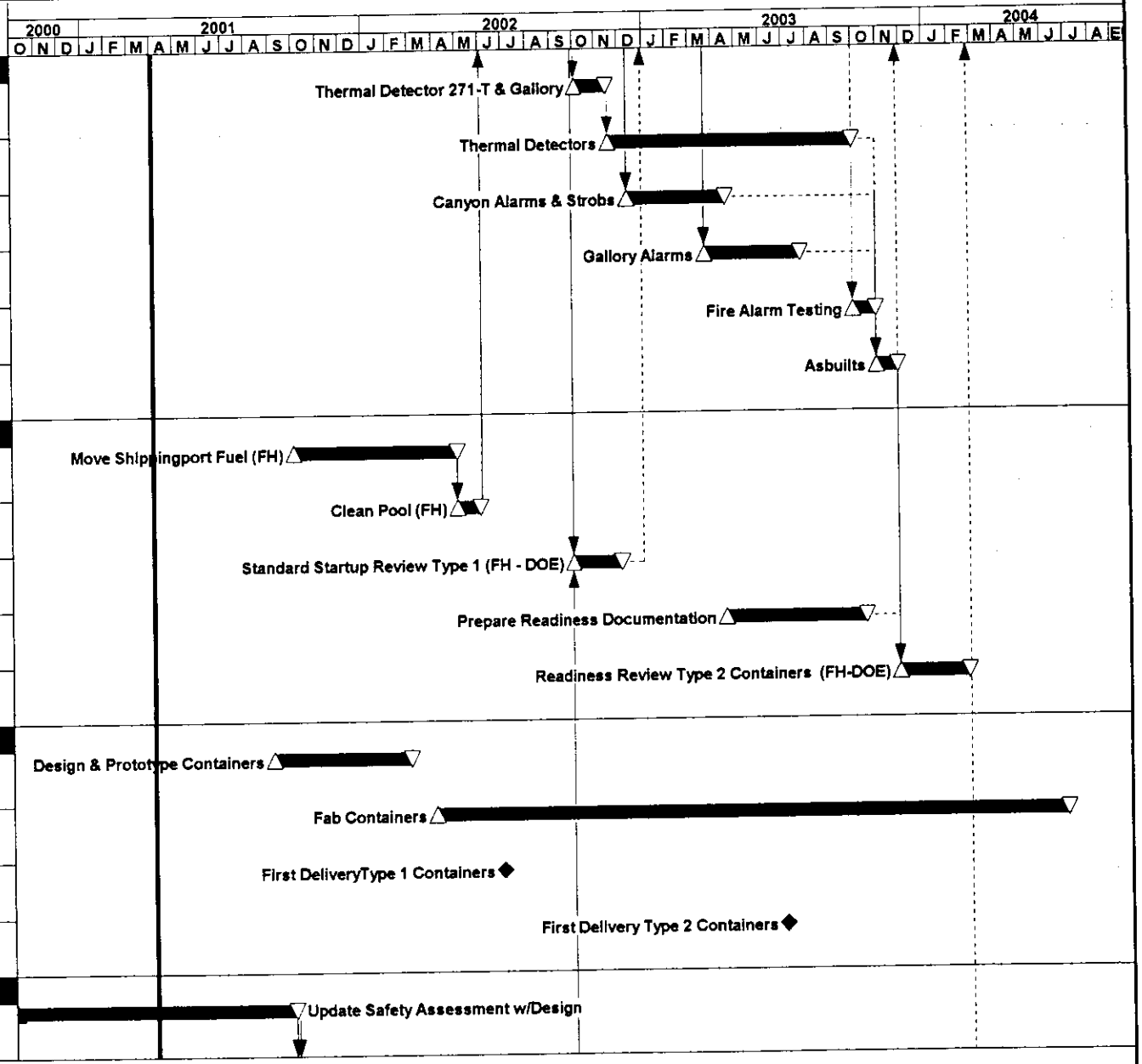

Start Date	01OCT00
Finish Date	30JUN04
Data Date	02APR01
Run Date	29MAR01 08:19

Early Bar
Progress Bar
Critical Activity

TPLN

Sheet 8 of 7

FLUOR FEDERAL SERVICES
SLUDGE HANDLING SYSTEM
Detail Level

Date	Revision	Checked	Approved

© Primavera Systems, Inc.

Activity ID	Orig Dur	Rem Dur	%	Early Start	Early Finish
PROJECT SUPPORT					
40.40.060	65	65	0	02OCT00A	29JUN01
40.40.050	65	130	0	02OCT00A	28SEP01
40.40.020	154	43	72	02OCT00A	30MAY01
40.40.040	15	35	0	02OCT00A	18MAY01
40.40.120	43	0	100	02OCT00A	30MAR01A
40.40.030	65	65	0	01JAN01A	29JUN01
40.40.010	759	759	0	02APR01	26FEB04
40.40.070	65	65	0	02JUL01	28SEP01
40.40.100	196	196	0	28SEP01	28JUN02
40.40.090	129	129	0	02OCT01	29MAR02
40.40.110	66	66	0	28JUN02	27SEP02
ACCPETANCE INSPECTION					
40.40.130	525	525	0	01OCT01*	03OCT03
PROJECT MANAGEMENT					
40.40.005	848	848	0	02APR01	30JUN04

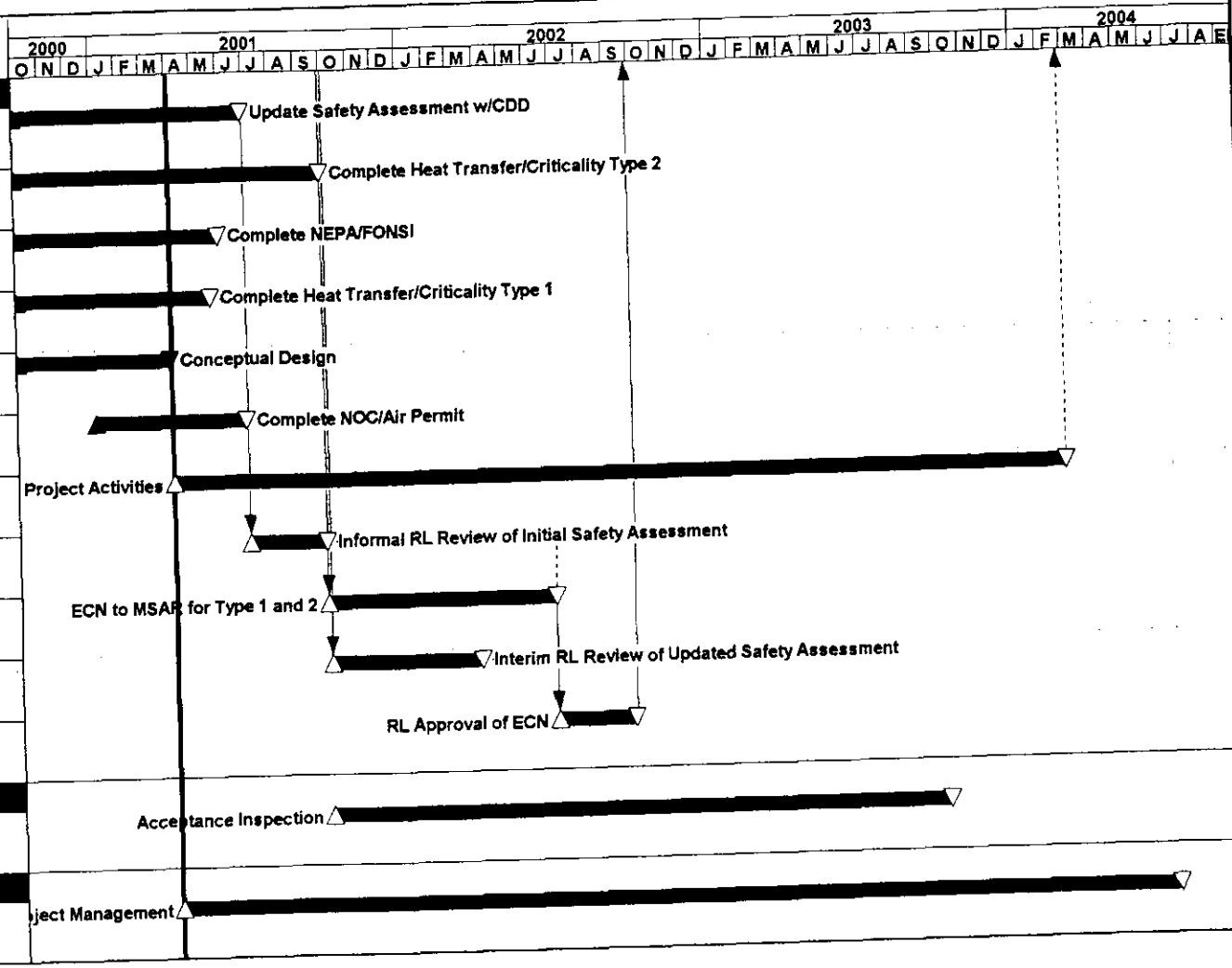

Start Date	01OCT00
Finish Date	30JUN04
Data Date	02APR01
Run Date	29MAR01 08:19

Early Bar
Progress Bar
Critical Activity

TPLN

Sheet 7 of 7

FLUOR FEDERAL SERVICES
SLUDGE HANDLING SYSTEM
Detail Level

Date	Revision	Checked	Approved

© Primavera Systems, Inc.

Sludge Handling System
Spending Profile

	Total Cost	FY 2001				FY 2002				FY 2003				FY 2004			
		1	2	3	4	1	2	3	4	1	2	3	4	1	2	3	4
Containers	10131			450			2045				3000			4636			
Definitive Design	2036			941			1095										
Eng/Inspection	1079						454				475			150			
Cell Upgrades for Type I	3235						3235										
Pool Upgrades for Type II	4997							100			4697			200			
Fire Protection Upgrades	3950							650			2948			352			
Other Upgrades	1290						1290										
Acceptance Inspection	180				10		73				82			15			
Other Project Costs	6456		2569				1921				1414			552			
Project Management	4046		823				1359				1223			641			
Totals BO	37,400		4,793				12,222				13,839			6,546			

Dollars in Thousands (000)

4/2/01

APPENDIX D

OUTLINE SPECIFICATION

Outline Specification

Table of Contents

DIVISION 3 - CONCRETE

Section 03200 Concrete Reinforcement
Section 03300 Cast-In-Place Concrete

DIVISION 5 - METALS
Section 05055 Expansion Anchor Installations
Section 05120 Structural Steel
Section 05500 Metal Fabrications
Section 05555 Stainless Steel Pit Liner
Section 05600 Special Metal Fabrications

DIVISION 7 - THERMAL AND MOISTURE PROTECTION

Section 07900 Joint Sealers

DIVISION 9 - FINISHES

Section 09805 Special Protective Coating
Section 09900 Painting

DIVISION 13 - SPECIAL CONSTRUCTION

Section 13440 Instrumentation

DIVISION 14 - CONVEYING SYSTEMS

Section 14600 Hoists and Cranes

DIVISION 15 – MECHANICAL

Section 15300 Fire Protection Sprinkler Systems
Section 15493 Chemical Process Piping Systems
Appendix A M-9 Piping Code

DIVISION 16 - ELECTRICAL

Section 16400 Low-Voltage Distribution
Section 16721 Fire Protection Alarm Systems

SLUDGE HANDLING SYSTEM

Outline Specification

SECTION 03200 – CONCRETE REINFORCEMENT

PART 2 - PRODUCTS

2.2 MATERIALS

2.2.1 Welded Wire Fabric: ASTM A 185, of sizes and mesh dimensions shown on the Drawings.

2.2.2 Reinforcing Steel: ASTM A 615/A 615 M, minimum yield level of Grade 60 round bars, deformed, except where noted otherwise on the Drawings.

2.2.3 Chairs for Support of Reinforcement: Class A welded-wire units or precast concrete blocks.

2.2.5 Tie Wire: ASTM A 853-carbon steel, 1.6 mm (16 gage) minimum, annealed.

SECTION 03300 - CAST-IN-PLACE CONCRETE

PART 2 - PRODUCTS

2.2 MATERIALS

2.2.1 Concrete

2.2.1.1 Cement: ASTM C 150, Type II (low alkali). Fly Ash content is allowable in accordance with recommendations of 40 CFR 249.12 and 249.13.

2.2.1.2 Aggregates: ASTM C 33, 38 mm (1-1/2 inch) maximum size.

2.2.1.3 Air-entraining admixture: ASTM C 260; Sika Chemical Company "SIKA AER," Chem-Masters Corporation "Adz-Air," or Protex Industries "AES."

2.2.1.4 Properties:

a. Minimum allowable compressive strength: 3000 lb/in^2 at 28 days.
b. Slump: 100 mm (4 inches) in accordance with ACI 301, Section 3.5.
c. Air content: In accordance with ACI 301, Table 3.4.1.
d. Proportions: In accordance with ACI 301, Sections 3.8 and 3.9, and ASTM C 94.

2.2.3 Reinforcing Steel

2.2.3.1 Steel bars: ASTM A 615, deformed, Grade 60.

2.2.3.2 Welded-wire fabric: ASTM A 185.

2.2.3.3 Tie wire: ASTM A 853-carbon steel, 1.6 mm (16-gage) minimum, annealed.

2.2.4 Joint Materials

2.2.4.1 Expansion joint filler: See Section 07900.

2.2.4.2 Sealant: See Section 07900, Type II.

2.2.5 Nonshrink Grout: ASTM C 1107; Sika Corporation "Sika Grout 212," or Master Builders "Masterflow 713."

2.2.6 Forms: Wood, steel, plywood, or Masonite Corporation "Concrete Form Presdwood," as required for various specified finishes.

2.2.7 Form Coating Materials: Symons Corporation "Magic Kote," AC Horn Incorporated "Form Shield," or Burke Company "Burke Release No. 1."

SECTION 05055 EXPANSION ANCHORS

PART 2 - PRODUCTS

2.2 MATERIALS

2.2.1 Expansion anchors: Hilti Fastening Systems "Kwik-Bolt II."

SECTION 05120 STRUCTURAL STEEL

PART 2 - PRODUCTS

2.2 MATERIALS

2.2.1 Rolled Steel Shapes and Plates: ASTM A 36.

2.2.2 Steel Bars and Rods: ASTM A 108, minimum yield 36,000 lb/in^2, maximum carbon content 0.35%.

2.2.3 Steel Tubing: ASTM A 500, Grade [A], [B], [C], or ASTM A 501.

2.2.4 Steel Pipe: ASTM A 53, Type E or S, Grade B.

2.2.5 Fasteners

2.2.5.1 Fasteners shall have a Class 2 fit.

2.2.5.2 Bolts:

a. For general application: ASTM A 307, Grade A or B.
b. For permanent structural steel column and beam connections: ASTM A 325, Type 1, plain (noncoated) or galvanized; or ASTM A 490, Type 1 or 2.

2.2.5.3 Nuts:

a. For ASTM A 307 bolts: ASTM A 563, Grade A, heavy hex.
b. For ASTM A 325 plain (noncoated) bolts: ASTM A 563, Grade C, plain, heavy hex.
c. For ASTM A 325 galvanized bolts: ASTM A 563, Grade DH, galvanized, heavy hex.
d. For ASTM A 490 bolts: ASTM A 563, Grade DH, heavy hex.

2.2.5.4 Washers:

a. For ASTM A 325 or ASTM A 490 bolts: ASTM F 436, circular.
b. For ASTM A 307 bolts: ASME B18.21.1.

2.2.5.5 Expansion anchors: See Section 05055.

2.2.5.6 Weld studs: Nelson Stud Welding Company Type [CPL], [H4L], [S3L].

2.2.6 Welding Electrodes: E70XX.

2.2.7 Nonshrink Grout: Nonmetallic type; US Grout Corporation "Five Star Grout," Hallemite "Por-Rok" Anchoring Cement, or Master Builders "Masterflow 713."

2.2.8 Paint:: See Section 09900.

<u>SECTION 05500</u> METAL FABRICATIONS

PART 2 - <u>PRODUCTS</u>

2.2 MATERIALS

2.2.1 Rolled Steel Shapes, Plates, and Bars: ASTM A 36.

2.2.2 Steel Pipe: ASTM A 53 (black), standard weight, Schedule 40.

2.2.3 Steel Tubing: ASTM A 500, Grade B.

2.2.4 Fasteners

2.2.4.1 Bolts: ASTM A 307, Grade A or B.

2.2.4.2 Nuts: ASTM A 563, Grade A, heavy hex.

2.2.4.3 Washers: ASTM F 844, circular.

2.2.4.4 Expansion anchors: See Section 05055.

2.2.4.5 Weld studs: Nelson Stud Welding Company Type [CPL], [H4L], [S3L].

2.2.5 Welding Electrodes: E70XX.

2.2.6 Metal Grating: FS RR-G-661, Type I, [Class 1, Material S, hot-dip galvanized] [Class 1, Material SS] [Class 2, Material A]. Grating shall be plain surface type with end-banding bars, size shown on the Drawings. Provide manufacturer's standard clips for attachment to framing.

2.2.7 Paint:: See Section 09900.

2.2.8 Supports: Interchangeable channels, channel spring nuts, and bolts; Unistrut Corporation "Unistrut" or "B-Line"

2.2.8.1 Channels: 1-5/8 inches wide by [13/16] [1-3/8] [1-5/8] [3-1/4] inch(es) deep.

2.2.8.2 Channel spring nuts: Manufacturer's standard.

2.2.8.3 Bolts (for use with channel spring nuts): Manufacturer's standard.

2.2.9 Support Clamps (for rigid steel conduit): Manufacturer's standard.

<u>SECTION 05555</u> STAINLESS STEEL PIT LINER

PART 2 - <u>PRODUCTS</u>

2.2 MATERIALS

2.2.1 Stainless Steel Plate, Sheet, and Strip: ASTM A 240, Type 304L, fully annealed.

2.2.2 Stainless Steel Bars and Shapes: ASTM A 276, Type 304L, cold finished, fully annealed, sizes shown on the Drawings.

2.2.3 Concrete Anchors: ASTM A 108, low-carbon steel, headed stud type, Nelson Stud Welding Company Type H4L, length shown on the Drawings.

2.2.4 Filler Metal: AWS A5.4 [E 308L-15 or 16], or AWS A5.9 [ER 308L].

SECTION 05600 SPECIAL METAL FABRICATIONS

PART 2 - PRODUCTS

2.2 MATERIALS

2.2.1 Stainless Steel Sheet: ASTM A 167, Type 304L, fully annealed

2.2.2 Other stainless steel as shown on the Drawings.

2.2.3 Carbon Steel: ASTM A 36 or ASTM A 570 as shown on the Drawings.

SECTION 07900 JOINT SEALERS

PART 2 - PRODUCTS

2.2 MATERIALS

2.2.1 Sealants

2.2.1.1 Nonfirestopping:

a. Type I, 2-component polysulfide: FS TT-S-00227, Type II, nonsag type.
b. Type II, 1-component polysulfide: FS TT-S-00230, Type II, nonsag type.
c. Type III, polyurethane: FS TT-S-00227, Type I, Class A, multi-component, self-leveling type.
d. Caulking Compound: FS TT-C-00598, oil-base type.

2.2.1.2 Firestopping systems:

a. Sealant: RTV Silicone Foam; Semco "PR 855 RTV," Dow Corning "Type 3-6548 RTV," or General Electric "Type RTV 800."
b. Caulking compound: 3M Company "CP 25."
c. Putty: 3M Company "303."
d. Forming or damming: Manville Company "Marinite Board," "Cera Form Board," or "Cerachrome Blanket."

2.2.2.3 Firestopping devices: Listed in UL Fire Resistance Directory or FM Approval Guide for intended application.

2.2.3 Primer: Nonstaining type, recommended by manufacturer of sealant or caulking compound for intended application.

2.2.4 Backer Rod: Closed-cell polyethylene foam rod, approximately 25% larger than width of joint in which to be installed.

2.2.5 Expansion Joint Filler: ASTM D 994, or Watson Bowman & Acme Corporation "W" Series.

2.2.6 Bond Breaker Tape: Polyethylene tape with pressure-sensitive adhesive.

SECTION 09805 SPECIAL PROTECTIVE COATING

PART 2 - PRODUCTS

2.2 MATERIALS

2.2.1 General

2.2.1.1 Primers, thinners, and coating accessory materials shall be produced and approved for use by same manufacturer as finish coating system.

2.2.1.2 Field coatings shall be VOC compliant with a maximum volatile organic content of 350 g/L (2.9 lb/gal).

2.2.2 Filler and concrete surfacer: Epoxy-based filler or mastic. "Nu-Klad 114A" by Protective Coatings Division of Ameron; "Wall-Nu" by Steelcote Manufacturing Co.; or "Carboline 2011S" by Carboline Co.

2.2.3 Surface conditioner for galvanized metals: "Galvaprep SG" by Amchem Products or "Rustbond Penetrating Sealer" by Carboline Co.

2.2.4 Shop primer: Inorganic zinc primer. "Dimetcote Steel Primer 205" by Protective Coatings Division of Ameron; "MCU 2100, Type 5" by Steelcote Manufacturing Co.; or "Carbo Zinc 11" or "Carbo Zinc D7 WB" by Carboline Co.

2.2.5 Field primer for ferrous metals and carbon steel: Rust inhibitive epoxy-based primer. "Amercoat 385P" or "Amerlock 400" by Protective Coatings Division of Ameron; "Monomid Metal Primer" by Steelcote Manufacturing Co.; or "Carboline 893" by Carboline Co.

2.2.6 Primer for concrete surfaces: Minimum 95% solids epoxy-based coating. "Nu-Klad 105A" by Protective Coatings Division of Ameron; "Carboline 2011" by Carboline co.; or "Monomid Hibuild Intermediate" by Steelcote Manufacturing Co.

2.2.7 Primer for wallboard (sheetrock) or plaster: "Amerguard 335" by Protective Coatings Division of Ameron; "Monomid Hibuild Intermediate" by Steelcote Manufacturing Co.; or "Sanitile Sealer" by Carboline Co.

2.2.8 Base coat for concrete and concrete block: High-solids, epoxy-based coating. "Amerlock 400" or "Amercoat 351" by Protective Coatings Division of Ameron;

"Tile-X 3000" by Steelcote Manufacturing Co.; or "Carboline 893" by Carboline Co.

2.2.9 Finish coatings and top coats: Abrasive-resistant aliphatic polyurethane or siloxane or aliphatic type epoxy.

2.2.9.1 Aliphatic polyurethane: "Amershield" by Protective Coatings Division of Ameron; "Carbothane 134 HS" by Carboline Co.

2.2.9.2 Aliphatic epoxy: "Tile-X 3000" by Steelcote Manufacturing Co.

2.2.9.3 Siloxane epoxy: "PSX 700" by Protective Coatings Division of Ameron.

2.2.10 Abrasive-resistant concrete floor coatings: Hi-build, self-leveling epoxy. "Nu-Klad 120" by Protective Coatings Division of Ameron; "Color Top" by Steelcote Manufacturing Co.; or "Duochem 9400" by Carboline Co.

PART 3 - EXECUTION

3.5 COAT SCHEDULE

Coat	Description	Color	Minimum Dry Film Film (mils)
Ferrous Metals			
Shop Primer		Grey or red	12.7 (0.50)
Field Primer		Grey or off-white	178 (7.0)
Finish	Aliphatic polyurethane OR Aliphatic epoxy	Aluminum Aluminum or silver-grey	102 (4.0) 203 (8.0)
Zinc (Galvanized Metals)			
Surface Conditioner			51 (2.0)
Field Primer		Grey or off-white	127 (5.0)
Finish	Aliphatic polyurethane OR Aliphatic epoxy	Aluminum Aluminum or silver-grey	102 (4.0) 203 (8.0)
Carbon Steel			
Shop Primer		Grey or red	12.7 (0.50)
Field Primer		Grey or off-white	178 (7.0)
Finish	Aliphatic polyurethane OR Aliphatic epoxy	Aluminum Aluminum or silver-grey	102 (4.0) 203 (8.0)

SECTION 09900 PAINTING

PART 2 - PRODUCTS

2.2 MATERIALS

2.2.1 Paint shall be enamel.

SECTION 13440 INSTRUMENTATION

PART 1 - GENERAL

1.3 QUALITY ASSURANCE

1.3.2 Commercial Grade Item Procurement: See Practice 134.200.1058

1.3.3 Electrical/Electronic Product Acceptability

1.3.3.1.1 Each product shall be listed for intended use in one of the following and shall bear listing organization's label. In absence of label, provide documentation that verifies product listing.

a. FM Approval Guide.
b. UL Electrical Appliance and Utilization Equipment Directory.
c. UL Electrical Construction Materials Directory.

1.3.3.1.2 If product is not listed in above directories or guide, provide product that has been tested and certified by a laboratory that has been nationally recognized in accordance with 29 CFR 1910.7. Provide the following.

a. OSHA documentation that demonstrates recognition.
b. Laboratory documentation that verifies testing in accordance with national code or standard.

1.3.3.3 If product is not listed by UL or FM and if a nationally recognized laboratory is not available, submit descriptive literature to Design Engineer. Literature shall include product specification and description of intended application.

1.3.4 Misrepresented Products: See Practice 134.200.1500 for required measures to prevent use of misrepresented products.

PART 2 - PRODUCTS

2.3 EQUIPMENT

2.3.1 INSTRUMENTS

The following lists the anticipated instrumentation and control elements required based on the Process Flow Diagrams. This list will be used to assess the size of the overall control system for evaluation of alternatives.

PRELIMINARY INSTRUMENT AND CONTROL LIST

TAG	DESCRIPTION	LOCATION
FT	Flow Element integrated with Transmitter for Helium System	Helium Purge
FIQ	Flow totalizer for Helium System	Helium Purge
RT	Radiation Unit for Helium System	Helium Purge
PT	Pressure Transmitter for Helium System	Helium Purge
PI	Pressure Indicator for Helium System	Helium Purge
LDE	Leak detector Element for Wet Cell	Pool Cell
LDK	Leak detector relay for Wet Cell	Piping Gallery
P	Wet Sump Pump	Pool Cell
HS	Handswitch for Wet Sump Pump	Piping Gallery
II	Current Indicator for Wet Sump Pump	Piping Gallery
YL	Light indicator for Wet Sump Pump	Piping Gallery
RT	Radiation Unit for Ion-exchange	Pool Cell
PI	Pressure Indicator for Ion-exchange	Pool Cell
RT	Radiation Unit for Recirculation Pump	Pool Cell
PT	Pressure Transmitter for Recirculation	Pool Cell
PI	Pressure Indicator for Recirculation	Piping Gallery
FT	Flow Transmitter for Recirculation	Pool Cell
FI	Flow Indicator for Recirculation	Operating Gallery
P	Recirculation Pump	Pool Cell
HS	Handswitch for recirculation pump	Piping Gallery
II	Current Indicator for recirculation pump	Piping Gallery
YL	Light indicator for recirculation pump	Piping Gallery
HS	Handswitch for recirculation pump	Operating Gallery
II	Current Indicator for recirculation pump	Operating Gallery
YL	Light indicator for recirculation pump	Operating Gallery
LE	Level Element for Pool Cell	Pool Cell
LT	Level Transmitter for Pool Cell	Piping Gallery
LI	Level Indicator for Pool Cell	Operating Gallery
TE	Temperature for Pool Cell	Pool Cell
TC	Temperature Controller for Pool Cell	Piping Gallery
TI	Temperature Indicator for Pool Cell	Operating Gallery
TE	Temperature for Pool Cell	Pool Cell
TC	Temperature Controller for Pool Cell	Piping Gallery
TE	Temperature from heat exchanger	Pool Cell
TC	Temperature controller for heat exchange	Piping Gallery
FT	Flow Transmitter for heat exchange	Pool Cell
FI	Flow indicator for heat exchange	Piping Gallery
P	Primary Pool Water Pump	Pool Cell
HS	Handswitch for Pool Water Pump	Piping Gallery
II	Current Indicator for Pool Water Pump	Piping Gallery
YL	Light indicator for Pool Water Pump	Piping Gallery

SECTION 14600 HOISTS AND CRANES

PART 2 - PRODUCTS

2.2 EQUIPMENT

2.2.1.1 Hook: The hook used to lift sludge bearing containers in the T-Plant tunnel, canyon, and cells, shall be a Precision Cutting Technologies fabricated hook and bail per drawing ES-SHS-M5.

2.2.1.2 Load Cell: The load cell, used integrally and in conjunction with the hook, shall be a Mass Load Technologies, 10,000 pound capacity load cell with wireless technology, part No. ML 1800 (includes ML895 remote digital readout and transceiver attached to load cell). Includes modification per buyer's drawing.

2.3 MATERIAL

2.3.1 Hook and Bail: size per drawing ES-SHS-M5, ASTM A-588, grade 50 (corrosion resistant, high strength, low allow steel).

2.3.2 Load Cell: American Iron and Steel Institute (AISI) 4340 annealed alloy steel.

SECTION 15300 FIRE PROTECTION

PART 2 - PRODUCTS

2.2 MATERIALS

2.2.1 Piping

2.2.1.1 Pipe and fittings: In accordance with NFPA 13 for sprinkler system and NFPA 14 for dry stand pipe Schedule 40 steel, threaded or grooved type (rubber gasketed).

a. Welded fittings, approved or listed for shop welding only, may be used in shop-assembled piping sections.
b. Rubber gasketed fittings for use with plain-end pipe shall not be used.

2.2.1.2 Flexible and rigid couplings: Bolted sleeve type for use with grooved-end pipe, with rubber rings for sealing.

2.2.2 Reducers: 1-piece concentric threaded reducers or reducing tees for straight run reduction in pipe sizes. Grooved type, rubber gasketed reducing couplings, and hexagonal or face bushings shall not be used without approval

2.2.3 Identification Labels: Approximately 60 by 350 mm (2-1/4 by 14 inches), bearing words FIRE PROTECTION WATER, and a direction arrow. Labels shall have white characters on red background and adhesive backing.

2.2.4 Expansion Anchors:

2.2.4.1 For concrete: FS FF-S-325, wedge type; Hilti Fastening Systems "Kwik-Bolt II," ITW-Ramset "Trubolt Wedge Anchor," or approved substitute. Plug type anchors, set by driving anchor bodies into holes and over plugs, shall not be used.

2.2.4.2 For filled concrete blocks: FS FF-S-325, sleeve type; Hilti Fastening Systems "Hol-Hugger," ITW-Ramset "Dynabolt Sleeve Anchor," or approved substitute. If open cells are contacted, use toggle bolts.

2.2.5 Penetration Sealants:

2.2.6 Penetration Packing

2.2.6.1 Nonfirestopping: Fiberglass or mineral wool.

2.2.6.2 Firestopping devices: Listed in UL Fire Resistance Directory or FM Approval Guide for intended application.

2.2.7 Paint:

2.3 EQUIPMENT

2.3.1 Water Motor Alarm Gong: Weatherproof mechanical gong with hood, complete with drain and interconnecting piping.

2.3.2 Backflow Prevention Assembly: Flanged reduced-pressure principle type with OS&Y gate type isolation valves. Assembly shall be a model included on current list of State of Washington, Department of Health, and Approved Backflow Prevention Assemblies.

2.3.3 Switches

2.3.3.1 Water-flow alarm pressure switch for installation on sprinkler system retard chamber: Pressure operated having built-in adjustable-time retard feature that may be set from 0 seconds to 1 minute or more. Retard feature shall recycle instantly and automatically, and have no build-up.

2.3.4 Automatic Sprinklers: Nominal 15 mm (1/2-inch) diameter orifices, rated for ordinary- temperature classification, unless other temperature ratings are required by NFPA 13 Extended coverage heads shall not be used.

2.3.5 Sprinkler Head Guards: Formed wire or forged steel, suitable for use with upright or pendent sprinklers that can be attached or removed without disturbing sprinkler head.

2.3.6 Sprinkler Cabinet: Provide with required number of sprinkler heads of ratings and types installed, sprinkler wrench, and locate adjacent to riser.

2.3.7 Fire Department Connection: Brass or Brass finished body, with self-closing [single] [or] [double] clapper, threaded plugs and chains, automatic balldrip valve, and escutcheon plate. Connection shall be 100 mm (4-inch) NPT by 65 mm (2-1/2-inch) hose thread by 65 mm (2-1/2-inch) hose thread. Hose threads shall be 3 threads/cm (7-1/2 threads/inch), in accordance with NFPA 1963 and used on sprinkler system and dry stand pipe system.

2.3.8 Check Valves: Iron body where shown on the Drawings.

2.3.9 System Risers

2.3.9.1 Valve assemblies: 150 mm (6-inch) alarm-check assembly with standard trim, retard chamber, system main-drain valve assembly, and water motor-alarm gong.

2.3.9.2 Gate valves: OS&Y, iron body where shown on the Drawings.

2.3.10 Dry Hose System

2.3.10.1 100 mm (4-inch)galvanized pipe, inside and out.

2.3.10.2 Flexible and rigid couplings: bolted Sleeve Type for use with grooved-end pipe, with rubber rings for sealing.

<u>SECTION 15493</u> CHEMICAL PROCESS PIPING SYSTEMS

PART 2- PRODUCTS

2.1.1 MATERIALS

2.1.1.1 Pipe: Pipe code M-9, majority 1 inch/other sizes per drawings, ASTM A-312 type 304L stainless steel.

2.1.1.2 Valves: Flanged ball valves for on/off service, 316 stainless steel.

2.1.1.3 Pipe supports: Stainless steel shapes, ASTM A 276, Type 304 or 304L, as required.

2.2.2 EQUIPMENT

2.2.2.1 Cooling System Pump: The pump used in the heat exchange system, located in the container storage pool cell, shall be a Gorman-Rupp, self-priming centrifugal, stainless steel, belt driven, 1 1/2" x 1 1/2", 10GPM@25' TDH, with 3600RPM, 1HP, 3-phase 208-230/460V TEFC motor, Part No. 81-1/2E9-B

2.2.2.2 Ion-exchange System Pump: The pump used in the ion-exchange system, located in the container storage pool, shall be a Gorman-Rupp, self-priming centrifugal, cast iron, belt driven, 1" x 1", 10GPM@100' TDH, with 3600RPM, 2HP, 3-phase 208-230/460V TEFC motor. Part No. 31A3-B. Note: low flow/ high head self-priming stainless steel centrifugal pumps are not readily available; cast iron is a viable 2nd choice material.

2.2.2.3 The pump used in the pool water cooling system (located in the container storage pool), which takes its feed from the cooling system tank, shall be a Goulds, end-suction centrifugal, stainless steel, close-coupled, 1" x 1 ½", 15GPM@25' TDH, with 1800RPM, 1HP, 3-phase, 208-230/460V motor. Part No. 3100.

2.2.2.4 Sump Pumps: The sump pump used in both the wet and dry cell sumps shall be a Gorman-Rupp, submersible, stainless steel wetted parts, 1 ½", 10GPM@20' TDH, with 3400RPM, 1/3HP, 1-phase, 115V, 60Hz, TEFC motor. Part No. S1 1/2C3.

2.2.2.5 Chiller: The chiller used as part of the pool water cooling system, located in the pipe gallery, shall be a Technical Systems, air cooled water chiller, copper tubes, aluminum fins, carbon case, 7gpm throughput, 60 F in and 45 F out, minimum 52,000 BTU/HR (4.33 ton) capacity, with 5 HP compressor and ½ HP condenser fan. Series 30, part No. 30AOLS5. Note: the chiller will be located in the pipe gallery, and will not utilize or contact the demineralized and potentially contaminated pool water. Therefore, a specially fabricated stainless chiller will not be used.

2.2.2.6 Heat Exchanger: The heat exchanger used as part of the pool water cooling system, located in the container storage pool, shall be an ITT Standard, shell and tube, stainless steel, 1 pass shell/4 pass tube, 7gpm throughput, 75 F in and 60 F out shell side and 45 F in and 60 F out tube side, minimum 52,000 BTU/HR (4.33 ton) capacity. Series SSCF, model No. 03036.

2.2.3 Special Protective Coating: See Section 09805.

2.2.4 Painting: See Section 09900.

2.2.5 Penetration Sealants: See Section 07900

2.2.6 Pipe Supports: Standard, manufactured components as shown on the Drawings. Pipe supports and attachments welded to pressure-containment boundaries may be

noncertified material, provided material bears a type identifying mark, is suitable for welding, and compatible with material to which it is attached.

2.2.7 Expansion Anchors: See Section 05055.

PIPE CODE M-9			
Service	Max Operating Pressure kPa (lb*f*/in^2) gage	Test Pressure kPa (lb*f*/in^2) gage	Max Operating Temp °C (°F)
Examples Demineralized Water (DMW)	690 (100)		65 (150)
Sizes	DN40 through DN250 (1-1/2 through 10 inch)	DN300 (12 inch) and larger	
Pipe	ASTM A 312M (ASTM A 312), Grade TP 304L, seamless.	ASTM A 312M (ASTM A 312), Grade TP 304L, welded.	
Wall Thickness	Schedule 40S	Standard weight	
Fittings	ASTM A 403M (ASTM A 403), Class WP 304L, buttwelding in accordance with ASME B16.9, wall thickness to match pipe.		
Flanges	ASTM A 182M (ASTM A 182), Grade F 304L, Class 150, forged, raised face, weld neck in accordance with ASME B16.5. Bore to match pipe ID. Use flat face where mating to flat-face flanges.		
Bolting	ASTM A 193M (ASTM A 193), Grade B8, alloy-steel studs, and ASTM A 194M (ASTM A 194), Grade 8F, heavy hex nuts.		
Gaskets	Spiral-wound, nonasbestos, 4.45 mm (0.175 inch) thick, with 6 mm (1/8-inch) thick carbon steel gage ring; Garlock Guardian Type CR, or Flexitallic Style CG with flexite super filler. Use full-face gaskets with flat-face flanges; Garlock "Blue-Gard" Style 3000, or Anchor Packing "Clean Leaf" No. 443.		
Valves	ASTM A 351M (ASTM A 351), Grade CF8M, Class 150, raised-face flanged ends, teflon gaskets and seals.		
Gate	OS&Y bolted bonnet, solid-wedge disc, rising stem, integral seat.		
Globe	OS&Y bolted bonnet, plug type disc, rising stem, integral seat.		
Check	Bolted cover, swing, integral seat.		

SECTION 16721 FIRE ALARM AND FIRE DETECTION SYSTEMS

PART 2 - PRODUCTS

2.2 MATERIALS

2.2.1 Conduit, Fittings, and Boxes

2.2.1.1 Conduit: ANSI C80.1, FS WW-C-566, UL 797, and 1242.

2.2.1.2 PVC coating on rigid steel conduit: NEMA RN 1, Type A-40, factory applied.

2.2.1.3 Flexible-metal conduit shall have an integral ground conductor.

2.2.1.4 Fittings for rigid steel and EMT conduit: NEMA FB 1. Use compression type, threadless fittings with EMT.

2.2.1.5 Fittings for flexible-metal conduit: FS W-F-406, squeeze type.

2.2.1.6 Provide watertight fittings for conduit entries into sides or tops of NEMA ICS 6, Type 3 or 3R enclosures.

2.2.1.7 Couplings: Erickson type.

2.2.1.8 Exterior RFAR-locator lighting-fixture outlet boxes: Cast with threaded hubs.

2.2.2 Conductors: Stranded copper, Type THWN/THHN, except Type TW may be used for lighting circuits and ground wires.

2.2.3 Connectors: Solderless, pressure type, rated for use with copper conductors. Use in installations not exceeding 600 V between conductors. Connectors with insulating caps or covers shall be rated for system utilization voltage. Use Ideal Industries, Incorporated "Wire-Nuts," Thomas and Betts Company "Sta-Kon," or 3M Company "Scotchlok."

2.2.4 Wire Pulling Compound: Not permitted.

2.2.5 Penetration Sealants:

2.2.6 Supports

2.2.6.1 Individual conduit hangers: Factory-made springable wrought-steel clamps, or malleable-iron split and hinged rings. For suspended conduit, clamps or rings shall bolt to, or interlock with, threaded suspension rod.

2.2.6.2 Conduit supports: 1-hole clamps with clampbacks.

2.2.6.3 Expansion anchors

a. For concrete wedge type anchors: See Section 05055.
b. For filled concrete blocks: Sleeve type anchors; Hilti Fastening Systems "Hol-Hugger" or ITW-Ramjet "Dynabolt Sleeve Anchor." If open cells are contacted, use toggle bolts.

2.3 EQUIPMENT

2.3.1 Provide fire alarm equipment in accordance with NEMA ICS 6, Type 3 or 3R.

2.3.2 Fire Alarm Control Panel (FACP): Provide Siemens – Cerberus Division (Pyrotronics), Model MXL designed for surface mounting. Panel door shall have a cylinder lock with a key matched to Corbin Catalog 60, or keys as specified by Hanford Fire Department.

2.3.3 Manual Fire Alarm Stations: Double action, nonbreak glass type.

2.3.4 Battery Backup Power Supply

2.3.4.1 Provide a battery backup power supply for FACP, with automatic transfer upon loss of facility power, and automatic restoration upon return of facility power. Use rechargeable batteries of heavy-duty, sealed lead acid-gelled-electrolyte type, designed for fire alarm use in accordance with NFPA 72.

2.3.4.2 Size battery assembly to operate system for 60 hours minimum, and then sound bells for 5 minutes minimum. Determine required battery output with calculations similar to those shown in Appendix A.

2.3.4.3 Fire Alarm Bell: Single-stroke 6-inch diameter bell with a universal mounting plate. Bell shall operate on 24 V dc. Bell must sound the same as currently used at T Plant.

2.3.7 Detectors: Provide detectors FACP manufacturer has approved for use with FACP.

2.3.7.1 Ionization smoke detector: Siemens Cerberus Division (Pyrotronics) Model _____FP-11_____.

2.3.7.2 Thermal Fire detector: Siemens Cerberus Division (Pyrotronics) Model _____DT-135R_____.

2.3.7.3 Air duct smoke detector: (Pyrotronics) Model _____TBD_____.

SECTION 16400 LOW VOLTAGE DISTRIBUTION

PART 2 - PRODUCTS

2.2 MATERIALS

2.2.1 Box, outlet: UL 514A or NEMA OS 1 and the following.

2.2.1.3 For interior receptacle: Pressed steel.

2.2.2 Conductor: UL 83, copper with type THWN/THHN or XHHW insulation, of type and AWG size specified on the Drawings. Sizes No. 8 AWG and larger shall be stranded.

2.2.3 Conduit and Tubing

2.2.3.1 Rigid metal conduit: UL 6 or ANSI C80.1.

2.2.3.5 Electrical, zinc-coated steel metallic tubing (EMT): UL 797 or ANSI C80.3.

2.2.3.7 Flexible conduit:

a. General-purpose type: UL 1.
b. Liquid-tight steel: UL 360.
c. Liquid-tight nonmetallic: UL 1660.

2.2.4 Connector, Wire: UL 486A or UL 486C and the following.

2.2.4.1 Terminal lugs: Crimp type with ring or spade lug with turned up tips, nylon or vinyl insulated.

2.2.4.2 Twist-on wire joints: Nylon insulated with tapered spring grip.

2.2.5 Fittings, Conduit

2.2.5.1 For rigid steel and EMT conduit: UL 514B or NEMA FB 1. Use compression type, threadless fittings with EMT.

2.2.5.2 For flexible metal conduit: UL 514B.

2.2.5.4 For entries into sides and tops of UL 50 or NEMA ICS 6, Type 3 or 3R enclosures: Myers type watertight fittings or sealing type locknuts.

2.2.5.5 Three-piece Couplings: Erickson type.

2.2.6 Identification Materials and Plates

2.2.6.1 Conduit: [Brady marking film.] [Black paint and stencils.]

2.2.6.2 Wiremarkers: Imprinted tubular plastic.

2.2.6.3 Equipment nameplates: Laminated plastic, 2 mm (1/16 inch) thick with white surface and black core, sized to meet legend requirements. Edges beveled and smooth. Engraved nomenclature sharp and clear. Engraved manufacturer's standard nameplates may be used if equal in quality and legibility.

2.2.7 Insulating Putty: 3M Company "Scotchfil," General Electric Company No. 8389, or Kearney Company "Airseal."

2.2.8 Lubricant and Sealant for Conduit Thread: Conductive compound providing anti-seize and corrosion protection. Thomas & Betts "KOPR-SHIELD" or approved substitute.

2.2.10 Penetration Sealant: See Section 07900.

2.2.10.3 Firestopping devices: Listed in UL Fire Resistance Directory or FM Approval Guide for intended application.

2.2.11 Sealing Compound for Conduit: Porcelain Products Company "Sealex" or Gardner-Bender "Duct Seal."

2.2.12 Supports

2.2.12.1 Individual conduit hangers: Factory-made, springable, wrought steel clamps, or malleable iron split and hinged rings. For suspended conduit, clamps or rings shall bolt to, or interlock with, threaded suspension rod.

2.2.12.2 Conduit supports: 1-hole clamps with clampbacks, or Unistrut with clamps.

2.2.12.4 Expansion anchors: See Section 05055.

2.3 EQUIPMENT

2.3.1 Controller, Motor

2.3.1.1 Combination: UL 508 or NEMA ICS 2-321, horsepower rated with 2 NO and 2 NC auxiliary contacts. Bimetallic or melting alloy type overload elements are acceptable. Overload relay reset in cover. UL 489 or NEMA AB 1 thermal magnetic trip or instantaneous motor circuit protector type circuit breakers. Full voltage, non-reversing, 120V local and remote control.

2.3.1.2 Manual: UL 508 or NEMA ICS 2-321, toggle operated, provided with means for locking in "Off" position, and nameplate engraved as shown on the Drawings.

2.3.2 Fuse, Motor Load: UL 198E or NEMA FU 1.

2.3.3 Grounding and Bonding Equipment: UL 467.

2.3.5 Motor: Provide with the following minimum nameplate efficiencies.

kW (Horsepower)	Minimum Efficiencies		
	1200 r/min	1800 r/min	3600 r/min
7.5 (10)	90.2	91.0	90.2
11.2 (15)	91.0	92.0	91.0
14.9 (20)	91.7	93.0	91.7
18.6 (25)	92.4	93.5	92.0
22.4 (30)	93.0	93.6	92.4
29.8 (40)	93.6	94.1	93.0
37.3 (50)	93.6	94.1	93.0
44.8 (60)	93.9	94.5	93.6
56.0 (75)	94.5	95.0	94.1
74.6 (100)	94.5	95.0	94.5
93.2 (125)	94.5	95.4	94.5
111.9 (150)	95.0	95.4	94.5
149.2 (200)	95.0	95.4	95.0
149.2+ (200+)	95.0	95.4	95.0

2.3.8 Plates

2.3.8.1 For receptacle: Pressed steel.

2.3.9 Receptacle: UL 498 or NEMA WD 1 Designation 5-15R, duplex, [ivory] [brown], specification grade, rated 15 A, 120 V, 3-wire, grounding type, with screw terminals arranged for side wiring. Self-grounding receptacles may be used instead of ground requirements specified.

2.3.10 Switches

2.3.10.1 Safety: NEMA KS 1, [fusible] [nonfusible] heavy duty, Type HD, horsepower rated for [250 V ac or dc] [600 V ac] as shown on the Drawings. Fuses shall be NEMA FU 1 cartridge type, [single element, Class J, L, or M] [dual element, UL Class RK5].

2.3.12 Terminal Blocks: UL 1059, UL file number, or NEMA ICS 4.

2.3.12.1 For No. 10 AWG conductors and smaller: Either 1-piece or factory-assembled, sectional, double terminal, barrier-type, with binder-screw terminals. Terminal ampacities shall be equal to or greater than conductor ampacities.

2.3.12.2 For No. 8 AWG conductors and larger: Either 1-piece or factory-assembled, sectional, barrier-type with box-lug terminals having pressure plate between screw and conductor. Size terminals for conductors to be connected.

2.3.12.3 Provide covers for live parts of terminations on circuits of 150 V or more to ground. Provide with means for ready inspection and full-width marking areas.

2.3.13 3 Mini Power Centers: NEMA ST 20, wall mounted, 60 Hz, 5 kVA, single phase, 480-120/240V, Primary and secondary main breaker, try-type transformer, and secondary distribution loadcenter, factory assembled, in single common NEMA 3R enclosure. Twelve, single pole secondary branch circuit breakers, molded case, UL 489 or NEMA AB 1.

APPENDIX E

PLANT FORCES WORK REVIEW

(Provided by Fluor Hanford)

FDH	Fluor Daniel Hanford, Inc. P.O. Box 1000, Richland, WA **PLANT FORCES WORK REVIEW**	Plant Forces Work Review No. FHI-175-00	Rev. 0	Date 11/14/00	Page 1 of 3

REQUESTER

Title	Work Pkg or Project No.	Area	Bldg. No.
MODIFICATIONS TO T-PLANT TO ACCEPT K-BASIN SLUDGE	SNF A-13(b)	200 W	221-T

Estimated Cost of Work

*1.	Procured Material/Equipment	$	60,000.00
*2.	Materials/Equipment Purchased for Shop Fabrication	$	4,414,000.00
*3.	Job-Site Material	$	751,500.00
4.	Shop Labor	$	3,367,000.00
5.	Job-Site Labor	$	14,028,400.00
6.	Other Costs (design, field inspection, and contingency allowance)	$	7,963,400.00
7.	General Overhead (Labor Only)	$	3,479,080.00
	Total Job		34,063,380.00

*Include estimated fair value of material or equipment acquired on site

Requester's Name: Eric G. Erpenbeck Phone: 376-8032 Date: 10/19/00

FDH

Reviewed By:

Area Work Review Agent: Rick Ransdell Date: 11/09/00

Company Work Review Agent: *Gary Maxwell* Date: *11/17/00*

DOE

The following determination has been made regarding the applicability of the Davis-Bacon Act, as amended, to the work described above:

Applicable	Not Applicable			
[X]	[ ]	Chairman RL-Labor Standards Board	*Original signed by Acting Paul R. Davis*	Date *11/20/00*

"Description of Work"

Briefly state the reason for this work activity:

To support the K-Basin sludge storage mission at T-Plant and to comply with regulatory requirements, T-Plant will modify four process cells and one pool cell. T-Plant canyon building and 271-T (office space) require new fire systems to be installed to comply with deficiencies identified in 1995. Existing helium system will be modified for purging shipping cask upon arrival at the T-Plant rail tunnel. The purge system will remove any potential hydrogen generated during transport from K-Basins to T-Plant and will include a radiation monitor to verify the absence of a leak during transport. In order to make Cell 2R (existing pool cell) comply with seismic requirements, all cracks in the existing pool walls must be located and repaired using epoxy injection or by installing tendons/anchors at the deck level. Modifications to the existing process cells will include a new rack /liner system to support the containers during placement and storage and cell liners and leak detection to protect the environment in accordance with TSCA requirements.

Job summary:

Repair cracks in cells and pool, install new fire systems, modify helium system, and build new stainless steel cell/pool liners.

Discuss all programmatic or physically associated work planned, underway, or recently completed in the work area:

Four T-Plant process cells needed for the storage of Type 1-sludge the 221-T canyon deck must be cleaned to allow access to the process cells. In addition, T-Plant operations will remove all equipment except cell transfer line flanges from each of the four process cells. This work must happen before the modifications for the process cells can be done.

Upgrades to T Plant (except Cell 2R) will run in parallel with the shipments of Shippingport fuel to the Canister Storage Building.

A-6400-018 (3/99)

	Plant Forces Work Review No.	Rev.	Date	Page
	FHI-175-00	0	11/14/00	2 of 3

Describe entire work scope. Fully describe complete job scope using a stepped work flow format. Describe and estimate the cost of labor and material on foundations, structures, utility systems, or other construction type activity. Provide sketches or measurements for all work:

Modifications to T-Plant to support the sludge storage mission include the following key upgrades:

(1) Install a new cover over the pool cell (Cell 2R).
(2) Install new secondary containment, container storage racks (for TYPE 1 Containers), leak detectors, and sump pumps in four existing process cells.
(3) Install self-leveling concrete on four process cell floors.
(4) Install a new pool liner for Cell 2R, underwater storage racks (for TYPE 2 Containers), and new water conditioning, sampling capability and monitoring systems.
(5) Install new crane hooks for lifting TYPE 1 and TYPE 2 containers. The new hooks must be compatible with existing 10-ton crane at T Plant.
(6) Install a new automatic sprinkler system throughout 271-T.
(7) Install a fire alarm and notification system in the 221-T Canyon.
(8) Install a new dry standpipe system in the 221-T canyon.
(9) Ensure canyon door locks meet S&S requirements.
(10) Install new radioactive contamination detector on exhaust port of the existing shipping cask and connect to the existing helium purge system previously installed by Shippingport fuel removal project.
(11) Install a new Alpha CAM on the 291-T stack.
(12) Conduct Crack location and Crack repair within the Cell 2R (PWR pool).
(13) Offsite Design/Build130-200 Type 1 and 2 Storage Containers and Water Addition System for Type 2 Containers.

BASIS OF ESTIMATE:

ITEM 1: Design/Build and Install New Cover Block Over Cell 2R

Two new cover blocks will be required. The new reinforced (#4 and #10 rebar cross meshed on 8" centers) cover blocks will each be 2'thk x 17'lg x 7'-6"w. In addition to the two new cover blocks will be 12" thick metal grating 14 feet by 15 feet, done in sections.

ITEM 2: Secondary Containment, water addition system, leak detectors, sump pumps in four process cells.

Each process cell is 13' x 17' x 28' deep. The Type 1 sludge containers are approximately 13' tall and 24" in diameter. The rack support structure is expected to be 200" x 144" x 120 "h in a hex array for Type 1 Container and a 330" x 156" square array for the Type 2 container.

The racks will be assumed to be constructed of stainless steel. The racks will have a base plate that is an integral part of the rack structure. This base plate will act as the secondary containment for each rack secondary containment structure.

Shop Fabrication
Each Cell will have a 13' x 17' x 4' height Stainless Steel Liner.
Each Cell will have a 16' x 12' x 10' high Carbon Steel rack.
Each Cell will have one pump and a leak detector.

ITEM 3: Install four 13' x 17' x 1'thk self leveling concrete on four process cell floors.

ITEM 4: Install two new 13' x 27' x 17'h pool liner for Cell 2R, underwater storage racks (TYPE 2 Containers), and a new water conditioning (cooler), sampling capability and monitoring systems

Install instrumentation, controls, and Chiller system including testing.

ITEM 5: Purchase new crane hooks for lifting TYPE 1 and TYPE 2 container designs compatible with existing 10 ton crane at T-Plant. Also, a four ton extension Grappler and a 10 Ton Hook

ITEM 6: Install a new automatic sprinkler system, racks, and sprinkler heads throughout 271-T, dispose of asbestos.

	Plant Forces Work Review No.	Rev.	Date	Page
	FHI-175-00	0	11/14/00	3 of 3

ITEM 7: Install a new fire alarm, notification system in the 221-T Canyon, electrical connectors/RFAR box, FACP, Heat/Smoke Detectors, and Pull Stations within the 800' long canyon.

ITEM 8: Install a new dry standpipe system in the 221-T canyon. Core-drill one hole through concrete structure. Including new pipe, pipe supports, fittings within the 800' long canyon.

ITEM 9: **Ensure canyon Door Locks Meet S&S Requirements. Install ten** new door locks.

ITEM 10: Install new valves, connecting piping for radioactive contamination detector on exhaust port of the existing shipping cask and connect to the existing helium purge system previously installed by Shippingport fuel removal project

ITEM 11: Install a new Alpha CAM on the 291-T stack.

ITEM 12: Conduct crack detection and repair with epoxy within Cell 2R (PWR pool)

ITEM 13: *Offsite Design/Build 130-200 Type 1 and 2 Storage Containers and Water Addition System for Type 1 Containers.*

APPENDIX F

PERMITTING STRATEGY

(Provided by Fluor Hanford)

Waste Designation Position Paper.....F-4

PERMITTING STRATEGY FOR THE SLUDGE HANDLING PROJECT (SNF PROJECT A-13(b)

The Spent Nuclear Fuel Project will remove spent fuel and residual sludge material from the 105-KE and 105-KW Basins over the next several years. An estimated 50 to 70 cubic meters of sludge are anticipated from the floor and pits of the basins, from the fuel canisters, and from washing of fuel. Upon removal from KE and KW Basins, the sludge will be classified as a remote-handled transuranic (RH-TRU) waste (Loscoe 1999). The sludge waste streams will be packaged and transferred to T Plant in 200-West Area for storage until the waste can be prepared for shipment to the Waste Isolation Pilot Plant or other approved location.

Environmental compliance activities associated with the receipt and storage of K–Basin sludge are governed by the following:

- *National Environmental Policy Act of 1969* (NEPA)
- *Resource Conservation and Recovery Act of 1976* (RCRA)
- *Toxic Substances Control Act* (TSCA)
- *Comprehensive Environmental Response, Compensation, and Liability Act of 1980* (CERCLA) as amended by the *Superfund Amendments and Reauthorization Act of 1986* (SARA)
- Air Permitting (WAC 246-247, 40 CFR 61, Subpart H, etc.)

The proposed approach and the actions required to obtain appropriate regulatory approvals for compliant storage of sludge are discussed in the following sections.

1.0 NATIONAL ENVIRONMENTAL POLICY ACT

NEPA documentation must be completed and approved before detailed design of facility modifications for the receipt and storage of the sludge at T Plant may occur. The State Environmental Policy Act (SEPA) imposes requirements analogous to NEPA on state and local agencies. Both NEPA and SEPA regulations establish the intent to avoid unnecessary duplication of effort, excessive paperwork, and time delays. SEPA documentation may be integrated with NEPA documentation, or satisfied by NEPA documentation in accordance with WAC 197-11-600 through 640.

When DOE applies to an agency of the state of Washington for a permit, license, etc., DOE as the applicant must provide information to allow the state agency to consider the significance of environmental consequences of the action. This is normally done through submission of a SEPA checklist or an approved NEPA Environmental Assessment (EA) or Environmental Impact Statement (EIS).

An EA (DOE 2001) was prepared to assess potential environmental impacts associated with the proposed action to store sludge from the 100 Area K Basins in the 221-T Canyon until future disposition of the sludge is determined. DOE will use information contained in the EA to determine if the proposed action is a major federal action significantly affecting the quality of the

human environment. If the proposed action is determined not to be major and significant, a Finding of No Significant Impact (FONSI) will be issued.

The current schedule calls for public review and comment on the EA during the second quarter of FY 2001. A decision on the FONSI is expected shortly thereafter.

2.0 RESOURCE CONSERVATION AND RECOVERY ACT

The K Basins sludge waste streams will contain both a solid waste component and a radioactive component subject to regulation under the Atomic Energy Act. The radioactive component of the sludge waste stream consists largely of uranium, plutonium, americium, and fission products from the SNF stored in the basins. With respect to designation under the Resource Conservation and Recovery Act Hazardous Waste Regulations (40 CFR 260 through 268) and the Washington State Dangerous Waste Regulations (WAC 173-303), only the solid waste component of the sludge is subject to regulation. The radioactive component of the waste is excluded from regulation as source material in accordance with 40 CFR 261.4(a)(4). Under the DOE classification system for radioactive waste, the K Basins sludge has been designated remote-handled transuranic waste upon removal from the basins (Loscoe, 1999).

Test data from samples of KE and KW sludge waste streams, combined with knowledge of the waste generating process and the composition and properties of the sludge, show that the sludge waste streams will not designate as a dangerous waste under WAC 173-303. A waste designation position paper, which provides the rationale supporting this conclusion, is being prepared for submittal to the Washington State Department of Ecology in January 2001.

3.0 TOXIC SUBSTANCES CONTROL ACT

Polychlorinated biphenyl (PCB) have been identified in samples of KE floor and pit sludge in concentrations that exceed 50 ppm, but less than 500 ppm. PCBs have been detected in canister sludge from KE and KW in concentrations well below 50 ppm. The source of these PCBs is not known. Due to the as-found PCB concentration in the floor and pit sludge, the storage of K Basins sludge streams at T Plant will be regulated as PCB remediation waste under the Toxic Substance Control Act PCB regulations of 40 CFR 761.65.

4.0 COMPREHENSIVE ENVIRONMENTAL RECOVERY, COMPENSATION, AND LIABILITY ACT

The K Basins are currently considered a remedial action site and, as such, are regulated under CERCLA. A CERCLA Record of Decision (ROD), indicating that K Basins sludge will be transferred to a waste management facility in the 200 Areas, was issued in September 1999 (DOE 1999).

5.0 AIR PERMITTING

The Hanford Site is subject to the emission limits of WAC 173-400-040, *General Standards for Maximum Emissions*, which is designed to protect existing air quality. There are no impacts to

these general standards resulting from the SHS project. New Source Review in accordance with WAC 173-400-110 has been determined inapplicable for nonradioactive emissions, and a notice of construction (NOC) application under WAC 173-400 or WAC 173-460, *Controls for New Sources of Toxic Air Pollutants*, will not be required. An NOC application for radioactive air emissions will be submitted pursuant to WAC 246-247-060.

Air emissions from the sludge containers during storage will leave the T Plant Canyon through the 291-T-1 Stack. Under the proposed action, the 291-T-1 Stack at the T Plant Complex will become a 'major' stack, which requires T Plant Complex operations to meet the continuous monitoring requirements of 40 Code of Federal Regulations (CFR) 61.93, *National Emissions Standards for Hazardous Air Pollutants*. At the December 5, 2000 Routine Technical Assistance Meeting (RTAM) with the WDOH and in conjunction with EPA, WDOH agreed that annual nondestructive assay of T Plant HEPA filters along with resumption of continuous sampling using the existing stack sampling system in its current configuration is an allowable alternate monitoring method, pursuant to WAC 246-247-075(4). A detailed description of this alternative method will be described in the radioactive air emissions NOC application, which must be approved by both WDOH and EPA before construction of the T Plant modifications in support of sludge storage can occur.

6.0 REFERENCES

DOE 1999, *Record of Decision for the USDOE Hanford 100-KR-2 Operable Unit K Basins Interim Remedial Action*, September 1999, U.S. Department of Energy, Richland Operations Office, Richland, Washington.

DOE 2001, *Environmental Assessment for K Basins Sludge Storage at 221-T Building, Hanford Site, Richland, Washington*, DOE/EA-1369, U.S. Department of Energy, Richland Operations Office, Richland, Washington.

Loscoe, P.G. 1999. (external letter to R. D. Hanson of Fluor Daniel Hanford, Inc., *K Basins Sludge Classification* December 2, 1999), 00-SFO-043, U. S. Department of Energy Richland Operations Office, Richland, Washington.

Designation of K Basins Sludge Waste Streams

January 2001

Background

PURPOSE

The Spent Nuclear Fuel Project will remove spent fuel and residual sludge material from the 105-KE and 105-KW Basins over the next several years. An estimated fifty cubic meters of sludge is anticipated from the floor and pits of the basins, from the fuel canisters, and from washing of fuel. Upon removal from the KE and KW Basins, the sludge will classify as a remote-handled transuranic waste (Loscoe, 1999). The sludge waste streams will be packaged and transferred to the T Plant complex in the 200-W area for interim storage until the waste can be prepared for shipment to the Waste Isolation Pilot Plant or other approved location.

This document presents the Hanford Site waste designation for the sludge waste streams in accordance with WAC 173-303-070. Process knowledge and test data from sampling and analysis of sludge and spent nuclear fuel are presented to support the designation.

DESCRIPTION OF WASTE STREAMS AND GENERATING PROCESS

The KE and KW Basins were constructed in the 1950s to store spent nuclear fuel from Hanford reactors. Fuel storage has been the sole function of the basins from initial operations to the present. The basin water has been conditioned by pH adjustment, temperature control, filtration of particulate material and removal of radionuclides using ion exchange resins.

Spent nuclear fuel in the KE Basin is stored in open top canisters, some of which have screened bottoms. The fuel in these open top canisters has corroded to varying degrees. These fuel corrosion products, along with environmental particulates (e.g. windblown dust, vegetation fragments) and corrosion products from fuel racks and other facility components have combined to create a considerable amount of residual sludge material in the KE Basin. This sludge currently resides on the floor of the basins, in the basin pits, and within the fuel storage canisters.

Fuel in the KW Basin has been stored in closed stainless steel and aluminum canisters, which have released far fewer corrosion products to the basins. The KW Basin has some sludge accumulations on the floor, in pits and within fuel canisters, but the total sludge quantity and the radioactive material present are in much smaller quantities.

During deactivation of the basins, two primary waste streams will be generated:

- *Canister and fuel wash sludge.* When the fuel is removed and cleaned in preparation for dry storage, the residual sludge in the fuel canisters will be removed and the fuel will be washed to remove adhered corrosion products. The material removed from the fuel will be screened and particulate larger than 0.25 inch will be dried and managed as spent fuel. Very small particulate material will disperse in the water and be collected in the water treatment system. The remaining sludge (i.e., particles less than 0.25 inches but sufficiently large and dense to settle) is referred to as canister and fuel wash sludge. This sludge will be highly radioactive and have relatively high concentrations of uranium, uranium oxides, and related fuel corrosion products. As packaged for storage, the canister and fuel wash sludge will contain

30% - 40% water by weight. The nominal volume estimate for canister and fuel wash sludge is 3 cubic meters.

- *Floor and pit sludge*. Floor and pit sludge will consist of the sludge currently residing on the floor and in several pits used to accumulate sludge in the basins, along with any additional sludge released from fuel canisters during fuel retrieval operations. The floor and pit sludge composition includes more environmental particulate and nonradioactive corrosion products (e.g., iron oxides), and contains proportionally less fuel corrosion products. As packaged for storage, the floor and pit sludge will contain 30% - 40% water by weight. The nominal volume estimate for floor and pit sludge is 47 cubic meters.

The canister and fuel wash sludge will be packaged in vented, stainless steel canisters and stored underwater in T Plant's fuel pool. The floor and pit sludge will be packaged in similar vented, stainless steel canisters, but will be stored in empty process cells at T Plant rather than underwater.

SUMMARY OF SAMPLING AND LABORATORY TEST DATA

The sludge streams each contain a significant quantity of radioactive material resulting from corrosion of spent nuclear fuel, including uranium, plutonium and fission products. To maintain personnel exposure to these radioactive materials as low as reasonably achievable (ALARA), the Spent Nuclear Fuel Project has followed the principles set forth in the *Joint EPA/NRC Guidance on Testing Requirements for Mixed Radioactive and Hazardous Waste* (62FR 62079 - 62094). Specifically, knowledge of the sludge properties and the generating process has been used to limit the amount of sampling and laboratory testing, when such knowledge is adequate to designate the waste. Additionally, sampling and laboratory testing have sometimes been performed with smaller samples than would typically be obtained in order to maintain personnel exposure as low as reasonably achievable.

There have been three primary sludge sampling campaigns: floor and pit sludge from KE Basin; KE Basin canister sludge; and KW Basin canister sludge. Additionally, analyses have been performed on corroded and uncorroded spent nuclear fuel. The fuel analyses were performed specifically to support fuel removal and drying operations; however, the data are helpful in evaluating the ignitability and reactivity of the canister and fuel wash sludge.

Table 1 summarizes the types of laboratory test data available for the sludge streams. When relevant for designation, more detailed descriptions of the samples obtained and test results are provided later in this document.

Table 1 - Test Data Related to KE and KW Sludge Waste Streams Designation

Waste Stream	105-KE Basin	105-KW Basin
Floor and pit sludge	Total metals TCLP metals PCBs Volatile organic analytes Semi-volatile organic analytes pH Anions X-ray diffraction X-ray fluorescence Total organic carbon Reactivity screening (RSST)	No data
Canister sludge	Total metals TCLP metals PCBs pH Anions X-ray diffraction Total organic carbon Reactivity screening (RSST)	Total metals PCBs PH Anions X-ray diffraction Total organic carbon
Fuel and fuel pieces	No data	Thermogravimetric analysis Ignition testing

Note that floor and pit sludge has not been sampled from the KW Basin. Because KW Basin fuel is better contained, and other operating conditions have been similar to those in the KE Basin, the KE sludge is believed to be representative of KW sludge. With respect to TCLP testing, Ecology and EPA were involved in development of Data Quality Objectives (Makenas, 2000) and a Sampling and Analysis Plan (Baker, Welsh and Makenas, 2000) and agreed that test data from KE sludge samples could be used, in combination with KW sludge total metals data, to designate KW sludge (Bartz and Gadbois, 2000). This rationale can be reasonably inferred to most other parameters of interest in designation of sludge.

REGULATION UNDER OTHER LAWS

The K Basins sludge waste streams will contain both a solid waste component and a radioactive component subject to regulation under the Atomic Energy Act. The radioactive component of the sludge waste stream consists largely of uranium, plutonium, americium, and fission products from the spent nuclear fuel stored in the basins. With respect to designation under the Resource Conservation and Recovery Act Hazardous Waste Regulations (40 CFR 260 through 268) and the Washington State Dangerous Waste Regulations (WAC 173-303), only the solid waste component of the sludge is subject to regulation. The radioactive component of the waste is excluded from regulation as source material in accordance with 40 CFR 261.4(a)(4). Under the DOE classification system for radioactive waste, the K Basins sludge has been designated remote-handled transuranic waste upon removal from the basins (Loscoe, 1999).

Polychlorinated biphenyls have been identified in samples of KE floor and pit sludge in concentrations that exceed 50 ppm, but less than 500 ppm. PCBs have been detected in canister sludge from KE and KW in concentrations well below 50 ppm. The source of these PCBs is not known. Due to the as-found PCB concentration in the floor and pit sludge, the storage and disposal of K Basins sludge streams will be regulated as PCB remediation waste under the Toxic Substance Control Act PCB regulations of 40 CFR 761.61.

Designation

Based on knowledge of the materials and processes that generated the sludge, along with test data, the sludge waste streams are not regulated under WAC 173-303. The following sections describe in detail the rationale and data leading to this designation.

LISTED WASTE DESIGNATION

The sludge waste streams are not designated as F, K, U or P listed dangerous waste. Listed waste numbers can be only be assigned based on knowledge of certain materials and/or processes, none of which have occurred in the KE and KW Basins. The KE and KW Basins were used solely for fuel storage. The sludge is not a U or P listed discarded chemical product, nor are any of the K listed specific or F listed non-specific dangerous waste sources applicable to this waste stream. Additionally, there have been no known discharges or spills of listed waste to either basin.

CHARACTERISTIC WASTE DESIGNATION

Ignitability (D001)

The two sludge waste streams are not designated as ignitable (D001). The liquid portion of the sludge waste stream is water, and thus does not exhibit a flash point. The sludge contains no strong oxidizers. Regarding the non-liquid portion of the sludge, the sludge contains radioactive corrosion products from spent nuclear fuel, which could include some uranium metal fragments and uranium hydride. Under certain conditions, uranium metal and uranium hydride can ignite. Additionally, some potentially ignitable zirconium from the fuel cladding could be present in the sludge. While the radioactive component of the sludge is not strictly subject to regulation under WAC 173-303, the sludge as a whole has been evaluated against WAC 173-303-090(5)(a)(ii) and determined not to meet the definition of ignitability for non-liquids. This definition reads as follows.

> *It is not a liquid and is capable, under standard temperature and pressure, of causing fire through friction, absorption of moisture or spontaneous chemical changes and, when ignited, burns so vigorously and persistently that it creates a hazard.*

The regulations do not specify quantitative test methods or numerical limits for determining whether a non-liquid would be ignitable. Designation of the sludge streams as non-ignitable is based on knowledge of the sludge composition, observed properties of sludge in the basins, observed properties of sludge and fuel in the laboratory, and laboratory test data. This information is summarized below:

- <u>The concentration of uranium metal, uranium hydride and zirconium in the sludge streams will be low</u>. The fuel corrosion products are largely oxidized uranium, with much smaller amounts of zirconium oxides from the zircaloy fuel cladding. The metal and hydride in

sludge are only transient components of the corrosion products, which are readily oxidized in the basins and under the anticipated storage conditions for the sludge. The uranium metal concentration in the KE floor and pit sludge is estimated to be less than 0.2% (as settled sludge), with no uranium hydride or unoxidized zirconium (Pearce, 2000). Since fuel in the KW Basins is stored in closed canisters, uranium metal, uranium hydride and zirconium have not been released to the KW floor and pit sludge in significant concentrations.

Canister and fuel wash sludge is expected to contain higher concentrations of uranium metal, and possibly some hydride. Test data indicate that canister sludge contains less than 2% uranium metal (Pearce, 2000). Estimate of the uranium hydride concentration in canister sludge is also less than 2%. The amount of zirconium present in canister sludge is very low. At these low concentrations, the sludge will not exhibit the ignitable properties of relatively pure uranium metal or hydride. It should be noted that fuel wash sludge will contain a significant quantity of fuel (uranium and zircaloy) pieces. These will, however, oxidize to a significant extent in the knockout pots prior to being removed from the basins.

- The waste matrix cannot sustain vigorous combustion. The definition of ignitable non-liquids includes the requirement that, when ignited, the waste *burns so vigorously and persistently that it creates a hazard.* The composition of both sludge streams is predominantly water and noncombustible inorganic materials. Even if traces of uranium metal or hydride could ignite, there is insufficient combustible material in the waste to sustain the intensity of combustion described by WAC 173-303-090(5)(a)(ii).

- Samples of sludge and fuel have not ignited during sampling, shipping or handling. Wet sludge samples have been freely handled without special precautions to prevent ignition. A number of these samples have been allowed to dry out, with no evidence of heating or ignition (Baker, Makenas and Pottmeyer, 2000). Small samples of fuel segments (including highly corroded portions of fuel elements, representative of the fuel pieces in fuel wash sludge) have also been handled in the laboratory without special precautions to prevent ignition, and no self-heating or ignition has been observed at standard temperatures. These observations indicate that the sludge streams will not ignite under the conditions required by WAC 173-303-090(5)(a)(ii).

- Test data on sludge and fuel. While the regulations do not specify test methods to determine the ignitability of non-liquids, test methods are available that measure the relative potential for runaway reactions of materials. These methods are useful in predicting the tendency of materials to ignite or react violently. Several such tests have been conducted on sludge and fuel samples, as described below.

  Samples of floor and pit sludge and canister sludge have been tested using the Reactive System Screening Tool (RSST). In this test, samples are slowly heated in a reaction vessel and monitored for rapid temperature increases that are indicative of exothermic reactions. Seven samples of floor and pit sludge and one sample of canister sludge were tested by the RSST. None of the samples showed evidence of reaction through sample dry-out, typically above 200 degrees C (Bechtold, 2000a and Bechtold, 2000b) These data are a strong indication that floor and pit sludge and canister sludge will not ignite under the conditions

(standard temperature and pressure) that the regulations specify.

Data supporting the non-ignitability of fuel wash sludge comes from ignition testing and Thermogravimetric Analysis (TGA) on samples of damaged fuel elements from the KW Basin. While these studies were performed to evaluate the safety of the fuel removal and conditioning processes rather than sludge storage, they provide useful information for designation. In ignition testing, both intact and highly corroded fuel segments were heated in air until they ignited. The corroded fuel segments ignited between 277 and 500 degrees C (Abrefah et al., 1999). These ignition temperatures are far higher than the conditions specified by WAC 173-303-090(5)(a)(ii), i.e. standard temperature. The TGA test involves heating small samples of fuel in a controlled atmosphere (moist air, dry air and moist helium) while measuring weight gain in the samples, which is indicative of fuel oxidation. Although some difficulties existed due to sample loss during heating, the results of these tests generally confirm that oxidation rates of even highly corroded fuel are moderate and comparable with expected uranium behavior (Trimble, 1999). Rapid oxidation did not occur until temperatures well above standard temperature were reached. The ignition testing and TGA data demonstrate that even in the absence of water, corroded fuel pieces do not readily ignite under the conditions specified by WAC 173-303-090(5)(a)(ii).

Three factors further mitigate any potential ignitability of fuel wash sludge. First, significant oxidation of fuel pieces will occur as the fuel wash sludge accumulates under water in the knockout pots. Second, the sludge will be maintained in water during transport and storage, which further slows the oxidation rate. Moreover, sludge temperatures will be maintained at temperatures far below the fuel ignition temperatures during removal from the basins, in transport, and during storage at T Plant.

Based on the information summarized above, sufficient knowledge and test data have been developed to conclude that the sludge waste streams do not exhibit the characteristic of ignitability.

Corrosivity (D002/WSC2)

The sludge waste streams are not corrosive based on pH test data from samples of sludge from the floor and pit of the KE Basin, as well as canister sludge from both basins. The measured pH of water associated with the KE floor and pit sludge ranged from 7.52 to 7.95 (Makenas et al., 1996). The pH of the water associated with the canister sludge from KE ranged from 6.06 to 8.39 (Makenas et al., 1997); canister sludge from KW ranged from 6.3 to 8.0 (Makenas et al., 1998).

While no test data are available for KW floor and pit sludge, the KE sludge is considered to be representative of KW sludge. The KE and KW Basins were operated in a similar manner, including continuous pH adjustment of the basin water, such that similar pH properties would be expected.

Reactivity (D003)

The sludge streams are not designated as reactive (D003). Based on knowledge of the composition of the sludge and experience in handling sludge, the waste streams do not meet the

reactivity criteria that relate to violent reaction of waste under WAC 173-303-090(7)(a)(i), (ii), or (vi) through (viii). As discussed under ignitability above, floor and pit sludge, canister sludge, and highly damaged fuel have been sampled, shipped and handled in the laboratory without evidence of violent reaction or explosion. RSST, TGA and fuel ignition test data further confirm that these waste streams do not react violently or explode under the conditions specified by the regulations.

The sludge does not contain constituents that could release cyanides, sulfides, or other toxic gases, vapors or fumes (WAC 173-303-090(7)(a)(iv) and (v)). KE floor and pit sludge samples have been tested for cyanide and no cyanide has been detected (Makenas et al., 1996).

Regarding WAC 173-303-090(7)(a)(iii), "forms potentially explosive mixtures with water", it has been noted that sludge, particularly canister and fuel wash sludge, evolves hydrogen gas at a steady and predictable rate, both in the basins and under laboratory conditions. The gas generation phenomenon is caused by two factors related to the radioactive component of the waste stream: the oxidation of uranium and uranium hydride in water, and the radiolytic decomposition of hydrogenous material. While the radioactive component of the sludge is not strictly subject to regulation under WAC 173-303, the sludge as a whole has been evaluated against WAC 173-303-090(7)(a)(iii) and determined not to exhibit the characteristic of reactivity. The rationale for this determination is described below.

As with ignitability, the regulations do not specify numerical tests to determine whether a waste forms potentially explosive mixtures with water, leaving some ambiguity in determining whether a waste is reactive by this definition. In promulgating the characteristic of reactivity, EPA clarified the intent of the reactivity characteristic in the preamble to the rulemaking (45 FR 31109):

> *This definition was intended to identify wastes which, because of their extreme instability and tendency to react violently or explode, pose a problem at all stages of the waste management process.*

The preamble text describes a more vigorous and acute type of reaction than the hydrogen generation exhibited by the sludge waste streams. *Extreme instability* is typically associated with compounds such as sodium metal or sodium hydride, which react quickly and vigorously with water such that flammable gas evolution poses an immediate risk of explosion or violent reaction. In contrast, the K Basins sludge waste streams evolve hydrogen gas at a steady and controlled rate, without tendency toward violent or runaway reaction. When mixed with water, the sludge waste streams would continue to evolve hydrogen gas at the same steady, predictable and controlled rate.

The stability of the sludge is due in part to the extent of oxidation of uranium and uranium hydride. Floor, pit sludge and canister sludge have been in continuous contact with water for many years, such that little unoxidized uranium remains, and is distributed throughout the sludge matrix. After initial washing, fuel wash sludge may contain an increased amount of unoxidized uranium. However, this uranium will oxidize extensively under water in the knockout pots prior to removal from the basins. Radiolytic hydrogen gas generation occurs at a steady and

predictable rate based on the interaction of radiation emissions and hydrogenous material, and cannot accelerate or become violent.

The preamble text also states that reactive wastes are those which, because of their instability, *pose a problem at all stages of the waste management process*. Experience with the sludge, both in the basins and in the laboratory, indicates that it does not pose such a problem. The sludge has been present in the basins for many years. Simple passive venting of hydrogen gas has been sufficient to mitigate any hazard. Additionally, floor and pit sludge, canister sludge and corroded fuel have been sampled, shipped, and handled in the laboratory with only normal precautions (e.g., venting of containers) used for materials that are known to evolve some hydrogen gas. The normal, passive venting that is required for all transuranic radioactive waste prevents the buildup of potentially explosive concentrations of hydrogen gas. It should be noted that the packaging configuration for the sludge waste streams and the ventilation system in T Plant are more than adequate to prevent buildup of dangerous concentrations of hydrogen gas.

In summary, the sludge waste streams exhibit controlled, steady and predictable evolution of hydrogen gas, which is not subject to the instability or uncontrolled reactions with water that would be characteristic of a reactive waste. As a result, the sludge waste streams do not meet the definition of reactive waste.

Toxicity Characteristic Metals (D004-D011)

The corrosion products in the sludge streams consist largely of metal oxides, including some of toxicity characteristic metals. ICP analysis (without TCLP extraction) has been performed on many samples of floor, pit and canister sludge (Makenas et al., 1996; Makenas et al., 1997; Makenas et al., 1998). Cadmium, chromium, lead and silver have been measured in concentrations that could exceed the toxicity characteristic limits, and barium is consistently found in sludge, but the concentrations are below toxicity characteristic levels. Selenium has not been detected by ICP, although detection limits have frequently been above the level required to demonstrate that sludge is below toxicity characteristic levels. Due to difficulty in analysis by ICP, arsenic and mercury have not been reported from ICP analysis.

Additional data regarding arsenic, mercury and selenium are available from analysis of three samples of KE Basin backwash pit sludge by X-Ray Fluorescence (Bechtold, 1994). Arsenic, mercury and selenium were not detected in these samples. Detection limits of the X-Ray Fluorescence method were below the respective toxicity characteristic limits of these metals.

Due to the conditions under which the sludge has formed, it is believed that the primary metals of concern (cadmium, chromium, lead and silver), as well as other metals, would be relatively insoluble under TCLP conditions. To determine whether the sludge would designate for toxicity characteristic metals, the Spent Nuclear Fuel Project, with Ecology and EPA involvement and concurrence, developed data quality objectives (Makenas, 2000) and a sampling and analysis plan (Baker, Welsh and Makenas, 2000) to test composites of existing samples of KE sludge using the TCLP extraction. In accordance with the sampling and analysis plan, two composite samples were developed to be representative of KE Basin floor and pit sludge, while a third composite was representative of canister sludge. The sludge samples were analyzed for arsenic, barium, cadmium, chromium, lead, selenium and silver. The DQO participants, including

Ecology and EPA, concurred that mercury is not a constituent of concern (Makenas, 2000 and Bartz and Gadbois, 2000). Analysis of the sludge composite samples was performed on TCLP extracts and for total metals, which could allow some comparison with existing total metals data in KW Basin sludge.

The analysis data show that KE Basin sludge does not designate for toxicity characteristic metals (Loscoe, 2000). Table 2 provides a summary of these data. For simplicity, the table presents the average of the analysis result and any duplicate and replicate analyses performed. Variation among duplicate and replicate analyses was low and other quality control parameters indicate that data are usable for designation. Ecology and EPA have provided their concurrence with this designation for toxicity characteristic metals (Bartz and Gadbois, 2000).

Table 2 - Summary of TCLP Test Data

Metal	Regulatory Limit (mg/L)	Concentration (mg/L) - Average of result, duplicate and replicate analyses		
		KE Floor and Pit Sludge (222-S)	KE Floor Sludge (325 Laboratory)	KE Canister Sludge (325 Laboratory)
Arsenic	5.0	< 1.0	< 0.25	< 0.25
Barium	100.0	1.82	6.84	2.36
Cadmium	1.0	0.653	0.64	0.18
Chromium	5.0	0.222	1.17	0.33
Lead	5.0	< 1.0	0.87	1.33
Selenium	1.0	< 1.0	0.33	0.43
Silver	5.0	0.144	0.26	0.50

Since the KE and KW basins managed the same types of fuel and were operated in a similar manner, KW Basin sludge is expected to have the same designation. To confirm this expectation, both TCLP extracts and total metals digestions were performed on KE composite samples. These data could be used to form a ratio of the TCLP result to its corresponding total metal, which could be multiplied by KW sludge results to estimate the possible TCLP concentration of KW sludge. One limitation of this approach is that a meaningful ratio of TCLP to total metal can only be determined if the total metal result is above its detection limit. Using this approach, Table 3 provides estimated KW canister sludge TCLP concentrations for some toxicity characteristic metals. Within the limitations of the available data, this serves to confirm that KW canister sludge should not designate for toxicity characteristic metals.

Table 3 - Estimation of KW Sludge TCLP Concentration

Metal	Ratio of TCLP/Total	KW Canister Sludge Total metals (mg/kg)[1]	Estimated TCLP (mg/l)	Regulatory Limit
KE Canister Sludge Composite				
Ba	0.03491	121.59	4.25	100
Cr	0.00667	184.25	1.23	5
KE Floor/Pit Sludge Composite (222-S)				
Ba	0.02117	121.59	2.57	100
Cd	0.02098	45.36	0.95	1
Cr	0.00069	184.25	0.13	5
Pb	< 0.00342	453.81	1.55	5
KE Floor Sludge Composite (325)				
Ba	0.12220	121.59	14.86	100
Cd	0.01384	45.36	0.63	1
Cr	0.00600	184.25	1.11	5
Pb	0.00854	453.81	3.87	5

[1] This value is the average total metal concentration in 8 samples of as-settled sludge (provided in Makenas et al., 1998, Appendix B). When one or more results were below detection levels, 0.5 times the reported limit of detection was used to form the average.

A number of limitations exist to the approach provided in Table 3. No estimates could be obtained for arsenic because the KW canister sludge analyses did not provide arsenic results. Additionally, no estimates could be established for selenium or silver because these metals were below the limit of detection in all of the KE sludge total metals analyses. Further, the KW canister sludge data had severely elevated detection limits for some metals, particularly cadmium, lead, selenium and silver. In some cases, many or all of the KW canister sludge samples were less than these elevated detection limits for metals, which results in biased mean of the metals concentration. One approach to offsetting this bias is to set results below detection limits to a value equal to one half the detection limit (Gilbert, 1987). This approach was used to establish the mean concentration of the total metal concentration in KW canister sludge used in Table 3.

Despite these limitations, the data provide general confirmation that KW sludge designates the same as KE sludge. Of the toxicity characteristic metals, chromium and lead are consistently found in sludge in the highest concentrations. The estimated KW TCLP concentrations confirm that KW sludge would not fail TCLP for chromium and lead. Similarly, cadmium and barium calculate out to an estimated TCLP concentration below the regulatory limit. When combined with the process knowledge that KE and KW operations were similar, this provides reasonable assurance that KW sludge would pass TCLP testing just as the KE sludge composites did.

Toxicity Characteristic Organics (D012-D043)

The two sludge waste streams do not designate for the toxicity characteristic pesticides, herbicides or other organics based on knowledge of the fuel manufacturing process and fuel storage processes in the KE and KW Basins and test data. As manufactured for use in Hanford's N-Reactor, the fuel was highly purified uranium metal with a zircaloy cladding; no organic compounds could be present in the fuel. None of the specific D012 - D043 toxicity characteristic constituents are known to have been used in, applied to, or discharged to the basins.

As confirmation of this knowledge, analysis of five sludge samples from the KE Basin and two samples from the KE Weasel Pit for volatile and semivolatile organic compounds identified none in concentrations approaching the toxicity characteristic limits (Makenas et al., 1996). It should be noted that there were some quality control problems with these samples, particularly low-level contamination of blanks and poor surrogate recoveries for semi-volatile organics. Nevertheless, use of these data as semi-quantitative data provides reasonable confirmation that the sludge does not designate for toxicity characteristic organic constituents.

While participating in the development of the data quality objectives and sampling and analysis plan for TCLP testing of the sludge (see previous section), Ecology and EPA concurred that toxicity characteristic organic compounds are not constituents of concern in the KE and KW sludge waste streams (Bartz and Gadbois, 2000).

CRITERIA DESIGNATION

Toxicity

The sludge waste streams do not designate as toxic dangerous waste based on ICP, anion analysis, X-ray diffraction and process knowledge that have been used to identify the overall

chemical composition of the KE and KW sludge. This composition is described in *105-K Basin Material Design Basis Feed Description for Spent Nuclear Fuel Project Facilities, Volume 2*, (Pearce, 2000). The majority of the sludge is in the form of insoluble solids (e.g., sand) and the oxides and hydroxides of aluminum, iron, zirconium, and uranium, as well as other metals in trace concentrations. Using the book designation methodology of WAC 173-303-100(5)(b) and these composition data, neither sludge stream is a dangerous waste by the toxicity criteria.

Only five of the discrete chemical constituents identified in *105-K Basin Material Design Basis Feed Description for Spent Nuclear Fuel Project Facilities, Volume 2* are Toxic Category D or more toxic based on data from the *Registry of Toxic Effects of Chemical Substances*. The major constituents in the sludge waste streams, including uranium metal, uranium hydride, and oxides of aluminum, calcium, iron, magnesium, silicon, sodium and uranium, are either less toxic than Toxic Category D or have no relevant toxicity data in the *Registry of Toxic Effects of Chemical Substances*.

Table 4 presents the equivalent concentration calculation for the five constituents that are toxic in accordance with WAC 173-303-100(5)(b). The columns titled "Max Weight Percent" list the highest concentration of each constituent in the various substreams from the appendices of *105-K Basin Material Design Basis Feed Description for Spent Nuclear Fuel Project Facilities, Volume 2*. (It should be noted that considerable conservatism exists by use of the highest values from each substream and by using dry weight percents of sludge.) The columns titled "Equivalent Concentration" list the calculated equivalent concentration of toxic constituents as specified by WAC 173-303-100(5)(b). The total equivalent concentrations of 0.00054% for floor and pit sludge and 0.00007% for canister and fuel wash sludge are below the threshold equivalent concentration of 0.001% to be regulated as a toxic dangerous waste.

Table 4 - Washington Toxicity Book Designation

Constituent/CAS#	Toxic Category	Floor and Pit Sludge		Canister and Fuel Wash Sludge	
		Max. Weight Percent	Equivalent Concentration	Max. Weight Percent	Equivalent Concentration
Silver oxide 20667-12-3	D	0.0021	0.00000021	0.011	0.0000011
Bismuth oxide 1304-76-3	D	0	0	0.047	0.0000047
Cadmium oxide 1306-19-0	C	0.019	0.000019	0.0096	0.0000096
Cuprous oxide 1317-39-1	C	0.091	0.000091	0.055	0.000055
Thallium oxide 1314-32-5	B	0.043	0.00043	0	0
Total Equivalent Concentration			0.00054		0.00007

Persistence

Based on knowledge of the KE and KW Basin operations and test data, the sludge waste streams do not designate as persistent waste. Except for a brief period in 1980 and 1981 during which algicides were applied to the basin water, halogenated organic compounds were not used in or discharged to the basins. Semivolatile organic analysis of sludge samples identified no halogenated organic compounds other than the PCBs previously discussed in the section on

Regulation under Other Laws (Makenas et al., 1996; Makenas et al., 1997; Makenas et al., 1998). While already regulated under TSCA, the concentration of PCBs were evaluated against the persistence criterion as well, and found to be below the regulatory threshold of 0.01% by weight based on the test data described below.

Seven samples of floor and pit sludge were tested for PCBs as described in Makenas et al., 1999. The PCB concentration of the floor and pit sludge samples are provided in Table 5, using the adjusted concentration of PCBs (Makenas et al., 1999, Appendix B) in settled sludge and averaging duplicate/replicate analyses of the same sample. The mean concentration of these samples is 46 ppm, or 0.0046% by weight.

Table 5 - Summary of PCB Test Data for Persistence Designation

Sample Number	Sampling Location	Concentration in Settled Sludge (ug/g)
KES-I-15	KE Basin floor	63
KES-L-1	KE Basin floor	< 17 (not detected)
KES-A-2	KE Basin floor	< 14 (not detected)
KES-N-5	KE Basin floor	< 79 (not detected)
KES-H-8	KE Basin floor	< 16 (not detected)
KES-P-16	Weasel pit	36
KES-R-18	Weasel pit	94
	Mean concentration[1]	46

1 Nondetected results were used at the method quantitation limit

PCB concentrations in canister sludge were much lower than in the floor and pit sludge. Nine samples of KE canister sludge were analyzed, ranging from nondetectable to a maximum of 1.1 ug/g (Makenas et al., 1997). Seven samples of KW canister sludge were analyzed, ranging from nondetectable to a maximum of 5.73 ug/g.

The sludge streams do not designate as WP03 for polycyclic aromatic hydrocarbons (PAHs) based on test data. A number of sludge samples have been tested for Total Organic Carbon (TOC) and the TOC concentrations are far below the 1% PAH threshold for regulation as a WP03 waste (Makenas et al., 1996; Makenas et al., 1997; Makenas et al., 1998).

Conclusion

Test data from samples of KE and KW sludge waste streams, combined with knowledge of the waste generating process and the composition and properties of the sludge, show that the sludge waste streams will not designate as a dangerous waste under WAC 173-303.

References

Abrefah, J., F.H. Huang, W.M. Gerry, W.J. Gray, S.C. Marschman, and T.A. Thornton, 1999. *Analysis of Ignition Testing on K-West Basin Fuel*, PNNL-11816, Pacific Northwest National Laboratory, Richland, Washington.

Baker, R.B., B.J. Makenas and J.A. Pottmeyer, 2000, *Observations of K Basins Sludge Behavior in Relation to Sludge Container Design and Storage at T Plant*, HNF-6705, Rev. 0, Fluor Hanford, Richland, Washington.

Baker, R.B., T.L. Welsh, and B.J. Makenas, 2000, *Sampling and Analysis Plan for Sludge from the 105-K Basins to Support Transfer to and Storage in T Plant*, HNF-6479, Rev. 0, Fluor Hanford, Inc., Richland, Washington.

Bartz, J.K. and L. Gadbois, 2000 (Letter to P.G. Loscoe, "Response to 'Transmittal of Final Laboratory Data Reports for Toxicity Characteristic Leaching Procedure (TCLP) Analyses Performed on K-Easte (KE) Basin Sludge Samples'", dated September 14, 2000), Washington State Department of Ecology, Kennewick, Washington.

Bechtold, D. B., 1994, *Report of Laboratory Test Plan for Analysis of KE Basin Backwash Pit Samples*, WHC-SD-NR-TRP-021, Rev. 0, Westinghouse Hanford Company, Richland, Washington.

Bechtold, D.B., 2000a (Internal Memorandum to F.H. Steen, "Reactive System Screening Tool Tests of KE Basin Sludge Composites" dated July 10, 2000), 8D500-DBB-00-038, Fluor Hanford, Richland, Washington.

Bechtold, D.B., 2000b (Internal Memorandum to F.H. Steen, "Reactive System Screening Tool Tests of KE Basin Sludge Composites" dated August 31, 2000), 8D500-DBB-00-046, Fluor Hanford, Richland, Washington.

Gilbert, R.O., 1987, *Statistical Methods for Environmental Pollution Monitoring*, Van Nostrand Reinhold Company, New York.

Loscoe, P.G., 1999 (External Letter to R.D. Hanson of Fluor Daniel Hanford, Inc., "K Basins Sludge Classification" dated December 2, 1999), 00-SFO-043, Department of Energy Richland Operations Office, Richland, Washington.

Loscoe, P.G., 2000 (External Letter to J.K. Bartz of Washington Department of Ecology and L.E. Gadbois of Region X Environmental Protection Agency, "Transmittal of Final Laboratory Data Reports for Toxicity Characteristic Leaching Procedure (TCLP) Analysis Performed on K-East (KE) Basin Sludge Samples" dated August 8, 2000), 00-SFO-135, Department of Energy Richland Operations Office, Richland, Washington.

Makenas, B.J., T.L. Welsh, R.B. Baker, and G. R. Golcar, 1996, *Analysis of Sludge from Hanford K East Basin Floor and Weasel Pit*, WHC-SP-1182, Rev. 0, Westinghouse Hanford Company, Richland, Washington.

Makenas, B.J., T.L. Welsh, R.B. Baker, E.W. Hoppe, A.J. Schmidt, J. Abrefah, J.M. Tingley, P.R. Bredt, and G.R. Golcar, 1997, *Analysis of Sludge from Hanford K East Canisters*, HNF-SP-1201, Rev. 0, prepared by DE&S Hanford, Inc. for Fluor Daniel Hanford, Inc., Richland, Washington.

Makenas, B.J., T.L. Welsh, R.B. Baker, G.R. Golcar, P.R. Bredt, J. Schmidt, and J.M. Gingley, 1998, *Analysis of Sludge from Hanford K West Canisters*, HNF-1728, Rev. 0, prepared by DE&S Hanford, Inc. for Fluor Daniel Hanford, Inc., Richland, Washington.

Makenas, B.J., T.L. Welsh, R.B. Baker, A.J. Schmidt, K.L. Silvers, P.R. Bredt, C.H. Delegard, E.W. Hoppe, J.M. Tingey, and A.H. Zacher, 1999, *Supplementary Information on K-Basin Sludges*, HNF-2367, Fluor Daniel Hanford, Inc, Richland, Washington.

Makenas, B.J., 2000, *Data Quality Objectives for Analysis of Hanford K Basin Sludge to Support Transport to and Storage in T Plant*, HNF-6974, Fluor Hanford, Inc., Richland, Washington.

Pearce, K.L., 2000, *105-K Basin Material Design Basis Feed Description for Spent Nuclear Fuel Project Facilities, Volume 2, Sludge*, HNF-SD-SNF-TI-009, Volume 2, Fluor Hanford, Richland, Washington.

Trimble, D.J., 1999, *Oxidation Kinetics of K Basin Fuel*, HNF-4206, prepared by Duke Engineering and Services Hanford, Inc., Northwest Operations, for Fluor Daniel Hanford, Inc., Richland, WA.

APPENDIX G

PRELIMINARY SAFETY EQUIPMENT LIST

Table of Contents

1.0 PURPOSE AND SCOPE 2

2.0 SOURCE DOCUMENTATION 3

2.1 Seismic 3

2.2 Heat Transfer 4

2.3 Fire Hazards 5

2.4 Criteria Document 6

2.5 Hazards Evaluation 6

2.6 Criticality 8

2.7 Emergency Planning 9

3.0 METHODOLOGY 10

4.0 PRELIMINARY SAFETY EQUIPMENT LIST (SEL) 11

4.1 Safety Classification 11

4.2 SEL Key Assumptions 11

1.0 PURPOSE AND SCOPE

The purpose of a Safety Equipment List (SEL) is to identify the Structures, Systems, and Components (SSCs) classified as Safety Class or Safety Significant based on the criteria in Table 5 of HNF-PRO-704, *Hazard and Accident Analysis Process*. The SEL is used to determine the design requirements for each of the SSCs to enable it to perform its safety function in accordance with DOE Order 6430.1A. The preliminary SEL (PSEL) developed here is limited in scope to those analyses and SSCs that support the K-Basin Sludge Handling Project (Spent Nuclear Fuels Project A. 13(b)).

2.0 SOURCE DOCUMENTATION

Several documents provide source information to this PSEL. These are listed below and discussed in the following paragraphs.

- HNF-6033, *Seismic Evaluation of the T Plant 221-T Building for Interim Storage of K Basin Sludge, 200 West Area, Hanford Site*, dated January 2001.
- HNF-6035 draft, *Criteria Document for the Sludge Storage at T Plant Safety Assessment*, dated August 2000.
- HNF-6435 Rev 0, *Preliminary Criticality Study for K Basin Sludge Containers at T-Plant*, dated August 2000.
- HNF-6527 Rev 0, *Hazards Evaluation for Storage of Spent Nuclear Fuel Sludge at the Solid Waste Treatment Facility*, dated August 2000.
- HNF-6579 Rev A, *Baseline Design Criteria for the Sludge Handling System, SNF Project A-013(b)*, dated October 2000.
- HNF-6625 Rev 0, *Preliminary Accident Analysis for Storage of K Basin Sludge in T-Plant*, dated September 2000.
- HNF-6704, *Gas and Heat Generation Analysis of K-Basin Sludge Storage in T Plant*, dated July 2000.
- HNF-6964 draft, *Safety Analysis Addendum for T Plant Sludge Storage*, dated January 2001.
- HNF-7150, *Structural Design Concepts for Seismic Upgrades to the 221-T Pool*, dated October 2000.
- HNF-7172, *Supplemental Analysis of Gas and Heat Generation of K Basin Sludge Storage in T-Plant*, dated October 2000.
- HNF-7692, *Sludge Seismic Failure Mode Evaluation for the Building 221-T, Section 2 Pool*, dated March 2001.
- HNF-SD-CP-FHA-002 Rev. 1 Draft, *Fire Hazards Analysis for T Plant Complex*, dated September 2000.
- HNF-SD-TP-SARP-017 Rev. 2, *Safety Analysis Report for Packaging (Onsite) Multi-canister Overpack Cask*, dated December 2000.
- HNF-SD-PRP-HA-014 Rev. 5, May 2000, Treatment Facility Hazards Assessment, Fluor Hanford, Richland, Washington.
- HNF-SD-WM-ISB-006, Interim Safety Basis
- HNF-SD-WM-TSR-003, Revision 3, T Plant Interim Operational Safety Requirements.

2.1 Seismic

<u>HNF-6033, Seismic Evaluation of the T Plant 221-T Building for Interim Storage of K Basin Sludge, 200 West Area, Hanford Site</u>

<u>HNF-7150, Structural Design Concepts for Seismic Upgrades to the 221-T Pool,</u>

HNF 7692, Seismic Failure Mode Evaluation For the Building 221-T, Section 2 Pool

As detailed in HNF-6579, *Baseline Requirements Document*, the Conceptual Design Document was required to assume that the seismic input accelerations would be based on Performance Category 3 for an existing structure in accordance with HNF-PRO-97.

The initial seismic report (*Seismic Evaluation of the T Plant 221-T Building for Interim Storage of K Basin Sludge, 200 West Area, Hanford Site*, HNF-6033) evaluates potential earthquake effects on the ability of the 221-T building to store K Basin sludge safely. The seismic evaluation demonstrated that the 221-T building, including cells, deck, pool, roof, and exterior walls, meets the seismic design and evaluation criteria for Performance Category 3 (PC3) for existing facilities in accordance with HNF-PRO-97 and DOE-STD-1020-94. However, this report had a limitation in that all existing pool cracks had to be repaired in order for pool to meet the PC3 criteria. This represents the ability for the structure to withstand a seismic event with an average return period of about 10,000 y, or an annual probability of exceedance of 1×10^{-4}.

A follow-on study (*Seismic Failure Mode Evaluation For the Building 221-T, Section 2 Pool*, HNF-7692) was performed to understand the failure mode of the pool walls and pool cover based on the known location of cracks in the concrete pool. This study demonstrated that a PC3 seismic event would result in minimal pool wall displacement and that the anticipated new cover (described in HNF-7150, *Structural Design Concepts for Seismic Upgrades to the 221-T Pool*) would not fall into the pool. The HNF-7692 analysis assumed the cracks in the pool are located as identified by T Plant in 1993 (WHC-SD-WM-SA-023, PWR Core II Storage Pool Structural Seismic Qualification – T Plant) and that these cracks would not be repaired over the storage life of the containers.

Once the project and the facility have established the final Performance Category for the Sludge Handling Project in accordance with DOE –STD-1021-93, HNF-6033 will be revised as needed.

2.2 Heat Transfer

HNF-6704, Gas and Heat Generation Analysis of K-Basin Sludge Storage in T Plant

HNF-7172, October 2000, Supplemental Analysis of Gas and Heat Generation of K Basin Sludge Storage in T-Plant, Fluor Hanford, Richland, Washington

The initial heat transfer study (*Gas and Heat Generation Analysis of K-Basin Sludge Storage in T Plant*, HNF-6704) indicated that, given an average uranium metal content of 44% for the sludge, the water in the pool would be required to be cooled to 78 degree F and/or 20,000 BTU/HR would need to be removed from the pool. This study, which was a required input to the conceptual design, resulted in the addition of a chiller to the pool as detailed in the Conceptual Design Document (CDD). Since the safety analysis is not yet completed, the conceptual design conservatively includes a redundant back-up pool cooling system to ensure that project scope and cost are bounded.

The analysis documented in HNF-6704 assumed a very conservative average uranium metal particle size (250 microns), enhancement factor (3), and thermal conductivity (that of water) for the sludge. More recent laboratory sample results indicated that these values may have been too conservative. A supplemental heat transfer report (*Supplemental Analysis of Gas and Heat Generation of K Basin Sludge Storage in T-Plant*, HNF-7172), which analyzed three cases of Type 2 Sludge storage options and one case of Type 1 Sludge, was performed to reflect the newer laboratory data. The supplemental analysis used an average uranium metal particle size of 500 microns as well as a lower enhancement factor (Both 1 and 2), and a different thermal conductivity. The Supplemental Analysis concluded that (1) heat generation is not a concern for Type 1 containers, and (2) Type 2 containers can be stored safely within the pool without pool cooling. Based on the results of the supplemental study, there is no requirement for a safety class or safety significant water addition system for the Type 1 containers or for the pool cooling system for the Type 2 containers.

The supplemental analysis also indicated that, if active ventilation was lost in the T Plant canyon, it would take a minimum of 10 days for the hydrogen levels to reach 1% (lower control point for hydrogen) in a process cell. If sludge containers were stored on the canyon deck instead of in the process cells, 50 days would be required to reach 1% in the canyon under the same conditions. Based on the length of time available to respond to a loss of ventilation event before hydrogen concentrations could reach the lower control point as well as the fact that there are no other hazards associated with sludge storage that require the ventilation system to be operable, the ventilation system fans are classified as General Service.

During definitive design, the results of the existing heat transfer analyses will be verified or a final heat transfer analysis will be conducted based on the sludge input parameters in the Sludge Databook (HNF-SD-HNF-TI-015, Volume 2). The Sludge Database is to be released in Spring 2001.

2.3 Fire Hazards

HNF-SD-CP-FHA-002 Rev. 1, Fire Hazards Analysis for T Plant Complex - Draft

This document is still in draft form, and a final draft was not available for review at the time of this PSEL development. Accordingly, this assessment is not complete and may change when more information becomes available.

The fire hazards analysis identifies previous analyses associated with T Plant (WHC 1995a and HNF 6459) that involve fires in the loading bay, canyon, and the Head End. Sludge containers will not enter the Head End.

Based on the expected sludge receipt process, the sludge containers will not be removed from the MCO transport cask until the tractor is removed. The MCO transport cask is fire-rated and would protect the containers in the event of a fire.

Type 1 containers will be stored in a process cell free of combustibles. Type 2 containers will be stored under water. For short periods of time the containers will be exposed in the canyon. Initially this will occur during MCO transport cask unloading, and during periodic Type 1 container weighing.

Combustible loading near the loading tunnel will be minimized, and manned entry into the canyon during container movement will not be allowed, thus eliminating the possible introduction of combustibles. Although a fire in the canyon at that time could expose process cell containers to heat drawn in via the ventilation system, it is not expected to be sufficient to put the containers at risk of overheating.

2.4 Criteria Document

HNF-6035, Rev 0, Criteria Document for the Sludge Storage at T Plant Safety Assessment - Draft

This document contains no requirements for safety classification of SSCs.

2.5 Hazards Evaluation

HNF-6527 Rev 1, Hazards Evaluation for Storage of Spent Nuclear Fuel Sludge at the Solid Waste Treatment Facility - Draft

This document provides a systematic compilation of all the hazards associated with the sludge receipt and storage mission. Eight of those hazards were identified for further analysis. These were later binned into three representative accidents and analyzed on a unit container inventory basis in HNF-6625. Two of the hazards were associated with cold container overpressure (i.e., vent failure and hydrogen gas buildup), two were associated with hot container overpressure, and four were associated with container or cover block drops. The hot container overpressure event was later determined to not be credible given the sequence of events necessary to achieve that accident (i.e., loss of pool water, failure of pressure relief device, thermal heat up of container over a period of many days, no operator response).

Once the controls are agreed upon by facility management, the hazards identified in this document should be reviewed a second time to ensure that the identified controls are appropriate.

HNF-6625 Rev 1, Preliminary Accident Analysis for Storage of K-Basin Sludge in T-Plant

This document derives dose consequences for unit curie and unit kilogram container inventories of sludge for three representative accident scenarios:

- Container failure due to hot overpressure[1] (requires heat source and failed relief vent)

[1] The hot container overpressure event has been determined to be beyond design basis.

- Container failure due to cold overpressure (gas accumulation with plugged vent)
- Container failures due to impact (container or cover block drop)

Since container sludge inventories were not yet finalized, unit dose consequences were calculated in order to facilitate the consequence analysis to be documented in HNF-6964. HNF-6964 must be consulted to identify the radiological and hazardous consequences based on the specific inventories assumed.

HNF-6964, Safety Analysis Addendum for T Plant Sludge Storage - Draft

The safety analysis addendum for sludge storage is still in draft form, and a final draft was not available for review at the time of this PSEL development. Accordingly, this assessment is not complete and may change when more information becomes available. Based on verbal discussions with T Plant facility representatives and contractors, the following information was obtained.

It is anticipated that the safety addendum document will justify that a hot container overpressure event is not credible because the sequence of events necessary to achieve that accident are not credible (i.e., loss of pool water, failure of relief vent, thermal heat up of container over a period of many days, no operator response). The consequences of the other two accidents (container failure due to cold overpressure and container failures due to impact) were evaluated using the unit container inventory results of HNF-6625 and the sludge stream compositions given in HNF-SD-SNF-TI-009, Volume 2. It was determined that the consequences of both accidents were far below the Risk Evaluation Guidelines (REGs). Thus, there are no requirements for safety SSCs as a result of exceeding or challenging REGs for either of these two bounding accidents.

The SEL will be re-evaluated during the definitive design stage and at the time of release and approval of HNF-6964 (safety addendum). If different bounding accidents were determined in the final safety analysis report, the safety equipment list would need to be derived and/or evaluated based on those accidents.

HNF-SD-TP-SARP-017 Rev. 2, Safety Analysis Report for Packaging (Onsite) Multi-canister Overpack Cask

The sludge containers will be transported to T Plant in a Multicanister Overpack (MCO) Cask. This report takes no credit for the integrity of the sludge container inside the MCO and so places no requirements on the container design.

2.6 Criticality

HNF-6435 Rev 0, Preliminary Criticality Study for K Basin Sludge Containers at T-Plant.

The purpose of the Criticality Safety Evaluation Report (CSER) is to determine whether there is a criticality hazard, and, if so, to verify that the controls and/or design features provide a double contingency against the possibility of an accidental criticality, i.e., at least two independent, unlikely, concurrent failures must occur before a criticality is possible (DOE O 420.1). Any SSC that is required to maintain a double contingency against an accidental nuclear criticality is automatically designated Safety Class per HNF-PRO-704.

The results of this preliminary criticality study indicate that there are potential sludge and container geometries such that the sub critical safety limit ($k_{eff} = 0.95$) could be exceeded. The cover block drop identified in HNF-6527 could be a mechanism by which the sub critical safety limit could be exceeded. The conservative assumptions made in the supporting analysis include:

1) the containers were full of sludge (current plans are that they would be about 50% full).
2) the containers walls were 1/4 in steel (current plans are that the Type 2 container walls would be 1 in thick), and
3) no credit was taken for neutron absorber material within the sludge (in order to avoid this as a criticality safety specification on sludge).

Additional criticality analyses were performed for transportation of containers. In this analysis the one-inch wall thickness of Type 2 containers was credited for a reduction in k_{eff}.

The likelihood of exceeding the sub-critical safety limit with Type 2 sludge is greater due to its higher uranium enrichment (A large fraction of the Type 2 sludge is 1.25 percent enriched). Therefore, it has been conservatively assumed that the Type 2 container storage system will have a safety class function to protect the containers from a cover block drop until further criticality analysis has been completed to show otherwise. The specific requirements and performance criteria of the storage system components are defined in the attached SEL.

For the most part, the Type 1 sludge is less reactive and of lower enrichment (0.95 percent enriched). Based on the existing CSER analyses for sludge at the K Basins, the known physics of the Type 1 sludge at K basin, and envisioned upset storage configurations/conditions, the SEL is based on the assumption that criticality will be shown not to be credible for Type 1 material. Currently, a follow-up analysis is in progress and it is anticipated that this additional analysis will show it is not possible to exceed the sub critical safety limit under any geometry for the Type 1 material.

2.7 Emergency Planning

HNF-SD-PRP-HA-014 Rev. 5, May 2000, Treatment Facility Hazards Assessment, Fluor Hanford, Richland, Washington.

HNF-PRO-704 requires that SSCs be identified as safety class or safety significant when used to monitor the release of radioactive or hazardous materials to the environment where the monitor's output initiates emergency response plan actions or operator actions to place the facility in a safe condition. HNF-SD-PRP-HA-014 Rev. 5 does not yet consider the K Basin sludge as hazardous material inventory. Therefore, it is premature to conclude that there are no emergency response actions associated with that mission that might be classified safety class or safety significant on the basis of its use in initiating emergency response actions.

3.0 METHODOLOGY

The methodology and rational for safety classification of SSCs is consistent with the process established in HNF-PRO-704. This SEL establishes the design, testing and QA requirements for the identified SSCs and, if necessary, for their subsystems and individual components. Consideration is given to the safety function and the capability to restore the safety function in the event of a component failure. For each system of interest, the following is to be done:

- The safety class, safety significant, or defense-in-depth function(s) performed or supported by the SSC are identified. Reference is made to the applicable accident(s) in the safety analysis document establishing the required safety functions.

- Performance requirements for the system to meet the required safety functions are identified.

Within each system the minimum number of components necessary to support the system safety function(s) are identified. The approach used for this identification is a failure modes and effects analysis (FMEA). The evaluations are intended to be a qualitative evaluation of the system interactions and effects of the individual component failures. The FMEA is appropriate for systems where the relationship between components and the effects of their failure on the system operability is clear. The safety functions of the sludge storage facility in T Plant do not involve complex systems. The component interactions and the effect of component failure on the system safety function can be readily established using the FMEA approach.

Each system is decomposed into components to a level of detail sufficient to support procurement, testing, operation and maintenance of the system. The component function and failure mode(s) are identified. For each failure mode, the effect of component failure (assuming credible failures of other non-safety systems and components) on the system safety functions are examined. All failure modes are considered, but only those with a potential to affect the safety function(s) are listed in the SEL.

If failure of a single component could result in the loss of the safety function, then the component is assigned the appropriate safety classification. Factors considered in the selection of safety components include the reliability required to achieve an acceptable level of risk. In cases where facility safety would be challenged only after an extended period of SSC in-operability such as through negligence, a judgment was made to refrain from classifying the SSC as safety class or safety significant because the accident scenario was clearly beyond design basis or constituted accident recovery.

4.0 PRELIMINARY SAFETY EQUIPMENT LIST (SEL)

4.1 Safety Classification

Awaiting new Criticality Safety Evaluation Report results, the project has conservatively assumed that there is a potential to exceed the criticality safety limit with storage of Type II containers in the pool cell, hence, the SSCs used to maintain or protect Type II container spacing in the pool cell will be conservatively designated Safety Class (SC). These are:

- Type II rack assemblies
- Pool cell inner liner assembly
- Pool cell outer liner assembly
- Pool cell cover block catchers

The safety function of the Type II rack assemblies are to 1) maintain container spacing under seismic PC3 loads and 2) to protect the containers from non-coverblock heavy load drops which could crush the containers or cause them to lose their sludge contents. The safety function of the pool cell cover block catcher is to protect the rack and containers from a modified pool cover block drop which causes a criticality safety concern. Because the first three assemblies form one integrated structure, they will be analyzed together. Therefore the pool cell liners are also designated SC due to the structural support they provide to the rack assemblies. Note that the SC designation for pool cell liners could be removed if structural analyses on the rack assemblies could be performed such that no credit is taken for the presence of pool cell liners. As currently designed this analysis approach does not appear practical.

4.2 SEL Key Assumptions

1. Criticality is not a concern for Type 1 sludge in any geometry. That is, any number of Type 1 containers could fail and release their contents into the dry storage cell without exceeding the criticality safety limit. This will be verified by further analysis.

2. Failure of a single Type 2 container in the pool cell (with water in pool) will not produce the possibility of an accidental criticality. This will be verified by further analysis.

3. A failed Type 2 container would be detected (by its contamination of the pool water), removed from the pool and placed in an overpack in a dry storage cell. Because of the robust design of the Type 2 containers, failure during pool storage is considered to be a unlikely event. The presence of two failed Type 2 containers in the pool cell at the same time is therefore not considered credible.

4. A maximum of two overpacks can be physically placed in each dry cell as there are only two available overpack rack slots per storage cell. It is assumed that the sludge stored in the

overpacked container is no longer chemically reactive and that criticality is not a concern for two overpacks containing Type 2 containers in a Type 1 storage configuration. This will be verified by further analysis.

5. Because of the multiple barriers (primary SS Liner, Secondary CS Liner, and 7 foot thick pool walls) containing the water in the pool and the lack of any drain, accidental draining of the pool to the extent of uncovering the containers is not considered a credible event. Therefore a Type 2 container failure due to hot overpressure is not considered to be a credible event. Design features and controls that protect this assumption will be further reviewed during definitive design.

6. The cover block catchers are designed to withstand the impact of a falling thinner (2 foot thick) pool cover block, but not a full-thickness cover block as is used, for example, on the dry storage cells. It is assumed, therefore, that administrative controls will be required to prevent the movement of the larger heavier 6 foot thick cover blocks over the pool area. The only anticipated facility need to move a larger cover block over the pool would be to place them over the rail tunnel, which is not expected as it would negatively effect facility ventilation system since the rail tunnel provides a major source of infiltration (since the supply fans no longer operate), or to remove a cover block from the canyon.

7. Because of controls on combustibles in or near the dry storage cells, a fire engulfing a container and causing it to overheat is not considered credible.

Table 1: PRELIMINARY T PLANT SLUDGE STORAGE SAFETY EQUIPMENT LIST

SSC	MITIGATED ACCIDENTS	SAFETY FUNCTIONS	FUNCTIONAL REQUIREMENTS	PERFORMANCE CRITERIA	COMMENTS
Type 1 Container Storage System	None	None	The Type 1 container rack maintains containers in an upright position.	The Type 1 container rack must fit the Type 1 containers and is designed to maintain the containers in an upright position under PC3 seismic loads.	Weasel pit CSER implies that a criticality is not an issue for Type 1 sludge. This must be further verified via the CSER.
COMPONENT IDENTIFICATION	**COMPONENT FUNCTION**	**COMPONENT FAILURE MODES**	**EFFECT OF FAILURE ON SSC SAFETY FUNCTION**	**COMPONENT SAFETY CLASSIFICATION JUSTIFICATION**	**COMPONENT SAFETY CLASSIFICATION**
Rack assembly	Maintain Type 1 containers in upright position	Structural failure allowing Type 1 containers to fall over	There currently is no safety function for this component.	It is anticipated that further criticality analysis will show that there is no criticality concern with respect to sludge stored in Type 1 containers.	GS but currently being designed to PC3 standards
Liner assembly	Contain container leakage	Failure to contain leakage	Failure could result in minor local contamination within the dry cell.	N/A	GS
Base assembly	Levels and supports liner rack	Structural failure might inhibit container removal if rack assembly is cocked.	None	N/A	GS
Leak detection assembly	Detect liquids collected in sump	Failure to detect leakage	None	N/A	GS
Leakage removal system	Remove leakage from sump	fail to remove leakage	None	N/A	GS

Table 1: PRELIMINARY T PLANT SLUDGE STORAGE SAFETY EQUIPMENT LIST

SSC	MITIGATED ACCIDENTS	SAFETY FUNCTIONS	FUNCTIONAL REQUIREMENTS	PERFORMANCE CRITERIA	COMMENTS
Type 2 Container Storage System	Possible criticality due to container or cover block drop	Maintain container spacing under seismic loads and credible drop impacts.	The Type 2 container rack must fit the Type 2 containers and maintain the containers in an upright position and maintain spacing under PC3 seismic loads.	Must withstand PC3 seismic loads and provide container protection from heavy object drops such as containers or cover blocks.	Criticality issue is to be further analyzed
COMPONENT IDENTIFICATION	**COMPONENT FUNCTION**	**COMPONENT FAILURE MODES**	**EFFECT OF FAILURE ON SSC SAFETY FUNCTION**	**COMPONENT SAFETY CLASSIFICATION JUSTIFICATION**	**COMPONENT SAFETY CLASSIFICATION**
Rack assembly	Maintains spacing. Protects container from non-cover block falling objects. Adds rigidity to liner assembly.	Structural failure under seismic loads. Failure to protect containers in rack from falling objects.	Possibility of exceeding criticality safety limit if rack fails to protect containers from non-coverblock drops or seismic loads.	The results of the preliminary criticality study indicates that there are potential sludge and container geometries such that the sub critical safety limit (keff = 0.95) could be exceeded. The rack assembly is part of the rack/liner structural unit which performs its safety function as a unit.	SC
Inner liner assembly	Adds structural rigidity to rack assembly and contains pool water.	Structural failure under seismic loads. Liner leakage.	Possibility of exceeding criticality safety limit if failure of liner causes rack failure to protect containers from non-coverblock drops or seismic loads. Failure to contain water is anticipated to be an ALARA issue only as the corresponding drop in pool level could cause a dose rate increase in the canyon. The canyon is not manned.	The inner liner assembly is part of the rack/liner structural unit which performs its safety function as a unit.	SC

Outer liner assembly	Provides collection area to detect inner liner leakage.	Structural failure under seismic loads. Liner leakage.	Possibility of exceeding criticality safety limit if failure of liner causes rack failure to protect containers from non-coverblock drops or seismic loads.	The outer liner assembly is part of the rack/liner structural unit which performs its safety function as a unit.	SC
Cover block catcher	Protect rack and liner assemblies from credible modified cover block drop impact.	Failure upon modified cover block drop impact.	Possibility of exceeding criticality safety limit if modified cover block drop crushes containers or causes loss of sludge contents.	Protects rack and liner assemblies from fall of modified cover blocks.	SC
Pool cooling system	Maintain pool water temperature within design limits	Failure to maintain pool temperature	Failure could result in gradual heat up of pool but have no effect on container or rack structural integrity. Failure could impact water purification systems.	Loss of pool cooling would not generate a hazard even over a long period of time. Failure would be detected during routine surveillance.	GS
Water purification IX and filtration system(s)	Maintain pool water purity for operator visibility and ALARA	Failure to purify water in pool Leakage external to pool	Failure of this component would have no effect on container or rack structural integrity.	The general service designation of the water purification system is based on a rack and container design/material selection such that water quality control would not impact container or rack structural integrity, even over the long term.	GS
Pool water addition system	Maintain pool water level for ALARA	Failure to add water or leakage external to pool.	Failure of this component would have no effect on the system safety function.	There is no credible means by which the containers could become uncovered. Failure of this system is an operational impact only.	GS
Liner leak detection system	Detect water outside of inner liner	Failure to detect leak	Failure of this component would have no effect on the system safety function.	There is no credible means by which the containers could become uncovered. Liner leak detection is only an aid to operational control and is not needed to initiate operator or emergency response actions to prevent consequences from exceeding REGs.	GS
Leakage removal system	Remove water from between the liners	Failure to remove water	Failure of this component would have no effect on the system safety function.	Water between the liners could indicate inner liner leakage. However this is not a safety issue and failure of the leakage removal system only impacts recover from this operational concern.	GS

Service platforms and treatment skid	Provide supporting platforms for pool cooling and purification systems	Structural failure	Failure of this component would have no effect on the system safety function.	The rack assembly is designed to protect the containers from heavy object impacts such as those that might be caused by failure of the service platforms or treatment skids.	GS

Table 1: PRELIMINARY T PLANT SLUDGE STORAGE SAFETY EQUIPMENT LIST

SSC	MITIGATED ACCIDENTS	SAFETY FUNCTIONS	FUNCTIONAL REQUIREMENTS	PERFORMANCE CRITERIA	COMMENTS
Type 1 Sludge Storage System	None	None	The Type 1 container maintains sludge in stored condition	The Type 1 container must fit the Type 1 rack and remain leak-tight for the design life. Any internal pressure must be vented.	
COMPONENT IDENTIFICATION	COMPONENT FUNCTION	COMPONENT FAILURE MODES	EFFECT OF FAILURE ON SSC SAFETY FUNCTION	COMPONENT SAFETY CLASSIFICATION JUSTIFICATION	COMPONENT SAFETY CLASSIFICATION
Container	Hold sludge in stored condition with no leakage	Leakage of all or part of contents.	There currently is no safety function for this component	Container failure accident consequences fall far below REGs. It is anticipated that there will be no criticality concerns associated with the waste material to be stored in Type I containers.	GS
Container vent with filter	Vent container to cell while preventing significant release of particulates	Failure to filter vented particulates Plugging of filter	Failure could result in venting of radioactive particulates to cell and spread of contamination. Plugging of filter could lead to container overpressure condition. No worker safety issues since none of the potential storage locations are manned. There currently is no safety function for this component.	Container failure accident consequences fall far below REGs.	GS

Table 1: PRELIMINARY T PLANT SLUDGE STORAGE SAFETY EQUIPMENT LIST

SSC	MITIGATED ACCIDENTS	SAFETY FUNCTIONS	FUNCTIONAL REQUIREMENTS	PERFORMANCE CRITERIA	COMMENTS
Type 2 Sludge Storage System	None	Retain sludge within container.	The Type 2 container maintains sludge in stored condition	The Type 2 container must fit the Type 2 rack and remain leak-tight for the design life. Any internal pressure must be vented.	Type 2 containers will be protected from heavy object drops
COMPONENT IDENTIFICATION	COMPONENT FUNCTION	COMPONENT FAILURE MODES	EFFECT OF FAILURE ON SSC SAFETY FUNCTION	COMPONENT SAFETY CLASSIFICATION JUSTIFICATION	COMPONENT SAFETY CLASSIFICATION
Container	Hold sludge in stored condition with no leakage	Leakage of all or part of contents.	Failure could result in leakage of sludge material into pool water. Failed container would be removed from the pool and placed in overpack.	Release of sludge to the pool water does not result in an unacceptable hazard to either the facility worker or public. It is also anticipated that a single container rupture would not be a criticality concern. One-inch wall thickness is currently credited in criticality analysis for transportation to limit k_{eff}.	GS
One-way pressure relief device	Vent container to pool when pressure exceeds vent trap pressure	Failure to vent	Failure to vent could lead to container overpressure condition due to gas buildup and sudden release of sludge material into the pool.	The release of unfiltered contaminants to the pool water does not result in an unacceptable hazard to either the facility worker or public. In the event that over pressurization did occur, the pool water would become contaminated but would not result in a significant release of hazardous material to manned areas or the environment. It is also anticipated that a single container rupture would not be a criticality concern.	GS

Table 1: PRELIMINARY T PLANT SLUDGE STORAGE SAFETY EQUIPMENT LIST

SSC	MITIGATED ACCIDENTS	SAFETY FUNCTIONS	FUNCTIONAL REQUIREMENTS	PERFORMANCE CRITERIA	COMMENTS
Container overpack	Not covered in hazards analysis.	None anticipated.	TBD	TBD	
COMPONENT IDENTIFICATION	COMPONENT FUNCTION	COMPONENT FAILURE MODES	EFFECT OF FAILURE ON SSC SAFETY FUNCTION	COMPONENT SAFETY CLASSIFICATION JUSTIFICATION	COMPONENT SAFETY CLASSIFICATION
Container overpack (Type I or II)	Contain leakage from leaking container.	Overpack leaks	There currently is no safety function for this component	Anticipated that criticality will not be a concern for up to and including 2 overpacks containing a Type II container in a Type I storage configuration. Only 2 overpack storage locations are provided in each dry cell. It is also anticipated that sludge stored in an overpack configuration will not be reactive.	GS

Table 1: PRELIMINARY T PLANT SLUDGE STORAGE SAFETY EQUIPMENT LIST

SSC	MITIGATED ACCIDENTS	SAFETY FUNCTIONS	FUNCTIONAL REQUIREMENTS	PERFORMANCE CRITERIA	COMMENTS
Canyon exhaust system	None	None	Maintain minimum ventilation through sludge storage cells.	Maintain H_2 concentration in cells less than LFL.	H_2 buildup in cell to 1% would take at least 10 days.
COMPONENT IDENTIFICATION	COMPONENT FUNCTION	COMPONENT FAILURE MODES	EFFECT OF FAILURE ON SSC SAFETY FUNCTION	COMPONENT SAFETY CLASSIFICATION JUSTIFICATION	COMPONENT SAFETY CLASSIFICATION
Canyon exhaust system	Maintain minimum ventilation rate through sludge storage cells.	Loss of ventilation flow through sludge storage cells	Long term failure could result in gradual build up of H_2 in cell.	Ample recovery time is available with respect to potential hydrogen build-up. Ventilation system failure would be immediately detected and alarms activated due to the loss of confinement function in other cells.	GS
HEPA filter	Minimize spread of contamination to the environment.	Uncontrolled release of particulate contaminants to the environment.	There currently is no safety function for this component.	A cold container rupture event does not require HEPA filtration in order to satisfy risk evaluation guidelines. The drop of either a container or a cover block on several containers does not require HEPA filtration in order to satisfy risk evaluation guidelines.	GS
Stack CAM (alpha gamma)	Alarms locally and in operating gallery Rm 218	Spurious alarm or fail to alarm	There currently is no safety function for this component	No credit is taken for a stack CAM in the safety analysis.	GS

Table 1: PRELIMINARY T PLANT SLUDGE STORAGE SAFETY EQUIPMENT LIST

SSC	MITIGATED ACCIDENTS	SAFETY FUNCTIONS	FUNCTIONAL REQUIREMENTS	PERFORMANCE CRITERIA	COMMENTS
Crane system	None	None	Transfer containers from transporter to storage locations. Lift containers for periodic weight checks. Move pool and cell cover blocks as required.	Be able to remotely lift sludge containers and cell cover blocks. No personnel will be present in canyon during lifts other than the shielded crane operator.	
COMPONENT IDENTIFICATION	COMPONENT FUNCTION	COMPONENT FAILURE MODES	EFFECT OF FAILURE ON SSC SAFETY FUNCTION	COMPONENT SAFETY CLASSIFICATION JUSTIFICATION	COMPONENT SAFETY CLASSIFICATION
Crane, load cell and associated rigging	Lift sludge containers and cell cover blocks.	Failure to operate Load becomes stuck during lift Crane drops load	Failure could result in dropped container or cover block. There currently is no safety function for this component as cover block catchers and racks are designed to withstand these impacts.	Consequences of container and cover block drop accidents are far below REGs. Criticality protection in pool cell is maintained by the rack and cover block catcher. Failure would be immediately detected by crane operator.	GS

Table 1: PRELIMINARY T PLANT SLUDGE STORAGE SAFETY EQUIPMENT LIST

SSC	MITIGATED ACCIDENTS	SAFETY FUNCTIONS	FUNCTIONAL REQUIREMENTS	PERFORMANCE CRITERIA	COMMENTS
Pool Cell Covers	None	None	Cover top of sludge storage pool and protect containers from other load drops.	Pool cell cover blocks are specially designed and lighter than normal cover blocks used within T-Plant.	May become a TSR design feature.
COMPONENT IDENTIFICATION	COMPONENT FUNCTION	COMPONENT FAILURE MODES	EFFECT OF FAILURE ON SSC SAFETY FUNCTION	COMPONENT SAFETY CLASSIFICATION JUSTIFICATION	COMPONENT SAFETY CLASSIFICATION
Modified concrete pool cover blocks	Cover pool as required	Structural failure allowing all or part of cover block to fall into pool cell.	Failure would be mitigated by cover block catcher. There currently is no safety function for this component.	Failure of a pool cover block results in no consequences that challenge REGs because cover block catchers will be designed to withstand a pool cell cover block drop.	GS but will be designed to PC3 standards.
Metal grating pool covers	Protect pool from small falling objects while permitting visual inspection of pool contents	Structural failure allowing all or part of grating to fall into pool cell.	Failure would be mitigated by container rack, which is designed to protect containers from falling objects. There currently is no safety function for this component.	Failure of grating results in no consequences that challenge the REGs.	GS but will be designed to PC3 standards.

Table 1: PRELIMINARY T PLANT SLUDGE STORAGE SAFETY EQUIPMENT LIST

SSC	MITIGATED ACCIDENTS	SAFETY FUNCTIONS	FUNCTIONAL REQUIREMENTS	PERFORMANCE CRITERIA	COMMENTS
Helium purge system	None	None	Purge transport cask during receipt process	Be connectable to transport cask and be able to purge the gas space within the transport cask.	Industrial safety consideration only.
COMPONENT IDENTIFICATION	COMPONENT FUNCTION	COMPONENT FAILURE MODES	EFFECT OF FAILURE ON SSC SAFETY FUNCTION	COMPONENT SAFETY CLASSIFICATION JUSTIFICATION	COMPONENT SAFETY CLASSIFICATION
Helium purge system	Used to purge transport cask during receipt at T Plant.	Failure to operate	Failure could result in process hold-up. There currently is no safety function for this component.	Failure of the helium purge system results in no hazards.	GS

Table 1: PRELIMINARY T PLANT SLUDGE STORAGE SAFETY EQUIPMENT LIST

SSC	MITIGATED ACCIDENTS	SAFETY FUNCTIONS	FUNCTIONAL REQUIREMENTS	PERFORMANCE CRITERIA	COMMENTS
Sludge container water addition system	None	None	Add water to Type 1 sludge storage containers	Be connectable to sludge storage containers and be able to add water to the sludge container while avoiding any spread of particulate contamination.	Applicable to Type 1 (dry storage) containers only.
COMPONENT IDENTIFICATION	COMPONENT FUNCTION	COMPONENT FAILURE MODES	EFFECT OF FAILURE ON SSC SAFETY FUNCTION	COMPONENT SAFETY CLASSIFICATION JUSTIFICATION	COMPONENT SAFETY CLASSIFICATION
Sludge container water addition system	Used to add water to containers as necessary.	Failure to operate Release of contamination from inside the sludge container. Spillage of water in cell.	Failure could result in minor localized contamination spread. There currently is no safety function for this component.	There are no criticality or hazardous release concerns associated with failure of this system.	GS

Table 1: PRELIMINARY T PLANT SLUDGE STORAGE SAFETY EQUIPMENT LIST

SSC	MITIGATED ACCIDENTS	SAFETY FUNCTIONS	FUNCTIONAL REQUIREMENTS	PERFORMANCE CRITERIA	COMMENTS
Video camera system	None	None	Provide remote viewing of sludge storage operations and surveillance during storage.	Be able to remotely observe operations in the canyon related to sludge storage operations. Provide the means to remotely observe off-normal events in sludge storage areas.	
COMPONENT IDENTIFICATION	COMPONENT FUNCTION	COMPONENT FAILURE MODES	EFFECT OF FAILURE ON SSC SAFETY FUNCTION	COMPONENT SAFETY CLASSIFICATION JUSTIFICATION	COMPONENT SAFETY CLASSIFICATION
Video camera system	Provide remote viewing of sludge storage operations and surveillance of storage arrays.	Loss of function Loss of ability to remotely view individual areas under surveillance.	Failure could result in inability to detect equipment failure or off-normal events in sludge storage areas. There currently is no safety function for this component.	Failure of the video camera system would impact operations but present no criticality or hazardous material release concerns.	GS

Table 1: PRELIMINARY T PLANT SLUDGE STORAGE SAFETY EQUIPMENT LIST

SSC	MITIGATED ACCIDENTS	SAFETY FUNCTIONS	FUNCTIONAL REQUIREMENTS	PERFORMANCE CRITERIA	COMMENTS
Fire safety system in the 221T canyon	None	None	Provides fire detection and alarm capability	Be able to detect a fire and initiate alarms to enable personnel to take corrective action. Designed to work in conjunction with combustible material loading.	
COMPONENT IDENTIFICATION	COMPONENT FUNCTION	COMPONENT FAILURE MODES	EFFECT OF FAILURE ON SSC SAFETY FUNCTION	COMPONENT SAFETY CLASSIFICATION JUSTIFICATION	COMPONENT SAFETY CLASSIFICATION
Fire detectors, alarms and pull stations 221-T fire system upgrades and fire standpipes	Provide detection and notification of a fire in the 221-T canyon Aid fire suppression efforts	Failure to detect fire Failure to alarm on detection of fire Spurious alarm.	There currently is no safety function for this component.	Per the FHA a fire engulfing a container is not considered credible. Although a fire in the canyon could expose containers in the dry cell to heat drawn in via the ventilation system, it is not expected to be sufficient to put the containers at risk of overheating.	GS

APPENDIX H

BASELINE DESIGN CRITERIA

(Provided by Fluor Hanford)

HNF-6579

Baseline Design Criteria for the Sludge Handling System

Project A-13(b)

October 2000

Prepared by:

C A Petersen 10/17/00

C. A. Petersen, Design Authority
SNF Sludge Handling System

W. John Geuther 10/19/00

W. J. Geuther, Design Authority
Solid Waste Treatment Facility (T Plant)

Concurrence:

W W Rutherford 10/17/00

W. W. Rutherford, Manager
SNF Sludge Handling System

10/19/00

W. S. Ayers, Canyon Projects Manager
Solid Waste Treatment Facility (T Plant)

HNF-6579

Baseline Design Criteria for the Sludge Handling System Project A-13(b)

TABLE OF CONTENTS

1.0 INTRODUCTION 1-1

1.1. PURPOSE 1-1
1.2. BACKGROUND 1-1
1.3. SCOPE 1-4
1.4. SITE LOCATION 1-5
1.5. PROJECT DESIGN INTERFACES 1-6
1.5.1. Sludge Removal System 1-7
1.5.2. T Plant 1-7
1.5.3. SNF Operations 1-7
1.5.4. K Basins 1-7
1.6. DESIGN RESPONSIBILITIES 1-7

2.0 PROJECT CRITERIA 2-1

2.1. FUNCTIONAL REQUIREMENTS 2-1
2.2. PERFORMANCE REQUIREMENTS/ACCEPTANCE CRITERIA 2-1
2.2.1. System Capacity 2-1
2.2.2. System Availability 2-2
2.2.3. Residual Radioactivity 2-2
2.2.4. Design Life 2-2
2.2.5. Material Compatibility 2-3
2.2.6. Start Up, Control, and Shutdown 2-3
2.2.7. Off-Normal Conditions Recovery 2-3
2.2.8. Maintainability 2-3
2.2.9. Corrosion of Parts 2-3
2.2.10. Protective Coatings 2-4

3.0 CONTAINER AND TRANSPORT SYSTEM DESIGN CRITERIA 3-1

3.1. SLUDGE CONTAINER DESIGN CRITERIA 3-1
3.1.1. Container Materials 3-1
3.1.2. Coatings 3-2
3.1.3. Packaging Dimensions 3-2
3.1.4. Container Design and Fabrication 3-3
3.1.5. Gross Weight Restrictions 3-3
3.1.6. Venting 3-3
3.1.7. Lid and Closure Design 3-4
3.1.8. Container Lid Penetrations/Ports 3-4
3.1.9. Container Internal Design 3-4
3.1.10. Lifting Attachments 3-5
3.1.11. Retrieval of Container Contents 3-5
3.1.12. Containment 3-5
3.1.13. Shielding 3-5
3.1.14. Service Life and Maintainability 3-5
3.1.15. Container Labeling 3-5

3.1.16. Hydrogen Generation *3-7*
3.1.17. Criticality *3-7*
3.1.18. Remote Monitoring of Containers *3-7*
3.1.19. Remote Water Addition *3-7*
3.1.20. Container Overpacks *3-8*
3.1.21. System Interfaces *3-8*
3.2. TRANSPORT SYSTEM 3-8

4.0 PROCESS CRITERIA 4-1

4.1. PROCESS REQUIREMENTS 4-1
4.1.1. Container Fill and Transport *4-1*
4.1.2. Arrival at T Plant *4-1*
4.1.3. Container Unloading and Placement *4-4*
4.1.4. Transporter Exit from T Plant *4-4*
4.1.5. Interim Storage *4-4*
4.2. MECHANICAL PROCESS REQUIREMENTS 4-6
4.3. PIPING AND VESSELS REQUIREMENTS 4-6
4.4. INSTRUMENTATION AND CONTROLS 4-8
4.4.1. Functional Requirements *4-9*
4.4.2. Performance Requirements *4-10*

5.0 T PLANT FACILITY CRITERIA 5-1

5.1. ARCHITECTURAL AND CIVIL/STRUCTURAL 5-1
5.2. HEATING, VENTILATION, AND AIR CONDITIONING 5-1
5.3. UTILITIES 5-1
5.3.1. Water *5-2*
5.3.2. Electrical *5-2*
5.4. COMMUNICATIONS SYSTEMS 5-2
5.5. AUTOMATIC DATA PROCESSING 5-2
5.6. MAINTENANCE 5-2
5.7. FIRE PROTECTION 5-2

6.0 GENERAL REQUIREMENTS 6-1

6.1. SAFETY 6-1
6.1.1. Criticality *6-1*
6.1.2. Safety Analysis *6-1*
6.1.3. Radiological Control *6-4*
6.1.4. Shielding *6-5*
6.1.5. Industrial Safety *6-5*
6.1.6. Fire Prevantion *6-6*
6.1.7. Traffic Safety *6-6*
6.1.8. ALARA *6-6*
6.2. ENVIRONMENTAL PROTECTION 6-8
6.3. SAFEGUARDS AND SECURITY 6-9
6.3.1. Safeguards *6-9*
6.3.2. Security *6-11*
6.4. NATURAL FORCES CRITERIA 6-12

6.5. DESIGN FORMAT 6-12
6.6. QUALITY ASSURANCE 6-12
6.6.1. Quality Assurance Requirements 6-12
6.7. DECONTAMINATION AND DECOMMISSIONING 6-13
6.7.1. DOE Regulations 6-13
6.7.2. Miscellaneous Design Features 6-13
6.8. OPERATING PERSONNEL AND SERVICES 6-14
6.9. TESTING 6-14

7.0 STANDARDS AND REQUIREMENTS 7-1

7.1. FEDERAL AND STATE REGULATIONS 7-1
7.2. DOE ORDERS 7-2
7.3. HANFORD PLANS AND PROCEDURES 7-2
7.4. NATIONAL CONSENSUS STANDARDS 7-4

8.0 REFERENCE DRAWINGS 8-1

9.0 REFERENCES 9-1

LIST OF FIGURES

Figure 1-1. Spent Nuclear Fuel, Canisters, and Storage Racks in KE Basin 1-2
Figure 1-2. Sludge Handling Functions 1-4
Figure 3-1. SNF Project KE Basin Sludge Removal Level 1 Process Flow Diagram 4-2

LIST OF TABLES

Table 1-1. Nominal Sludge Properties 1-3
Table 1-2. Key Sludge Handling System Design Interfaces 1-6
Table 1-3. Design Responsibility Matrix 1-8
Table 7-1. Applicable Federal and State Regulations 7-1
Table 7-2. Applicable DOE Orders 7-2
Table 7-3. Hanford Procedural Requirements 7-2
Table 7-4. National Consensus Standards 7-4
Table 8-1. Baseline Drawings 8-1

ACRONYMS AND ABBREVIATIONS

ACI	American Concrete Institute
AISC	American Institute of Steel Construction
ALARA	As Low As Reasonably Achievable
ANSI	American National Standards Institute
ASCE	American Society of Civil Engineers
ASME	American Society of Mechanical Engineers
ASTM	American Society for Testing and Materials
ATP	Acceptance Test Procedure
AWWA	American Water Works Association
AWS	American Welding Society
BARCT	Best Available Radionuclide Control Technology
CCTV	Closed Circuit Television
CFR	Code of Federal Regulations
CSER	Criticality Safety Evaluation Report
D&D	Decontamination and Decommissioning
DOE	U. S. Department of Energy
EDE	Effective Dose Equivalent
EPA	Environmental Protection Agency
FDC	Functional Design Criteria
FH	Fluor Hanford
FRS	Fuel Retrieval System
HEPA	High-Efficiency Particulate Air (filter)
HVAC	Heating, Ventilating, and Air Conditioning
ICRP	International Commission on Radiological Protection
IEEE	Institute of Electrical and Electronics Engineers
IES	Illuminating Engineering Society
ISA	Instrument Society of America
IWTS	Integrated Water Treatment System
KE Basin	K East Basin
KW Basin	K West Basin
MCO	Multi-Canister Overpack
MRS	Manual Retrieval System
MSDS	Material Safety Data Sheet
NEC	National Electrical Code
NEMA	National Electric Manufacturing Association
OSHA	Occupational Safety and Health Administration / Act
OTP	Operability Test Procedure
PCB	Polychlorinated Biphenyl
PNL	Pacific Northwest National Laboratory
QA	Quality Assurance
RCRA	*Resource Conservation and Recovery Act*
S/RID	Standards/Requirements Identification Document
SAR	Safety Analysis Report
SNF	Spent Nuclear Fuel

TBD	To Be Determined
TPA	Tri-Party Agreement *(Hanford Federal Facility Agreement and Consent Order)*
TSCA	Toxic Substance Control Act
UL	Underwriters Laboratory
WHC	Westinghouse Hanford Company

DEFINITIONS

ALARA. ALARA means "As Low As Reasonably Achievable," which is the approach to radiation protection to manage and control exposures (both individual and collective) to the work force and to the general public to as low as is reasonable, taking into account social, technical, economic, practical, and public policy considerations. ALARA is not a dose limit, but a process that has the objective of attaining doses as far below the limit as is practical.

ALARA Principles. Those ideas used to minimize human and environmental exposure to hazardous substances and conditions.

Container Design Team. Contracted provider of sludge container design in support of the Sludge Handling Sub-Project.

Containment. Preventing the release of contamination.

Confinement. Total enclosure and isolation of radioactive material so that direct contact with radioactive material is avoided.

Contamination. Radioactive and/or other hazardous material in any place where it is not desired, particularly where its presence may be harmful.

Dangerous waste. Solid waste designated in WAC 173-303-070 through 100 as dangerous or extremely hazardous waste.

Decommissioning. To remove a nuclear facility from service and reduce residual radioactivity to levels which permit release of the property or facility for unrestricted use and termination of any applicable license(s).

Decontamination. Those activities employed to reduce the levels of (radioactive and/or other hazardous) contamination in or on structures, equipment, materials, and personnel.

Dose. The effective dose equivalent as defined in International Commission on Radiological Protection (ICRP) Report No. 26.

Dose equivalent. A term used to express the amount of effective radiation when modifying factors have been considered. The product of absorbed dose multiplied by a quality factor multiplied by a distribution factor. It is expressed numerically in rem.

Exposure. The condition of being subjected to radiation, radioactive materials, or other hazardous substances.

Facility Design Team. Contracted provider of A-E Services for the conceptual design of T Plant upgrades and systems in support of the Sludge Handling Sub-Project.

Fail-safe. Pertaining to a system or component that automatically places itself in a safe operating mode in the event of failure.

FH Project Team. Sludge Handling System project personnel working within the Fluor Hanford SNF and WM projects.

Hazardous waste. Those wastes designated as hazardous by U.S. Environmental Protection Agency regulations (40 CFR 261).

Maintainability. The capability of a component or system to facilitate maintenance, repair, etc.

May. For the purpose of this document, use of the word "may" indicates an option.

mrem. A unit of measure of radiation dose equivalent (a thousandth of a rem).

Normal. The system is operating as designed within established safety basis.

Off-normal. The system is not operating as designed nor within established safety basis.

Operations. All aspects of plant or facility operations (i.e., engineering maintenance, safety, process operations).

Reliability. A measure of the ability of a component or system to function as intended without failure over a specified time period (e.g., lifetime).

Safe Operations. Operations that are in compliance with established project, facility, and operational safety requirements (i.e., Safety Analysis Report, Operational Safety Restrictions, etc.).

Shall. This term reflects mandatory requirements.

Should. This term reflects highly desirable features. Justification for not meeting such requirements shall be approved by the Sludge Handling System Design Authority.

Sludge. Any material that is less than or equal to 0.64 cm (0.25 inch) in diameter and is removed from the basin as bulk waste.

Verification. The process of evaluating a system or component to determine whether the products of a given development phase satisfy the conditions imposed at the start of that phase.

Will. This term reflects a statement of fact.

1.0 INTRODUCTION

This *Baseline Design Criteria for the K Basins Sludge Handling System* establishes the design requirements for subproject A-13(b), Sludge Handling System, of the Spent Nuclear Fuels (SNF) Transition Project. This criteria document is a sub-tier document to SNF-4961, *Functions and Requirements for the Transition Project*, and complies with all applicable requirements included in that document (Yanochko, 1999).

1.1. PURPOSE

This Baseline Design Criteria Document establishes the design requirements to be used for the design of the systems required for the transfer of K Basins sludge to T Plant, including the sludge containers, and for the receipt and storage of the sludge at T Plant. This Baseline Criteria Document also identifies the design interface requirements for the sludge handling process. Revisions to this document may be made at the end of conceptual design to provide the definitive design requirements.

1.2. BACKGROUND

The KE and KW Basins, built in the early 1950's, have been used to store N Reactor spent nuclear fuel (SNF) underwater starting in 1975 for KE, 1981 for KW, and much earlier for Single Pass Reactor SNF. In 1992, the decision to deactivate the PUREX Plant left approximately 2,100 metric tons of SNF in the K Basins with no means for near term processing. A significant fraction of the SNF in the K Basins has become degraded due to cladding breaches during reactor discharge, and corrosion has continued during underwater storage.

The fuel in the KE Basin is stored in open top canisters, some have closed bottoms and others have screened bottoms (See Figure 1-1). The open canisters release soluble fission products into the basin water and also allow fuel corrosion products to combine with canister rack rust, concrete dust and environmental particulate matter, which settles to the basin bottom as a fine sludge. Depths exceeding three feet have been measured in the Weasel Pit. The basin water and sludge may leak to the environment due to the age and condition of the basin. This potential hazard provides the impetus for removing the sludge from the basins as soon as possible. For the purposes of differentiating SNF from sludge, any material less than or equal to 0.64 cm (0.25 inch) in diameter is defined as sludge and will be dispositioned as remote-handled (RH) transuranic (TRU) waste.

The closed stainless steel canisters used at the KW Basin contain corroded fuel. Some leakage has released soluble fission products to the basin water but at much lower rates than at KE Basin.

Figure 1-1. Spent Nuclear Fuel, Canisters, and Storage Racks in KE Basin.

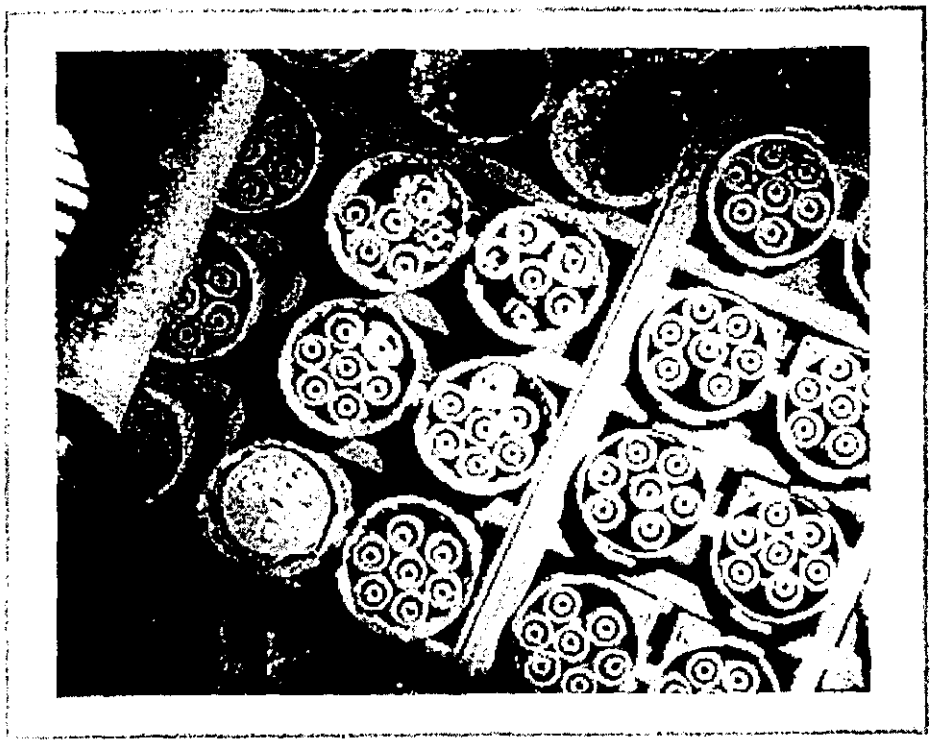

Sludge will be retrieved from the K Basins and managed as two separate waste streams (WHC, 1995a, DOE-RL, 1995a). One sludge stream will be comprised of canister and fuel wash sludge that collects in the knockout pots and settler tanks during SNF retrieval and processing. The canister and fuel wash sludge is expected to include a significant number of metallic uranium fuel fragments, which react with water generating heat and hydrogen, and fuel corrosion products. The estimated nominal volume of the canister and fuel wash sludge is about 3 m^3. The second sludge stream will be comprised of the floor and pit sludge. This sludge consists of less reactive components: windblown sand and rocks, spalled concrete from the basin walls, iron and aluminum corrosion products, ion exchange resin beads, uranium oxides, and possibly some uranium fuel particles. The estimated nominal volume of the floor and pit sludge is about 47 m^3.

Table 1-1 provides an overview of the nominal properties of the sludge waste streams from the K-East (KE) and K-West (KW) Basins. The data presented in this table are based on the sludge database (Pearce and Klimper, 2000) and should be considered as information only as the database is considered the inventory of record. The canister and fuel wash sludge stream is a composite of the KE2, KE3, KW2, and KW3 streams, and floor and pit sludge stream is a composite of the KE1 and KW1 streams. In addition to the compilation of sludge data, observations of sludge behavior during sampling and analysis as it pertains to sludge container design and storage has been documented (Baker, 2000).

Table 1-1. Nominal Sludge Properties

	KE1	KE2	KE3	KW1	KW2	KW3
Volume	42.6 m^3	0.3 m^3	0.9 m^3	4.7 m^3	0.2 m^3	2 m^3
Total Pu	8 kg	3.1 kg	3.6 kg	0.2 kg	3 kg	6 kg
Pu Concentration	0.19 kg/m^3	0.1 kg/m^3	4 kg/m^3	0.05 kg/m^3	15 kg/m^3	3 kg/m^3
$^{239}Pu/Pu$	85.3 wt %	84.2 wt %	83.9 wt %	85.2 wt %	83.7 wt %	85.8 wt %
Total U	3520 kg	1580 kg	1440 kg	86.2 kg	1460 kg	2440 kg
U Metal	119 kg*	1470 kg*	15 kg*	0.9 kg**	1460 kg**	67 kg**
$^{235}U/U$ Total	0.67 wt %	0.71 wt %	0.74 wt %	0.70 wt %	0.78 wt %	0.75 wt %
Organic Ion Exchange Resins	Yes	Some	Some	No (?)	No	No
PCBs	Yes	Trace	Trace	No (?)	No	Trace
Hydrogen Gas Generation	No (?)	Yes	Yes	No (?)	Yes	Yes
Dose Rate	Moderate	High	High	Low	High	High

* Fuel Enrichment is 0.95
** Fuel Enrichment is 1.25

Upon exiting the K Basins, it is assumed that all sludge streams will be managed under the *Resource Conservation and Recovery Act* (RCRA) as remote-handled mixed transuranic (RH-TRUM) waste. The sludge will be transported to T Plant for interim storage. For the most part, the floor and pit sludge will be stored in vented Type 1 containers in empty process cells and the canister and fuel wash sludge will be stored in vented Type 2 containers underwater in the T Plant PWR fuel pool. The K Basins sludge will be regulated as a polychlorinated biphenyl (PCB) remediation waste under the *Toxic Substances Control Act* (TSCA). The sludge may also be regulated as a mixed waste under *Washington Administrative Code* (WAC) 173-303; however, this determination is still pending.

The sludge will remain in storage until integrated into the plans for treating and disposing of the RH-TRU waste located on the Hanford Site, in accordance with Tri-Party Agreement (TPA) milestone M-91. Final disposition of the sludge will be at the Waste Isolation Pilot Plant (WIPP) or another suitable location.

Description of the T Plant facility can be found in Appendix A.

1.3. SCOPE

The scope of this document is to provide the system design requirements for the packaging, shipment, receipt, and storage of the K Basins sludge. The Sludge Handling System shall:

- Remove the containerized sludge from the K Basins on a schedule currently specified in the Tri-Party Agreement (TPA) Milestones M-34-08 and M-34-10.
- Meet the TPA milestones associated with T Plant readiness to receive the containerized sludge (M-91-18, M-91-19-T01, M-91-20, M-91-21-T01, and M-91-22).
- Place the untreated sludge into interim storage at T Plant pending final treatment and disposal in accordance with TPA milestone M-91 for RH-TRU waste.

This Baseline Design Criteria Document is to be used for the design of all of the functions represented in the double-lined boxes in Figure 1-2 below.

Figure 1-2. Sludge Removal, Handling, and Storage Functions

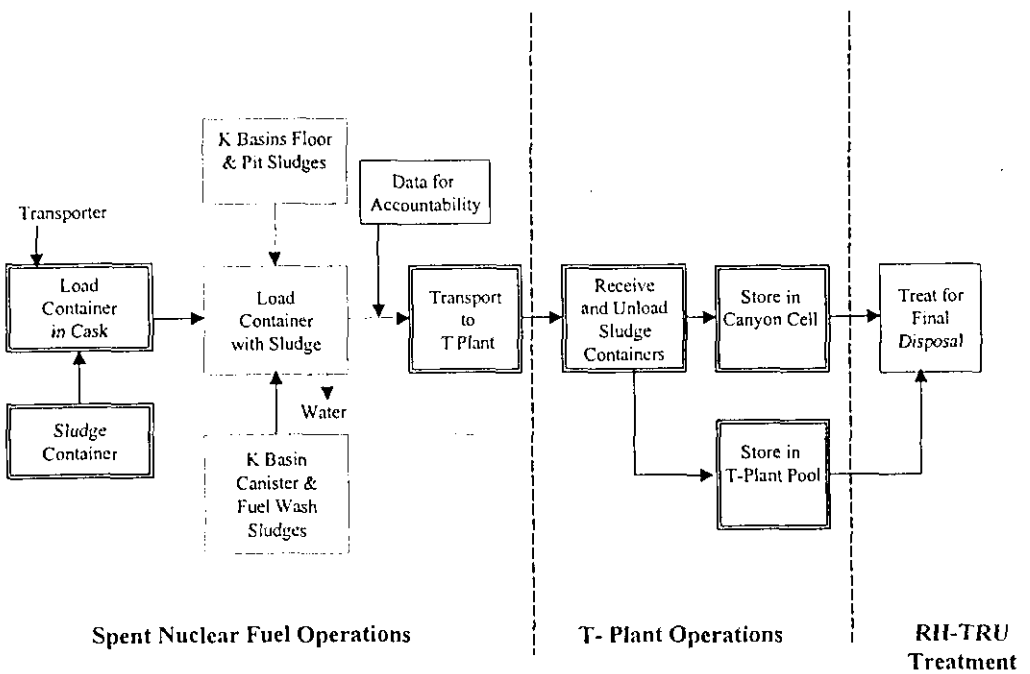

This document is intended to provide the baseline design requirements for:

- Sludge containers used for transport and interim storage of both floor and pit sludge (Type 1 containers) and the canister and fuel wash sludge (Type 2 containers). Container design shall consider clean out of the sludge and eventual disposal of the containers.

- Any supplemental equipment or facility modifications required for the loading of the shipping cask onto the transport vehicle.

- Equipment and facility modifications required for the transport of the shipping cask to T Plant.

- Equipment and facility modifications required for unloading the sludge containers from the shipping cask and placement in the T Plant storage facility.

- Equipment and facility modifications required for storage of the sludge containers at T Plant.

1.4. SITE LOCATION

The locations where key activities are to be performed by the Sludge Handling System are listed below. Providing the equipment and systems to transfer the sludge into the empty container and prepare the container and cask for shipment to T Plant is the responsibility of the Sludge Removal Subproject, Project A-13(a), and will occur in the KE and KW Basins at a location to be determined by that project.

- Empty sludge containers will be loaded into the transport cask, which has been previously loaded onto the transporter. Specific locations for the storage, staging, and loading of empty sludge containers into the cask are TBD.

- The cask cavity is required to be partially filled with water for the transport of sludge containers, this operation will occur at a location TBD.

- Unloading of the sludge container from the transport cask, including purging of the transport cask with helium prior to unloading, will occur in the T Plant tunnel.

- Storage of the Type 1 sludge containers will occur at T Plant in empty process cells TBD. Final determination of the storage location will occur during the design process.

- Storage of the Type 2 sludge containers will occur underwater at T Plant in the current PWR pool.

All locations to be determined during the design process shall minimize interference with other projects and operations both at the K Basins and at T Plant.

1.5. PROJECT DESIGN INTERFACES

Table 1-2 identifies the primary design interfaces associated with the Sludge Handling System.

Table 1-2. Key Sludge Handling System Design Interfaces

Interface Control Number	Design Interface	From	To	Interface Location
IC-XXX	MCO casks (2) for transport of sludge container	SNF Operations	Sludge Handling System	N/A
IC-YYY	Area/equipment for storage, staging, and loading of empty containers into transport cask	TBD	Sludge Handling System	TBD
IC-226	Loading of empty sludge container into transport cask	Sludge Handling System	Sludge Removal System	KE and KW Basins
IC-226	Verification sludge container meets waste acceptance criteria	Sludge Handling System	Sludge Removal System	N/A
IC-226	Load transport cask and ship to T Plant	Sludge Removal System	Sludge Handling System	KE and KW Basins
IC-ZZZ	Helium purge system for transport cask (including exhaust system)	T Plant (Shippingport Fuel Removal)	Sludge Handling System	T Plant Tunnel
IC-ZZZ	Grapple/lifting equipment to remove cask lid	T Plant (Shippingport Fuel Removal)	Sludge Handling System	T Plant Crane
IC-ZZZ	Grapple/lifting equipment to remove sludge containers from cask	T Plant (Shippingport Fuel Removal)	Sludge Handling	T Plant Crane
IC-ZZZ	Existing pool water addition and conditioning system	T Plant Operations	Sludge Handling	T Plant Pool
IC-ZZZ	Canyon deck and process cells readiness for sludge receipt and storage	T Plant Operations (Deck Clean-off Project)	Sludge Handling	T Plant

The primary design interface for the Sludge Handling System within the SNF Project is the Sludge Removal System. In addition, the Sludge Handling System will interface with other projects performing activities in the 100 K area and T Plant (especially, the Shippingport Fuel Removal and Deck Clean-off projects).

1.5.1. Sludge Removal System

Interfaces between the design of the Sludge Removal System, Project A-13(a), and the Sludge Handling System, Project A-13(b), are delineated in interface control scope sheet IC-226. This document specifically addresses assigned responsibilities for the design of the transporter and sludge containers as well as for potential sampling that may be required to meet sludge characterization requirements.

1.5.2. T Plant

Known design interfaces, especially those with the Shippingport Fuel Removal and the Deck Clean-Off projects, are specified as baseline design criteria. These interfaces will be further defined as the design process evolves.

1.5.3. SNF Operations

The sludge containers will be transported and designed to utilize the Multi-Canister Overpack (MCO) Transport Cask, which is under the jurisdiction of the SNF Operations organization.

1.5.4. K Basins

The Sludge Handling System may occupy areas as needed in the 100 K Area. Other design interfaces with K Basins may exist with regard to warehouse facilities, power needs, shop services, and utility services. These interfaces shall be documented during the design process and controlled as specified above for the SNF Project.

1.6. DESIGN RESPONSIBILITIES

Conceptual design activities for the Sludge Handling System will be performed using two teams. One team will focus on the design of the container and associated equipment, and the second team will be responsible for design of the upgrades and modification needed to support sludge receipt and storage at T Plant. Table 1-3 provides an overview of the responsibilities for the conceptual design and supporting documentation for the Sludge Handling System. Cost and

schedule estimates for the conceptual design document shall include, but not be limited to, the activities listed in both columns one and two of Table 1-3.

Table 1-3. Design Responsibility Matrix

Design Item or Deliverable	Facility Designer	Container Designer	Provided by Others	Existing
Container Design		X		
Tamper Indicating Devices		X		
Grapple and Hooks		X		
Water Addition		X		
Container Connection Details		X		
Container Water Level Detection		X		
T Plant Modifications	X			
Regulatory Upgrades (liners, etc.)	X			
Seismic Upgrades	X			
Pool Modifications	X			
Cell Leak Detection	X			
Pool/Container Leak Detection	X			
Rack Design for Cell and Pool	X			
Water Quality Modifications	X			
Fire Protection Modifications	X			
Pool Cover Block Design	X			
Helium Vent System Modifications	X			
Radiation Monitoring & Detection	X			
ALARA Plan	X			
Container Overpacks		X		
Hanford Plant Forces Work Review			X	
Container Loading Equipment			X	
Off-Normal Contingency Design	X			
Transport System				X
Safety Analysis Report for Packaging (SARP)			X	
Safety Equipment List	X			
Safety/Hazard Impacts	X			
Preliminary Safety Evaluation (PSE)	X			
Draft Chapter 3 Safety			X	

Table 1-3. Design Responsibility Matrix

Design Item or Deliverable	Facility Designer	Container Designer	Provided by Others	Existing
Evaluation				
Preliminary Hazards Analysis				X
Preliminary Criticality Report				X
T Plant Seismic Evaluation				X
QA Project Plan	X			
Trade-off Studies	TBD			
Design Requirements/ Conceptual Design Crosswalk	X			
Work Plan	X			
Detailed Cost Estimate	X			
Other Project Cost Estimate			X	
Estimated Cost for Container Procurement		X		
Detailed Schedule	X			
Consolidated CDD	X			
Shippingport Fuel Removal			X	
Pool Water Removal			X	
Helium Purge/Vent System			X	
Equipment Removal from Cells			X	
Plan for Equipment that Will Be Retained or Modified for Use by SHS Project	X			

2.0 PROJECT CRITERIA

The Sludge Handling System, SNF project A-13(b), shall provide systems to safely transport and store K Basins sludge as RH-TRU waste pending eventual treatment. This section documents the functional and performance baseline requirements for the Sludge Handling System.

2.1. FUNCTIONAL REQUIREMENTS

The Sludge Handling System shall:

- Provide the Type 1 containers to hold the floor and pit sludge during transport and interim storage in a process cell at T Plant.
- Provide the Type 2 containers to hold the fuel wash and canister sludge during transport and interim storage in the T Plant pool.
- Accommodate the planned removal of the sludge from the sludge containers for future treatment and disposal as well as clean out and disposal of empty sludge containers.
- Provide any necessary supplemental equipment for the MCO cask to allow for the loading and transport of the sludge containers.
- Provide and/or modify the equipment necessary for transport, receipt, and storage of filled K Basin sludge containers.
- Provide the upgrades and modifications to the T Plant facility to allow the interim storage of sludge.

2.2. PERFORMANCE REQUIREMENTS/ACCEPTANCE CRITERIA

The Sludge Handling System shall be capable of containing, transporting, receiving, and storing K Basin sludge pending its eventual treatment and disposal as part of the RH-TRU Treatment Project (M-91 Project). The M-91 Project, which is a separate project, will provide for the treatment of all RH-TRU waste at Hanford and its eventual disposal at the Waste Isolation Pilot Plant or other suitable location.

2.2.1. System Capacity.

The Sludge Handling System shall be capable of transferring a total of 62 m^3 of floor and pit sludge and 7 m^3 of fuel wash and canister sludge to T Plant for interim storage (bounding values from Pearce and Klimper, 2000). This assumes a sludge removal campaign duration of 24

months, 5 work days per week, one 8-hour shift per day, and a 30% down time included for maintenance and facility outages.

The Sludge Handling System shall be capable of transferring sludge containers to T Plant at a rate of one shipment per day. A shipment shall consist of one MCO shipping cask fully loaded with one sludge container. T Plant shall be capable of receiving and transferring sludge containers to a storage location at the same rate. Type 1 containers will be stored in empty process cells and Type 2 containers will be stored in the T Plant pool.

2.2.2. System Availability

The Sludge Handling System shall be available to transfer, receive, and store sludge at T Plant at least 70 percent of the time.

2.2.3. Residual Radioactivity

The design of the sludge storage system shall minimize the potential for collecting or retaining radioactive material outside the container. The design objective shall be to maintain exposure levels in areas of continuous occupational occupancy (2000 hr/year) below an average of 0.5 mrem (5 microsieverts) per hour and as far below this average as is reasonably achievable. The design objectives for exposure rates to a radiological worker in areas where occupancy differs from the above shall be as low as reasonably achievable (ALARA) and shall not exceed 20% of the applicable standards in 10 CFR 835.202.

Equipment in close contact with the Type 1 sludge containers shall be capable of normal operation in a radiation field of 5 Sv/hr (500 R/hr). Equipment in close contact with the Type 2 sludge containers shall be capable of normal operation in a radiation field of 30 Sv/hr (3000 R/hr).

2.2.4. Design Life

Any equipment intended to supplement the existing transport system must equal or exceed that of the existing transport system. The operational life of any equipment at the K Basins associated with the transport of sludge shall be five years. The operational design life of the storage system, including sludge containers and monitoring equipment, and required facility upgrades and modifications at T Plant shall be 30 years. Seals shall be designed to have the same design life as the equipment using the seal. Replaceable equipment shall have a design life generally not less than a year. All other system components provided by the Sludge Handling project shall be designed, to the maximum extent practicable, to provide a minimum two year maintenance-free service life. Existing systems at T Plant shall be maintained by the facility throughout the life of the sludge storage operation.

2.2.5. *Material Compatibility*

Equipment, components, and assemblies that may come into contact with sludge shall be compatible with the physical, chemical, and radionuclide properties of the sludge. Physical, chemical, and radionuclide properties of the sludge streams are documented in the sludge design basis feed description (Pearce and Klimper, 2000; see particularly Tables 3-2 and 3-3).

2.2.6. Start Up, Control, and Shutdown

The Sludge Handling System shall provide for a safe shutdown of the process in the event of off-normal occurrences.

2.2.7. Off-Normal Conditions Recovery

Failure modes of the Sludge Handling System shall be considered in the design of the system components and operation. Means for mitigating off-normal conditions shall be provided.

2.2.8. Maintainability

The Sludge Handling System components shall be designed to minimize maintenance or testing requirements. Components requiring maintenance shall be designed in accordance with ALARA principles.

The Sludge Handling System equipment shall be designed to use standard replacement parts to the extent possible. Any parts, materials or assemblies expected to degrade or wear during normal use or exposure shall be easily replaceable.

Components shall be permanently lubricated to the maximum extent possible. If lubrication is required, the equipment shall be designed to allow lubrication through the use of fittings and without requiring the disassembly of any parts other than the simple removal of protective caps or booting. Lubricants shall be non-regulated under WAC-173-303 and shall be subject to approval by the design authority.

Hydraulic systems shall use a TEAOH-water mixture unless otherwise approved by the Design Authority.

2.2.9. Corrosion of Parts

The materials used in the Sludge Handling System equipment shall be such that no significant (i.e., will not affect operations or safe use of components) chemical, galvanic, or other reaction shall occur between them. All materials shall be corrosion resistant in the environment in which they will be used (i.e., T Plant atmosphere of unconditioned outside air and a canyon temperature

range from 40°F to 90°F.) Corrosion resistance may be accomplished by surface coatings and treatments or materials selection. If corrosion resistant inside surface coatings or treatments are used, they must provide their intended function over the design life of the equipment.

2.2.10. Protective Coatings

Any components of the Sludge Handling System receiving protective coatings shall be identified on the drawings. The drawings shall show specifications or industry standards for preparation and application of the coatings. Selection of coatings shall take into consideration the environments to which the components or assemblies will be subjected. The protective coatings shall consider the local environment, decontamination and general cleaning processes. Coatings without chloride are preferred.

All coatings shall be applied per the methods recommended by the manufacturer unless otherwise authorized by the Design Authorities for the Sludge Handling System and T Plant. The Design Authorities shall approve coating selections.

3.0 CONTAINER AND TRANSPORT SYSTEM DESIGN CRITERIA

Per IC-226, SNF Sludge Handling project, A-13(b), will design and procure sludge storage containers and provide them to the SNF Sludge Removal Sub-Project, A-13(a). The containers are to be 100% compatible with the existing Multi-Canister Overpack (MCO) Shipping Cask and transport system design. This section defines the design criteria applicable to the sludge containers and transport system.

Two container types will be required. Both container types will contain approximately 50% sludge, 40% water, and 10% void space.

The first container, designated Type 1, will have a diameter of approximately 24 inches and, for the most part, will hold relatively benign sludge from basin floors and pits. Based on nominal sludge stream volumes, approximately 81 Type 1 containers will be needed. Type 1 containers will be held in dry storage.

The second, designated Type 2, will be approximately 10 inches in diameter and, for the most part, will be used for sludge from canisters and fuel washing that has a higher chemical and nuclear reactivity. Based on nominal sludge stream volumes, approximately 45 Type 2 containers will be needed. Type 2 containers will be stored underwater for temperature control.

Type 1 containers will need to have the capacity for remote water additions to prevent the sludge from drying out. Type 2 containers do not need this capability, as the cooling medium of the storage pool is expected to minimize evaporation of water that is initially loaded with the sludge.

Both container types need to be passively vented to prevent pressurization and allow the escape of hydrogen and other gasses that will be produced chemically and radiolytically during storage. For the Type 2 containers that are to be stored underwater, this passive venting must be carried out in such a way that ingress of water to the containers is precluded.

Containers shall meet T Plant storage requirements and shall satisfy requirements of the applicable Safety Analysis Report for Packaging (SARP), which is anticipated to be the MCO Cask SARP (Smith, 2000) with revisions as necessary to address the sludge containers.

3.1. SLUDGE CONTAINER DESIGN CRITERIA

Unless otherwise noted, the following criteria apply to both Type 1 and Type 2 sludge containers.

3.1.1. Container Materials

Container materials shall be chemically, physically, and radiologically compatible with sludge and any other chemicals they may come in contact with during the sludge handling and storage

processes. Containers and related hardware shall be fabricated of corrosion resistant alloys to withstand long-term exposure to sludge with characteristics given in Tables 3-2 and 3-3 of the design basis feed description document (Pearce and Klimper, 2000). Type 2 containers shall be designed for long-term submersion in storage pool water, although the sludge will be bounding as a corrosion environment since the storage pool water chemistry will be monitored and controlled.

Container materials, including any seals or gaskets, shall withstand long-term exposure to the radiation dose rates specified in Section 2.2.3.

Container materials and overall design shall minimize residual radioactivity after use to facilitate container disposal as low-level waste. Materials that can absorb radionuclides from the sludge shall be avoided, and all welds and seams shall be ground smooth to preclude cracks, crevices, and dead spaces where radionuclides could accumulate and become difficult to remove during container cleanout.

3.1.2. Coatings

Coatings shall not be used on the sludge containers. Coatings may loosen or peel, creating contamination traps and potentially increasing radioactive waste volumes at the time of container disposal. Further, protective coatings will not be needed as the containers are to be fabricated of corrosion resistant alloys.

3.1.3. Packaging Dimensions

Both container types shall be vertical cylinders and shall be stable when standing unsupported on a firm, level surface. They shall also accommodate storage in racks for stability and to maintain a controlled center-to-center distance as required by the *Preliminary Criticality Study for K Basin Sludge Containers at T Plant*, HNF-6435 (Erickson, 2000).

The wall thickness of both container types shall be based upon the greatest of:

- Container integrity requirements, based on safety analysis;
- Criticality safety requirements; or
- Shielding requirements for a high radiation storage area (< 500 R/hr at one meter) based on sludge radioactivity characteristics given in Pearce TBI.

To ensure compatibility with the MCO Cask, the overall height of both container types shall not exceed 160.5 inches (Smith 2000). This height shall include nozzles, vents, lifting attachments, or other protrusions from the top of the container.

Type 1 sludge containers shall be vertical cylinders, no larger than 24 inches outer diameter and length as stated above. Compatibility with the MCO Cask shall be maintained. The main body of Type 1 sludge containers shall be fabricated of corrosion resistant standard schedule pipe.

The main body of Type 2 sludge containers shall be a right cylinder, to be fabricated of standard 10-inch diameter corrosion resistant pipe of 1" wall thickness. In addition, two spacer cages shall be provided to keep Type 2 containers centered in the MCO Cask during shipping. The spacer shall in no way limit or preclude contact with water in the cask (required for heat transfer). The spacer cage shall be designed as an integral part of the transportation system to protect the container under accident conditions specified in the applicable SARP, which is anticipated to be the MCO Cask SARP (Smith 2000).

3.1.4. Container Design and Fabrication

Code requirements for the design and construction of the sludge containers shall be established as part of the conceptual design. Sludge containers shall be designed and constructed with full penetration closure and flange welds to meet those code requirements. Containers shall be designed for a pressure of TBD psig.

Container lifting bails or lugs, container lid, and lid attachment shall be designed for the maximum lifting force with a minimum static safety factor of 3.0 based on yield strength per the *Hanford Site Hoisting and Rigging Manual* (DOE-RL 2000).

3.1.5. Gross Weight Restrictions

The maximum loaded weight of containers of either type shall not exceed 10 short tons (9062 kg) due to T Plant crane limitations. The minimum weight of fully loaded containers shall be 1000 lb per site security requirements.

3.1.6. Venting

Type 1 containers shall be passively vented through sintered steel NucFil®[1] HEPA filters. The vent shall be large enough to mitigate pressure buildup without allowing excessive water loss by evaporation. The HEPA filters shall be remotely replaceable in case of filter plugging or other need for filter maintenance.

The Type 2 container vent design shall incorporate a one-way valve or other system that allows passive venting of gas while the containers are underwater, but precludes the possibility of water ingress through the HEPA filters and into the containers.

1 NucFil is a registered trademark of Nuclear Filter Technology, 741 Corporate Circle, Suite R, Golden, Colorado 80401 USA

3.1.7. Lid and Closure Design

The container lid design shall meet the container integrity requirements above.

Protective collars attached to both the bottom and top of the cylinder shall be provided for out-of-roundness control. Each container shall be checked with a prototype ring, simulated circle, or dimensionally correct cylinder to ensure cask insertion capability. The container designer shall determine container outside tolerances.

Tamper Indicating Devices (TIDs) shall be placed on each individual container shipped to T Plant or the containers shall be made inherently self-tamper indicating by welding the container lid or alternative technique. The TID must be applied immediately after filling and closing the container at K Basins. The use of an alternative technique will require DOE concurrence.

3.1.8. Container Lid Penetrations/Ports

Container lids shall have a minimum of two penetrations: one port for filling and one for exhaust during these evolutions. Provisions shall be provided for remote addition of water. Any of these ports or a dedicated port may be designed to serve as the container vent during storage. However, strong consideration shall be given to a lid penetration on Type 1 containers dedicated to venting so that the vent connection is not disturbed for water additions. Provisions to protect the filter from being blinded by any of the containers' contents shall be evaluated.

There shall be no valves on any container lid penetrations.

The container lid penetration/port connections shall have unique designs and/or sizes so that inadvertent cross-connection cannot occur.

Nozzle sizes shall be common for both Type 1 and Type 2 containers.

3.1.9. Container Internal Design

Internal design of both Type 1 and Type 2 containers shall allow for the remote removal of sludge contents, followed by remote flushing with water. The container designer should consider methods, such as dished heads and smooth interiors with no entrapments, that will allow limited container residue to remain in emptied containers.

Type 2 containers shall incorporate a diagonal bar or other passive feature to preclude large gas bubbles from forming and spanning the diameter of the container beneath a layer of solids, thereby causing a "pistoning" effect that could raise the container liquid level and lead to overflow.

3.1.10. Lifting Attachments

Containers shall be fitted with lifting attachments compatible with existing T Plant crane lifting fixtures (hooks, extension hooks and spreader bars) that allow normal handling and allow for recovery from non-vertical container positions. Lifting attachments shall be painted yellow for visibility.

Lifting extensions shall be designed and furnished with Type 2 containers so that these containers can be placed into and retrieved from underwater storage without wetting the T Plant crane hook.

3.1.11. Retrieval of Container Contents

The container design shall allow remote removal of the sludge contents, followed by remote water rinsing if needed, so that empty used containers can be disposed of as low-level waste.

3.1.12. Containment

Double containment is not required for the sludge container design, as containers will be shipped inside the MCO Cask and stored within T Plant. Therefore, the container design is required to provide single containment only.

3.1.13. Shielding

Container shielding shall meet criteria for high radiation area during storage (< 500 R/hr at one meter) based on the sludge radioactivity characteristics given in the design basis feed description document (Pearce and Klimper, 2000).

3.1.14. Service Life and Maintainability

The design service life of the containers shall be 30 years. Components such as HEPA vent filters that may require service or replacement during this period shall be designed for remote maintenance. Permanent, non-replaceable container hardware such as threads, bolt studs, and/or mating surfaces that interface with replaceable or serviceable components shall be designed to last for the 30-year service life based on a worst-case number of removal/installation or loosening/tightening cycles.

3.1.15. Container Labeling

Containers shall be labeled with a unique identifier in letters at least 1.5 inches high that are permanently affixed or engraved so as to be readable for the 30 year service life. The labels shall

be located for visibility by the overhead crane operator. Bar coding may be used for electronic accountability in addition to this labeling.

3.1.16. Hydrogen Generation

Hydrogen generation in the containers by radiolysis and chemical reaction shall be mitigated completely by the container venting design. No catalyst packs shall be used in the containers for hydrogen mitigation.

3.1.17. Criticality

The package design (containers plus MCO Cask) shall meet the following criteria per NRC 2000:

- The contents shall remain subcritical (k_{eff} less than 0.95, where 0.95 is the mean value plus two times the one standard deviation value [two standard deviations] with bias applied) for the packages during normal conditions of transfer, assuming the following:
  - The most reactive credible configuration is consistent with the chemical and physical form of the allowed packaged material.
  - Moderation by water to the most reactive credible extent.
  - Close reflection of the containment system by water on all sides of such greater reflection of the containment system as may additionally be provided by the surrounding material of the packaging.
- The package design shall also ensure that three packages stacked together in any arrangement with close full reflection on all sides of the stack by water will remain subcritical (as defined above).

3.1.18. Remote Monitoring of Containers

The container storage system design shall include provisions for the facility to monitor the water level in Type 1 containers during storage at T Plant.

3.1.19. Remote Water Addition

The Type 1 container design shall allow remote addition of water as needed maintain the sludge water level. The design shall include features to preclude container overfilling, and the system shall be configured to fail safe.

3.1.20. Container Overpacks

Overpacks shall be designed and provided to hold up to 5% of the total expected number of Type 1 and Type 2 containers in the event of container leakage during storage in T Plant. Overpacks shall be capable of holding either a Type 1 or Type 2 container. Container overpacks are not required to fit inside the MCO Cask, as they would not be needed until after the containers have been shipped to T Plant. The overpacks shall have a removable lid and provide containment and venting similar to the containers themselves.

3.1.21. System Interfaces

Containers shall be 100% compatible with MCO transport system hardware, the MCO Cask, the K Basin's sludge removal system and T Plant handling fixtures. The containers shall also be compatible with all hardware and connections designed for filling, storage, and contents retrieval.

3.2. TRANSPORT SYSTEM

The existing MCO Cask and related hardware shall be used as designed to transport the K Basin sludge containers. The criterion above for system interfaces shall ensure that the sludge containers are compatible with the MCO Cask and related equipment with no modifications to this hardware. The MCO Cask has been evaluated for movement of SNF in HNF-SD-TP-SARP-017 (Smith, 2000).

4.0 PROCESS CRITERIA

4.1. PROCESS REQUIREMENTS

The generalized process flow for Sludge Removal and Handling (SNF project A-13) is shown in Figure 4-1 (Drawing H-1-81167). The following sections provide the general design requirements for the Sludge Handling System, which is indicated as SHS in Figure 4-1.

4.1.1. Container Fill and Transport

Spent Nuclear Fuel Operations will fill the container provided by the Sludge Handling project. Prior to filling, an empty container shall be loaded into the transport cask at a location TBD. The container will be filled at K Basins with the container lid intact. Once transfer line connectors are removed, the transport cask will be closed, purged and pressurized with helium gas, and sealed. The transport vehicle and cask will be checked and released by radiological protection technicians prior to proceeding to T Plant for receipt and off-loading of the sludge.

- During transport, the void space in the cask cavity shall be filled with water. At a minimum, water in the cask will be at the same level as the sludge in the container.
- The cask will be under positive pressure, due to the addition of helium, when it leaves the K Basin. This pressure shall not exceed TBD.
- The shipping window shall not exceed TBD hours.

4.1.2. Arrival at T Plant

The sludge will arrive at T Plant from the K Basins via the transport vehicle (truck and trailer). Each shipment will consist of one transport cask, which will be inspected according to approved receipt procedures. Once inspection is completed and the documentation package accompanying the shipment is accepted, the railroad tunnel door is opened, and the transport vehicle will back into the T Plant tunnel. The truck will then be uncoupled from the trailer and will exit the tunnel but remain within the T Plant contamination area. The cask will be purged with helium prior to cask unloading operations. A radiation monitor in the helium purge system's exhaust line will be required to ensure that the sludge container has maintained its confinement during transport.

- Upon arrival at T Plant, the cask shall meet smearable contamination limits.
- Cask dose rates shall allow close physical inspection.
- The Sludge Handling System shall use the helium purge system provided for the Shippingport Fuel Removal Project to the extent possible. This system shall be capable of providing a helium volume equal to that of the void space inside the cask.
- The helium purge system provided by the Shippingport Fuel Removal Project shall be modified, as necessary, for purging of the MCO cask on arrival at T Plant. This shall include radiation detection via an exhaust line air monitor.

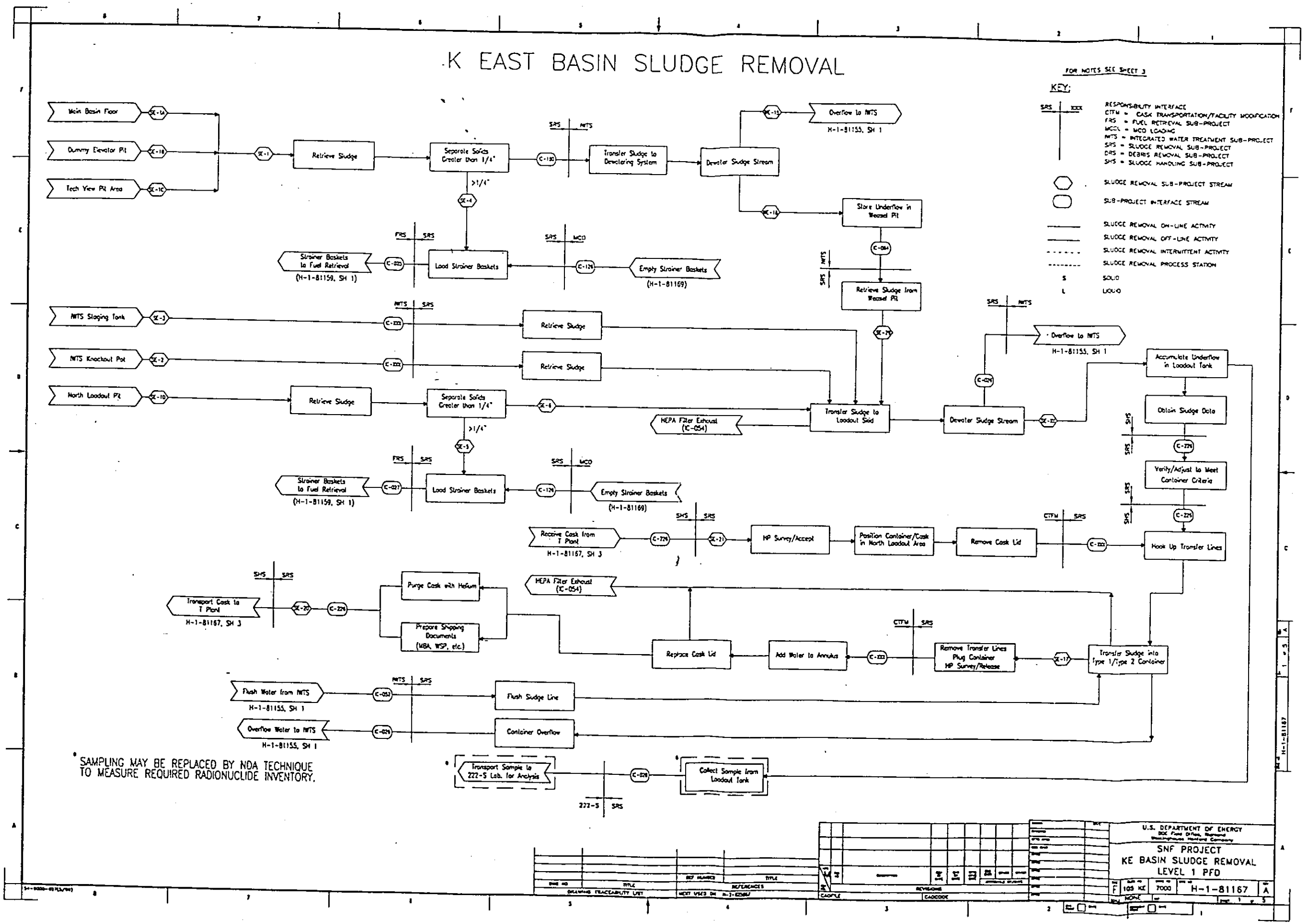
K EAST BASIN SLUDGE REMOVAL
FOR NOTES SEE SHEET 3
KEY:
RESPONSIBILITY INTERFACE
CTFM = CASK TRANSPORTATION/FACILITY MODIFICATION
FRS = FUEL RETRIEVAL SUB-PROJECT
WCOL = WCO LOADING
IWTS = INTEGRATED WATER TREATMENT SUB-PROJECT
SRS = SLUDGE REMOVAL SUB-PROJECT
DRS = DEBRIS REMOVAL SUB-PROJECT
SHS = SLUDGE HANDLING SUB-PROJECT
SLUDGE REMOVAL SUB-PROJECT STREAM
SUB-PROJECT INTERFACE STREAM
SLUDGE REMOVAL ON-LINE ACTIVITY
SLUDGE REMOVAL OFF-LINE ACTIVITY
SLUDGE REMOVAL INTERMITTENT ACTIVITY
SLUDGE REMOVAL PROCESS STATION
S SOLID
L LIQUID
Main Basin Floor
Dummy Elevator Pit
Tech View Pit Area
Retrieve Sludge
Separate Solids Greater than 1/4"
>1/4"
Transfer Sludge to Dewatering System
Dewater Sludge Stream
Overflow to IWTS
H-1-81155, SH 1
Store Underflow in Weasel Pit
Retrieve Sludge from Weasel Pit
Strainer Baskets to Fuel Retrieval
(H-1-81159, SH 1)
Load Strainer Baskets
Empty Strainer Baskets
(H-1-81169)
IWTS Staging Tank
IWTS Knockout Pot
North Loadout Pit
HEPA Filter Exhaust
(IC-054)
Transfer Sludge to Loadout Skid
Accumulate Underflow in Loadout Tank
Obtain Sludge Data
Verify/Adjust to Meet Container Criteria
Receive Cask from T Plant
H-1-81167, SH 3
HP Survey/Accept
Position Container/Cask in North Loadout Area
Remove Cask Lid
Hook Up Transfer Lines
Transport Cask to T Plant
Purge Cask with Helium
Prepare Shipping Documents
(MBA, WSP, etc.)
Replace Cask Lid
Add Water to Annulus
Remove Transfer Lines
Plug Container
HP Survey/Release
Transfer Sludge into Type 1/Type 2 Container
Flush Water from IWTS
Flush Sludge Line
Overflow Water to IWTS
Container Overflow
Transport Sample to 222-S Lab. for Analysis
Collect Sample from Loadout Tank
222-S
* SAMPLING MAY BE REPLACED BY NDA TECHNIQUE TO MEASURE REQUIRED RADIONUCLIDE INVENTORY.
U.S. DEPARTMENT OF ENERGY
SNF PROJECT
KE BASIN SLUDGE REMOVAL
LEVEL 1 PFD
H-1-81167
A

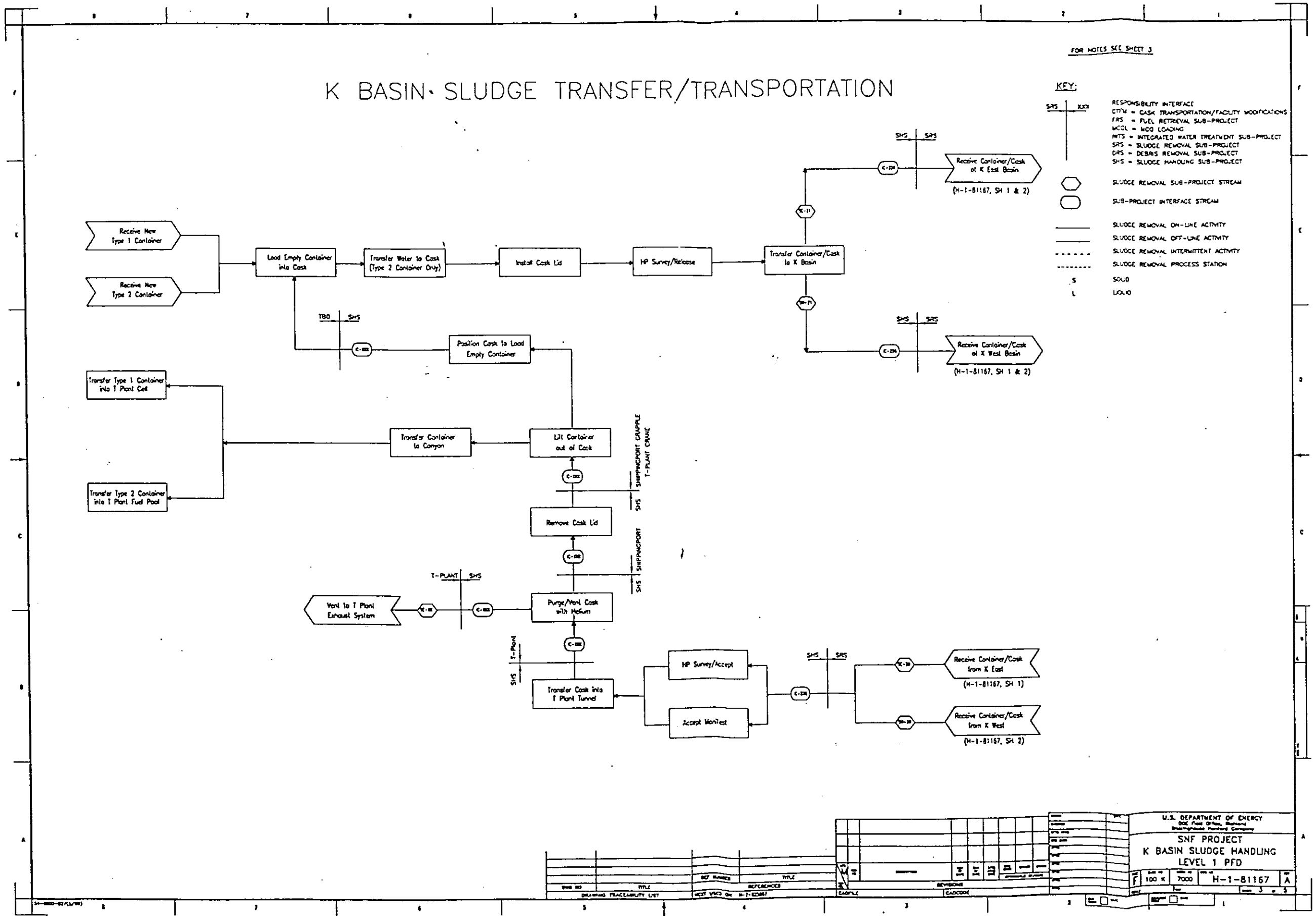
FOR NOTES SEE SHEET 3
K BASIN SLUDGE TRANSFER/TRANSPORTATION
KEY:
SRS XXX
RESPONSIBILITY INTERFACE
CTTM = CASK TRANSPORTATION/FACILITY MODIFICATIONS
FRS = FUEL RETRIEVAL SUB-PROJECT
MCOL = MCO LOADING
MTS = INTEGRATED WATER TREATMENT SUB-PROJECT
SRS = SLUDGE REMOVAL SUB-PROJECT
DRS = DEBRIS REMOVAL SUB-PROJECT
SHS = SLUDGE HANDLING SUB-PROJECT
SLUDGE REMOVAL SUB-PROJECT STREAM
SUB-PROJECT INTERFACE STREAM
SLUDGE REMOVAL ON-LINE ACTIVITY
SLUDGE REMOVAL OFF-LINE ACTIVITY
SLUDGE REMOVAL INTERMITTENT ACTIVITY
SLUDGE REMOVAL PROCESS STATION
S SOLID
L LIQUID
Receive New Type 1 Container
Receive New Type 2 Container
Load Empty Container into Cask
Transfer Water to Cask (Type 2 Container Only)
Install Cask Lid
HP Survey/Release
Transfer Container/Cask to K Basin
Receive Container/Cask at K East Basin
(H-1-81167, SH 1 & 2)
Receive Container/Cask at K West Basin
(H-1-81167, SH 1 & 2)
SHS SRS
TBD SHS
Position Cask to Load Empty Container
Transfer Type 1 Container into T Plant Cell
Transfer Type 2 Container into T Plant Fuel Pool
Transfer Container to Canyon
Lift Container out of Cask
SHIPPING PORT GRAPPLE
T-PLANT CRANE
Remove Cask Lid
SHIPPING PORT
T-PLANT SHS
Vent to T Plant Exhaust System
Purge/Vent Cask with Helium
T-Plant
Transfer Cask into T Plant Tunnel
HP Survey/Accept
Accept Monitest
Receive Container/Cask from K East
(H-1-81167, SH 1)
Receive Container/Cask from K West
(H-1-81167, SH 2)
U.S. DEPARTMENT OF ENERGY
SNF PROJECT
K BASIN SLUDGE HANDLING
LEVEL 1 PFD
100 K
7000
H-1-81167
A
3 of 5
DRAWING TRACEABILITY LIST
REFERENCES
REVISIONS
CADFILE
CADCODE

4.1.3. Container Unloading and Placement

Container unloading operations will be done remotely using the canyon crane system. T Plant operations will remove the shipping cask lid bolts and then evacuate the tunnel. The crane operator will then position the canyon crane, which will be outfitted with the primary sludge handling grappling device, remove the cask lid, and place it on the trailer bed or tunnel floor. The sludge container will then be lifted out of the cask and moved into the canyon for interim storage in a cell (Type 1 containers) or in the pool (Type 2 containers). As a sludge container is moved from the tunnel into the canyon, the crane operator will verify the identification number remotely, and record the container number and weight.

- T Plant crane shall be capable of remotely grappling container.
- Crane and hooks shall be capable of lifting a fully loaded sludge container.
- The 10-ton crane shall be equipped with a load cell with an accuracy of ± TBD.
- The load cell shall alarm at 125% of the valid load. Primary readout for the load cell shall be in the crane cab, with secondary readout in the T Plant camera room, which is in Section 18.
- Container labeling shall be visible from the crane cab and shall include letters at least 1 ½ inches tall. Labels shall include a unique identification number and other information TBD.
- Provisions for real-time recording/videotaping of the movement and placement of sludge containers shall be provided. The system shall have sufficient resolution and clarity to discern the identification labels on the container.
- Labels shall be permanent and have a design life of 30 years.
- Visual and audible alarms shall be provided to alert the crane operator prior to automatic shutdown.

4.1.4. Transporter Exit from T Plant

After the sludge container has been removed from the cask, the truck will reenter the tunnel, connect with the trailer, and exit T Plant. The transport vehicle and cask will be checked and released by radiological protection technicians prior to its movement to a TBD facility for receipt of another empty container and its return to the K Basins.

4.1.5. Interim Storage

Once the sludge containers have been placed in the interim storage location, they will require surveillance to ensure that safety, regulatory, and safeguards and security requirements are being met. It is assumed that sludge storage will be regulated under both TSCA and RCRA. Water levels within the Type 1 containers will be monitored, with water additions made as necessary. Pool storage conditions (e.g., water quality, water temperature, water level, and ion exchange

column status) will also be monitored. Provisions for water addition to the pool shall be provided.

4.1.5.1. Store Type 1 Containers in Canyon Process Cells.

- Process cell space with RCRA secondary containment (capable of containing 10% of all stored waste) shall be available.
- Process cells to be used for storage of Type 1 sludge containers shall have existing floor drains permanently isolated from the T Plant header collection system.
- Secondary containment shall be provided with leak detection to meet WAC 173-303 requirements.
- Secondary containment system shall not interfere with air duct outlets in the cell.
- Racks shall be provided for Type 1 container storage. Racks shall ensure that sludge containers are spaced not less than 25 in. center-to-center. Racks shall be spaced away from the cell walls such that the loads from a fully loaded rack are not transferred to the cell walls.
- Canyon ventilation shall be capable of ensuring flammable gas build-up remains below the Lower Explosive Limit (LEL).
- Surveillance system capable of reading container markings and labels (when cover is removed) shall be provided.
- Storage configuration hardware shall be compatible with the container.
- Capability to place existing cover blocks over the cell shall not be precluded.
- A back-up plan to remedy inspection problems and address leaks and spills shall be provided.
- A storage area for container overpacks (for 5% of the total number of containers) shall be provided. Overpack design is the responsibility of the container designer.

4.1.5.2. Store Type 2 Containers in T Plant Pool.

- Racks shall be provided for storage of Type 2 containers in the pool. Racks shall ensure that sludge containers are spaced not less than 25 in. center-to-center. Racks shall be spaced away from the pool walls such that the loads from a fully loaded rack are not transferred to the pool walls.
- Canyon ventilation shall be capable of ensuring flammable gas build-up remains below the Lower Explosive Limit (LEL).
- Containers shall be visible from the surveillance location.
- A surveillance system, which is capable of reading container markings and labels, shall be provided.
- Storage configuration hardware shall be compatible with the container and shall not degrade the water quality of the pool.
- Pool space with RCRA secondary containment shall be available. The secondary containment method chosen shall have the integrity to contain all liquid within the pool and shall be compatible with any waste that leaks from a container and all operational activities in the pool.

- A method for determining leaks from the sludge containers shall be provided. The leak detection method may include a water monitoring/sampling system to determine water quality as well as determine leaks from the primary containers.
- Pool shall be equipped with a means of maintaining pool water temperature less than 78 °C. Heat rejection capability of the pool must be sufficient to remove 20,000 BTU/hr.
- Pool shall have a cover capable of covering the entire pool.
- One half of the replacement cover over the pool (east end) shall be designed such that it is capable of withstanding a drop of a 5 ft by 9 ft box weighing 5 tons from a height of 4 ft. The remaining half shall be capable of supporting a live load of 100 psf.
- Cover design shall provide for routine water sampling, radionuclide monitoring, water addition, and surveillance activities to proceed without the use of the crane.
- Replacement cover shall allow for convective cooling and dissipation of hydrogen gas (to levels below the lower explosion limit) from the surface of the pool.
- Movement over the pool shall not be limited by the storage of the sludge.
- Water level monitoring equipment shall be provided for the pool.
- The pool shall have a means of detecting and maintaining pool water within water quality requirements to be determined by the facility designer during the conceptual design. These requirements may include pH, temperature, radiation level, specific radionuclide content, and turbidity.
- Water monitoring system shall be provided to detect possible leaks.
- A back-up plan to remedy inspection problems and address leaks and spills shall be provided.
- Capability for addition of water to the pool shall be provided.

4.2. MECHANICAL PROCESS REQUIREMENTS

Mechanical equipment used to transport and store sludge shall be designed so that no single failure of mechanical or electrical origin will cause a loss of control resulting in an unrecoverable condition or pose a risk of operator injury.

All support systems and attachment points shall be designed to permit ease of installation and removal to ALARA requirements. Any mechanical equipment in a high radiation area shall be designed for remote maintenance or changeout.

4.3. PIPING AND VESSELS REQUIREMENTS

Any piping and hoses that are determined to be necessary to support the interim storage of sludge at T Plant, but currently do not exist at T Plant, shall comply with the requirements in this section. Emphasis will be given to select off the shelf, readily available standard components and parts to do the job.

Piping and vessels shall be chemically, physically, and radiologically compatible with any chemicals that they may contact during the sludge handling process. Unless otherwise stated, materials selection shall be based on a 30-year life. At connection points to existing systems, new piping systems shall match the existing systems. Design of safety significant and general service piping, valves, and flanges shall comply with ASME B31.1 *Power Piping.*

Piping and vessel materials shall be selected to minimize the potential for internal contamination and subsequent decontamination and disposal issues. Interior surfaces of pipes and vessels shall be smooth, non-porous, and free from cracks, and sharp corners. Dose commitment of repair, replacement, inspection, removal and disposal shall be considered when designing all piping systems.

Piping and vessels shall be free from dead spaces and stagnant legs. Pipes and vessels shall be sloped to be self-draining.

Pipe fittings shall be limited to the minimum number compatible with operation and maintenance activities. Pipe length shall be limited to that compatible with operation and maintenance activities.

The water transfer piping/hoses and associated connectors shall be designed to handle the routine flow and pressure capacities.

Piping/hose connections between pieces of equipment shall use confinement control to ensure contaminants stay within defined boundaries. If cross connections between contaminated and non-contaminated systems are necessary, an air gap shall be used to prevent backflow of contaminated liquids into the non contaminated system. Every pipe entering or exiting a process cell or contamination area shall be equipped with a block (isolation) valve.

All valves shall show position indication in the control area for actuated valves and on any manual valves that are critical to providing process information (separate on/off confirms, indication of all positions of multi-way valves, and 0-100% position indication for modulated). All valves shall be compatible with control system.

Piping shall be labeled per ANSI A13.1, *Scheme for the Identification of Piping Systems* (ANSI 1981), and the labeling conventions in *T Plant Master Equipment List*, HNF-SD-WM-EL-007 (Harp 1997).

If pressure vessels are provided to support the interim storage of sludge at T Plant, they shall meet the requirements of ASME B&PV code, Section VIII, *Unfired Pressure Vessels*, Division 1.

Tanks/vessels shall be critically safe as determined by safe geometry. Features necessary for criticality control shall meet safety class criteria per DOE Order 6430.1A.

Tank/vessel design shall preclude the possibility of accumulating either more than 25 percent of the lower flammability limit of hydrogen or a problematic quantity of hydrogen as determined by

the fire hazards analysis. All contaminated or potentially contaminated process vents shall be filtered using a Nucfil filter and routed to an acceptable discharge point.

Piping hose connections shall have self-sealing, no drip disconnects unless shown to be unnecessary by ALARA requirements. Standard valves and fittings shall be used to extent practical.

Piping and vessels whose contents have the potential for freezing shall include freeze protection. All sludge components subject to freezing should be protected below 0°C (32°F).

4.4. INSTRUMENTATION AND CONTROLS

Any instrumentation that is determined to be required to support sludge storage, but currently does not exist at T Plant, shall comply with the requirements of this section.

Instrumentation and control shall conform to applicable ANSI, Institute of Electrical and Electronics Engineers (IEEE) and Instrument Society of America (ISA) standards. Human factors considerations should be in accordance with DOE Order 6430.1A, Section 1300. Control equipment shall comply with National Electric Manufacturing Association (NEMA) ICS Standards and Underwriters Laboratory (UL) 508 (UL-508, 1993).

Labeling of equipment installed in the K Basins shall comply with the requirements of *K-Basin Design Guidelines*, WHC-SD-SNF-DGS-001, Rev. 0 (Mills, 1995) and *Job Control System Component Identifier and Labeling Control*, AP 6-005-00. Labeling of equipment installed at T Plant shall conform to the labeling conventions in *T Plant Master Equipment List*, HNF-SD-WM-EL-007 (Harp, 1997).

The Sludge Handling System shall provide instrumentation to monitor the storage process. To the extent practical, monitoring and controls shall be located at a central control area outside the high radiation area. Instrumentation shall be provided so that, during routine operation, the process will be self-functioning (i.e., the number of operating and oversight personnel will be minimized).

Where necessary for safety or ALARA reasons, remote monitoring shall be considered, including remote video cameras on critical operations.

On loss of electrical or pneumatic power, active process components shall assume a position or mode that will preclude an unsafe process condition. This "fail-safe" condition shall be specified in all design and operation documentation. Diverse methods of actuation and manual overrides shall be considered for control and monitoring systems having failure consequences important to facility or operator safety.

The Sludge Handling System shall provide instrumentation to monitor and control the process and to ensure environmental and personnel safety. The instrumentation shall be designed to

meet the applicable hazards classification and should include alarms for radioactivity release via continuous air monitoring, leak detection, and pressure anomalies.

Instrumentation shall be provided for the early detection of leakage from any primary confinement barrier. If the consequences of this leakage have safety or operator consequences, this instrumentation shall be alarmed at the central control area.

Safe shutdown of the process in the event of off-normal occurrences is required. Position indication on all actuated valves and on any manual valves that are critical to providing safety or process knowledge shall be required, such as separate on/off confirms, indication of all positions of multi-way valves, and 0 - 100% position indication for modulated valves. Alarm systems shall be installed to shut down the operation and alert personnel of any off-normal condition that has safety or dose consequences.

Backup power for key instrument and control functions shall be considered. All components shall revert to a safe operating condition on loss of power or random failure if there are safety consequences.

Specific supporting documentation requirements for instrumentation and control systems shall be identified during conceptual design.

4.4.1. Functional Requirements

Instrumentation and control (I&C) for the Sludge Handling System shall provide the following functions:

1. Provide the capability to monitor and control any new equipment added by this project. Annunciator sequencing will be determined during the design process. Displays shall be intuitive, requiring a minimum amount of operator training.

2. Provide the capability to monitor performance of the Sludge Handling System via video equipment. If the purchase of new video equipment is required to meet this requirement, the Design Authority shall review video equipment selection.

3. Be designed to be "fail-safe" with regard to both personnel safety and environmental protection. In the event of loss of power, an alarm which indicates this condition should be provided as needed to ensure safety and reliable operations (power for key instruments, equipment, and controls; other valves shall be fail-safe).

4. Accommodate required calibrations and testing.

Data shall be collected for storage and analysis, and the frequency of collection shall be determined as the design proceeds. The format for data exchange shall be (EXCEL™)[2] in comma delimited format.

Local instruments shall be provided for components requiring manual control to ensure normal operations, ease of trouble-shooting and maintenance, and personnel safety. Particular emphasis shall be employed to prevent radioactive contamination and to allow system to self-drain. Design shall meet requirements of *Occupational Radiation Protection* (10 CFR 835) and *Project Hanford Radiological Control Manual,* HNF-5173. Refer to WHC-SD-GN-DGS-30011, *Radiological Design Guide* (Evans 1994).

Human factors engineering principles should be incorporated into the design and layout of the system, including placement and location of visual indicators, calibration equipment, and maintenance access areas. Color coding shall be defined and approved prior to final design. Labeling shall comply with the conventions in *T Plant Master Equipment List,* HNF-SD-WM-EL-007 (Harp, 1997). T Plant Cognizant Engineering shall approve instrument/equipment identification.

Remote control and monitoring equipment shall be installed in a monitoring and control area located within T Plant. The exact location of the monitoring and control area shall be coordinated with other T Plant Projects and identified during the design process.

Selection of area radiation monitoring equipment shall be coordinated with other T Plant Projects and must meet requirements of 10 CFR 835 and *Project Hanford Radiological Control Manual,* HNF-5173, for monitoring instruments. Instrument selection must account for the environment in which it will operate: radiation, high humidity, slurries, dust, temperature extremes, etc.

4.4.2. Performance Requirements

1. The instrumentation shall conform to DOE 6430.1A, *General Design Criteria,* and applicable American National Standards Institute (ANSI), Institute of Electrical and Electronics Engineers (IEEE) and Instrument Society of America (ISA) standards. See Section 6.0.

2. The instrumentation should demonstrate proven industrial application as field process equipment, suitable for the anticipated operating conditions.

3. Key components shall have redundant capabilities.

4. Instrumentation field contacts shall be powered by 24 V DC unless otherwise authorized by the Design Authority.

5. Equipment that may fail or wear out before the minimal three years shall be

2 EXCEL is a registered trademark of the Microsoft Corporation.

identified and appropriate spares identified for easy change out (i.e., ALARA).

6. National Institute of Standards and Testing (NIST) traceable documentation shall be provided for calibration of all instruments. All identified instruments shall be calibrated by Hanford Calibration Lab prior to use.

7. Electric motors to be placed in a fixed remote location within the T Plant Canyon shall be monitored for their amperage, and their indicators shall have a minimum accuracy of ±0.5 amps.

8. Positive pressure indicating systems shall have a minimum total loop accuracy of ±5% of full scale. Vacuum pressure (below 1 atm) indicating systems shall have a minimum total loop accuracy (from sensor to digital readout) of ±5% of full scale.

9. At a minimum, a camera shall be mounted such that a remote operator can easily view sludge container identification markings. The CCTV viewing monitor shall be located in an uncontaminated area within the T Plant facilities. The camera shall be radiation hardened, supplied with adequate lighting, and capable to perform zoom/tilt/pan functions under conditions for the duration of the Sludge Handling System operation activities at T Plant.

10. Equipment located in a contaminated environment shall be evaluated for the need to be radiation-resistant and shall be designed to minimize build-up of contamination.

5.0 T PLANT FACILITY CRITERIA

The sections below provide the general design requirements for the required upgrades and modifications to T Plant that are needed to support the Sludge Handling System. A brief description of the existing T Plant Canyon (Building 221-T) and its primary support systems can be found in Appendix A.

The Shippingport Fuel Removal Project will make changes to the existing structure and systems at T Plant. The facility design team shall consider ongoing changes within the T Plant canyon planned or made by the Shippingport Fuel Removal Project. The FH Project Team shall define the interfaces between the Shippingport project and SHS in a specific interface control sheet.

5.1. ARCHITECTURAL AND CIVIL/STRUCTURAL

The basic dimensions and characteristics of key areas and structures within the canyon are described in Section A.1 of Appendix A.

- The Sludge Handling System at T Plant shall be placed in and conform to TBD areas within T Plant. Type 1 sludge containers shall be stored in the T Plant TBD process cells; Type 2 sludge containers shall be stored in the existing T Plant pool (Cell 2-R).

- All important-to-safety structures and equipment designed for the Sludge Handling System shall be designed to meet PC-3 criteria.

- The pool wall shall not contain unrepaired cracks that are judged to impair the structure performance of the pool (Erpenbeck, 2000a).

- Design changes to T Plant as a result of the Sludge Handling System shall not compromise the response of the structure to seismic (see Erpenbeck, 2000a) or other natural forces.

5.2. HEATING, VENTILATION, AND AIR CONDITIONING

Key features of the current HVAC system are described in Section A.2 of Appendix A.

- The T Plant HVAC system shall support the needs of the Sludge Handling System, including dissipation of hydrogen and other flammable gases that may be generated during storage.

5.3. UTILITIES

Key features of the current T Plant canyon water and electrical systems are described in Section A.3 of Appendix A.

5.3.1. Water

- The current T Plant water utility shall support the needs of the Sludge Handling System.

5.3.2. Electrical

- The current T Plant electrical utility shall support the needs of the Sludge Handling System.

5.4. COMMUNICATIONS SYSTEMS

Communication in the canyon is currently achieved through the use of 2-way radios; however, hard wiring for a transmitter/receiver antenna is being added to the canyon. When this is completed, voice microphones, which are not required to be hand-held, will be used for communication in the canyon.

- The design of the Sludge Handling System shall be compatible with current communications systems used in the T Plant canyon.

5.5. AUTOMATIC DATA PROCESSING

No systems for automatic data processing currently exist at T Plant. If automatic data processing capabilities are required for the Sludge Handling System, the Design Authority shall approve the system chosen.

5.6. MAINTENANCE

T Plant has an active preventive and corrective maintenance program. As noted elsewhere in this document, the Sludge Handling System constituent components shall be designed to minimize maintenance and testing requirements. Components requiring maintenance shall be designed in accordance with ALARA principles.

5.7. FIRE PROTECTION

The Sludge Handling project is responsible for the upgrade of fire protection systems at T Plant prior to the receipt of sludge. Design of fire protection system for T Plant shall comply with the following requirements:

- Applicable DOE Orders and Standards and the documents called out by the DOE Orders and Standards;

- Doe Richland Directives and the documents called by the directives;
- Applicable Washington State Administrative Codes;
- The codes and standards of the National Fire Protection Association (NFPA); and
- The Uniform Building Code (UBC).

Fire protection systems shall be designed, installed, tested, and rendered operational in accordance with the applicable codes and standards of the NFPA. Administration of the required codes, standards, and Orders shall be as directed in the applicable fire protection related Hanford Procedures. The Hanford Fire Marshal's office shall serve as the authority having jurisdiction for matters regarding fire protection.

New fire alarm systems shall be of a type listed and approved for the intended use. Fire alarm systems shall be compatible with makes and models approved for use on the Hanford site and shall report directly to the Hanford Fire Department through a Radio Fire Alarm Reporter box.

Materials and equipment procured for use in fire protection systems shall be tested, listed, and approved for the intended use by nationally recognized testing laboratories. Listing, testing, and approvals shall be verified by listing in Underwriter's Laboratories directories, list in Factory Mutual Research Corporation Approval Guide, or by submission of test reports from a nationally recognized testing laboratory indicating the equipment or material successfully passed required standardized test procedures.

The following open requirements identified in the T Plant Fire Hazards Analysis (Keene, 2000) shall be included in the design of the Sludge Handling System:

1. Install a fire alarm system to include automatic early detection, manual activation, and alarm notification throughout the unprotected areas of 221-T Building.

2. Install dry standpipes in the 221-T canyon per the requirements of NFPA 14. Standpipe stations shall be installed as Class 3, without hoses or hose cabinets.

3. Install an automatic sprinkler system throughout 271-T Building.

4. The draft *Fire Hazards Analysis for T Plant Complex* (Keene, 2000) is expected to bound the Sludge Handling project. Any changes to the fire hazards, operational methodology, or other parameter that might impact the findings of the FHA shall be identified.

Fire upgrades must be completed prior to the readiness assessment for the receipt of Type 2 containers.

6.0 GENERAL REQUIREMENTS

6.1. SAFETY

The safety authorization basis for the Sludge Handling Project shall be developed using a graded approach based on the probability of an offsite and/or onsite dose release and the consequences of such a release. The goal of making radiation dose exposure as low as reasonable achievable (ALARA) for onsite workers will be used for this Project.

6.1.1. CRITICALITY

The design of the Sludge Handling Project shall emphasize provisions to ensure criticality is not a credible event and that T Plant will remain a limited control facility. Criticality prevention shall be based on the double-contingency principle: that at least two unlikely, independent, and concurrent changes (contingencies) in processing and/or operating conditions must occur before criticality is possible.

The design of process and equipment shall use the most positive practical method to prevent a criticality accident. As a first priority, reliance shall be placed on equipment design in which dimensions of the contained fissionable material and spacing between equipment are limited via passive engineering controls (HNF-PRO-537). Where geometry control is not feasible, the preferred order of controls is other passive engineering controls, active engineering controls, and administrative controls.

The FH Project Team shall be responsible for the preparation of a Criticality Safety Evaluation Report (CSER) in accordance with HNF-PRO-539, *Criticality Safety Evaluations*, and HNF-PRO-334, *Criticality Safety: General Requirements*. A Preliminary Criticality Study has been prepared (Erickson 2000), and this preliminary study shall provide the basis for the final CSER to be done by the FH Project Team. The FH Project Team will review and approve the assumptions used for the criticality analysis. Conditions not specified in the CSER shall be reviewed and controlled per HNF-PRO-704. All criticality concerns relevant to the Sludge Handling Project will be addressed during the design phase, and a criticality analysis will be performed to support the design.

6.1.2. SAFETY ANALYSIS

Sludge Handling Project activities shall be reviewed by the FH Project Team for potential Unreviewed Safety Questions (USQ) to the Safety Authorization Basis for the appropriate facility (K Basins or T Plant) or the Safety Analysis Report for Packaging (SARP). The USQ process will be used to determine if activities are bounded by the current authorization basis.

Using HNF-PRO-704 requirements and applicable safety authorization basis documents, the relevant safety designation for systems, components, and structures shall be determined and applied to this project. The final location of the equipment will determine whether it will be covered under the K Basin or T Plant authorization basis documentation.

6.1.2.1 Safety Documentation

The following safety activities shall be performed and documented:

1. **Hazards Evaluation**. An initial *Hazard Evaluation for Storage of SNF Sludge at the Solid Waste Treatment Facility* (Schultz, 2000) and a *Preliminary Accident Analysis for Storage of K Basin Sludge at T Plant* (Himes, 2000) have been prepared for the Sludge Handling Project. The FH Project Team shall update these documents as the design progresses. The hazards and accident evaluations identify postulated accident scenarios including the design basis accidents, assess the consequences of those accidents, determines the probability of those accidents, and assess the adequacy of proposed barriers for the prevention of the accidents. Analysis of the hazards and accidents identified is performed in accordance with HNF-PRO-704.

2. **Designation of SSCs Important to Safety**. The FH Project Team, in conjunction with the design team, shall designate all safety class and safety significant structures, systems, and components (SSCs), in accordance with HNF-PRO-704.

3. **Hazard Categorization**. Radioisotope inventories are required to support the determination of the Hazards Category. It is the responsibility of the FH Project Team to determine the Hazards Category from the proposed design configuration.

4. **Safety Authorization Basis Updates**. The FH Project Team will review the safety bases for consistency with the either K Basins or T Plant Safety Analysis Report (SAR), as applicable, using the Unreviewed Safety Question (USQ) process. The FH Project Team will maintain responsibility for updating both safety bases as necessary. The T Plant Safety Authorization Basis will be updated in accordance with the *Criteria Document for the Sludge Storage at T Plant Safety Assessment* (Ames, 2000) and the *Criteria Document for the Sludge and Debris Removal from K Basins Safety Assessment* (Peck, 2000).

5. **Safety Analysis Report for Packaging**. The FH Project Team shall provide an approved SARP for the packaging and transport of the sludge from the K Basins to T Plant.

6. **Fire Hazards Analysis Updates.** The necessary information to update both the *Fire Hazards Analysis for the K Basins Facilities at the 100 K Area* (Mertz 2000) and the *Fire Hazards Analysis for T Plant Complex* (Keene, 2000) shall be provided. As a minimum, this information will include a listing of the inventory at risk. The FH Project Team will

maintain responsibility for incorporating the supporting fire protection requirements/analysis results into the appropriate fire hazards analysis documentation.

7. **Criticality Safety Evaluation Report.** A Preliminary Criticality Study has been prepared (Erickson 2000), and this preliminary study shall provide the basis for the final Criticality Safety Evaluation Report (CSER). The FH Project Team will review and approve the assumptions used for the criticality analysis.

6.1.2.2 Analyses

Analyses used to support the design of the various system components shall be provided. As a minimum, the following analyses shall be provided: structural, shielding, ALARA, criticality, gas generation, and heat loading analyses.

1. **Structural Analysis.** Structural analysis shall be performed using PC-3 criteria as defined in HNF-PRO-097, *Engineering Design and Evaluation*, Rev. 0, Project Hanford Policy and Procedure System. The existing T Plant structure has been evaluated for seismic conditions (Erpenbeck, 2000a), and initial structural design concepts for anticipated seismic upgrades to the 221-T pool have been proposed (Erpenbeck, 2000c). A stress analysis for any new SSCs under normal and seismic conditions shall be provided.

2. **Shielding Analysis.** Shielding analysis shall be performed for the Sludge Handling System components to ensure dose rates are ALARA. To ensure that standardized, validated methods are followed for shielding calculations, the Design Authority will review and concur with the shielding design code(s). In addition, the Design Authority will concur with source terms, bases for assumptions, and modeling performed in support of shielding design. Shielding calculations shall be reviewed and accepted by the Design Authority before equipment is fabricated.

3. **ALARA Analysis.** The ALARA analysis shall include a "time-motion" study that addresses normal operations and maintenance activities. ALARA analysis including cost-benefit analysis relative to the dose received should be performed during the design process. This cost-benefit analysis shall be performed as prescribed in HNF-PRO-621, *ALARA Decision Making Methods*. For cost-benefit analysis, the monetary value of 1 manRem of collective dose shall be $30,000.

4. **Criticality Analysis.** The design shall meet the criticality prevention requirements as detailed in DOE Order 5480.24, *Nuclear Criticality Safety*, HNF-PRO-334, and HNF-6435, *Preliminary Criticality Study for K Basin Sludge Containers at T Plant*. A description of how the design meets these requirements, including the bases, calculations, and assumptions shall be provided in a criticality evaluation report. Codes/analysis methods and assumptions shall be accepted by the Design Authority prior to implementation of the design

5. **Gas Generation Analysis.** Gas generation analysis shall be performed to ensure that the concentration of hydrogen within the system components will not exceed 25% of the lower flammability limit (10,000 ppm). The analysis shall consider both hydrogen generation from radiolysis and uranium oxidation reactions. In order to meet this requirement, the airflow required for the cell storage configuration shall not be less than 2.1 CFM inside the cells, which equates to 79.8 CFM in the canyon (Erpenbeck 2000b). Design and analysis shall comply with the current NFPA 69, *Standard on Explosion Prevention Systems* (NFPA 1997).

6. **Heat Loading Analysis.** Heat loading analysis, which will determine the sludge temperatures at which the thermal stability of the sludge containers can be ensured during transport and storage, is being performed by the FH Project Team.

7. **Flow Analysis.** Flow analysis shall be performed for sizing the system components. Pipes, pumps, and vessels shall be included as a minimum.

6.1.3. RADIOLOGICAL CONTROL

Guidelines for radiological design as applicable to contamination control are provided in WHC-SD-GN-DGS-30011, *Radiological Design Guide*, Section 3.0 (Evans 1994). Design shall meet requirements of 10 CFR 835 and the *Project Hanford Radiological Control Manual*, HNF-5173. Radiological aspects of this design shall be reviewed in accordance with HNF-PRO-1622, *Radiological Design Review Process.*

6.1.3.1 Smearable Contamination

The Sludge Handling System shall be designed and constructed to be flushable. External smearable contamination shall be limited to the levels permitted by the provisions of the *Project Hanford Radiological Control Manual*, HNF-5173. The Sludge Handling System shall be designed to confine contaminants as close as practical to the source. Ventilation flow in the canyon is from areas of low contamination to areas of higher contamination.

Some construction activities may require workers to be in close proximity to radionuclide contamination. All controls warranted to afford protection from potential radionuclide releases shall be implemented.

6.1.4. SHIELDING

Guidelines for radiological design provided in the *Project Hanford Radiological Control Manual*, HNF-5173, and in WHC-SD-GN-DGS-30011, *Radiological Design Guide*, Section 7.0 (Evans 1994), shall be considered. During the design of T Plant modifications, the following objectives shall be adopted:

1. Optimization methods shall be used to assure that occupational exposure is maintained ALARA in developing and justifying facility design and physical controls.

2. The design objective for controlling personnel exposure from external sources of radiation in areas of continuous occupational occupancy (2000 hours per year) shall be to maintain exposure levels below an average of 0.5 mrem (5 μSv) per hour and as far below this average as is reasonably achievable. The design objectives for exposure rates for a potential exposure to a radiological worker where occupancy differs from the above shall be ALARA and shall not exceed 20 percent of the applicable standards in 10 CFR 835.202.

Shielding analysis shall be performed for the Sludge Handling System components to ensure dose rates are ALARA. To ensure that standardized, validated methods are followed for shielding calculations, the Design Authority will review and concur with the shielding design code(s). In addition, the Design Authority will concur with source terms, bases for assumptions, and modeling performed in support of shielding design. Shielding calculations shall be reviewed and accepted by the Design Authority before equipment is fabricated.

Shielding shall be provided to reduce worker exposure. Calculations to optimize and define specific shielding needs shall be made during the design process in accordance with optimization methods required by 10 CFR 835.1002a.

6.1.5. INDUSTRIAL SAFETY

Industrial safety requirements are primarily governed by the Code of Federal Regulations (CFRs) and apply to all facilities. Federal safety and health standards shall be used and enforced during all construction phases of this project. Operations shall be conducted in conformance with applicable OSHA standards to ensure a safe working environment. Routine construction hazards will exist during equipment installation and facility modification. Installation and operation shall conform to *Occupational Safety & Health Standards* (29 CFR 1910).

Existing work procedures will be implemented to ensure the safety of the construction and operating personnel in and around the area of the existing K Basin and T Plant facilities. Safety and health standards will be used and enforced during all construction phases of this project.

Routine construction hazards may exist during construction of the Sludge Handling System. Field operations shall be conducted in conformance with the S/RIDS for the cognizant organization and applicable OSHA standards to ensure a safe working environment. The probability of a system failure resulting in a fatality to operating personnel must be less than one chance in a million at the 95% confidence level.

6.1.6. FIRE PREVENTION

Fire protection systems shall be designed to meet the requirements of DOE Order 5480.7A, *Fire Protection*. The design of the Sludge Handling System shall be reviewed and approved by the cognizant Fire Protection Engineer(s) to ensure compliance with all applicable fire protection standards prior to installation. Combustible loading shall be evaluated and conform with HNF-PRO-350 and all greenhouse film shall meet NFPA 701 fire resistant test criteria. The design shall be evaluated and conform to the requirements of NFPA 69 (NFPA 1997) with respect to a explosion prevention system and venting of trapped gases.

The necessary information to update the *Fire Hazards Analysis for the K Basins Facilities at the 100 K Area* and the *Fire Hazards Analysis for the T Plant Facilities at the 200 W Area* shall be provided. As a minimum, this information will include a listing of the inventory at risk. The FH Project Team will maintain responsibility for incorporating the supporting fire protection requirements/analysis results into the appropriate K Basins and T Plant documentation.

6.1.7. TRAFFIC SAFETY

A Safety Report for Packaging (SARP) will be prepared to address the transportation of the sludge containers from the K Basins to T Plant (see Section 6.1.1).

Site-wide traffic safety guidance is found in HNF-PRO-100, *Transportation Safety*.

6.1.8. ALARA

The design features of the Sludge Handling System shall be consistent with the As Low As Reasonably Achievable (ALARA) requirements of this Section. Exposure of personnel to radiological and other hazardous materials associated with sludge treatment shall be minimized.

Measures shall be taken to maintain radiation exposure in controlled areas ALARA through physical design features and administrative controls. The primary methods used shall be physical design measures (e.g., confinement, ventilation, remote handling, and shielding). Administrative controls shall be employed only as supplemental methods to control radiation exposure.

For specific activities where use of physical design features is demonstrated to be impractical, administrative controls shall be used to maintain radiation exposures ALARA.

During the design of T Plant facility modifications, the following objectives shall be adopted:

1. Optimization methods shall be used to assure that occupational exposure is maintained ALARA in developing and justifying facility design and physical controls.

2. The design objective for controlling personnel exposure from external sources of radiation in areas of continuous occupational occupancy (2000 hours per year) shall be to maintain exposure levels below an average of 0.5 mrem (5 μSv) per hour and as far below this average as is reasonably achievable. The design objectives for exposure rates for potential exposure to a radiological worker where occupancy differs from the above shall be ALARA and shall not exceed 20% of the applicable standards in 10 CFR 835.202.

3. Regarding the control of airborne radioactive material, the design objective shall be, under normal conditions, to avoid releases to the workplace atmosphere and, in any situation, to control the inhalation of such materials by workers to levels that are ALARA; confinement and ventilation shall normally be used.

4. The design or modification of T Plant and the selection of materials shall include features that facilitate operations, maintenance, decontamination, and decommissioning of the facility and the Sludge Handling System.

For any cost-benefit analyses, the monetary value of 1 rem of effective dose shall be $30,000.

All actions and decisions taken to maintain occupational exposures ALARA shall be documented [10 CFR 835.704(b)]. These records shall be retained until final disposition is authorized by DOE [10 CFR 830.701(b)].

Area radiation monitors shall be provided if determined to be required. To ensure compatible systems are used for all facility projects, the cognizant Design Authority shall approve equipment selection.

A shielding analysis shall be performed for the Sludge Handling System equipment and components to ensure dose rates are ALARA. ALARA documentation including a preliminary and final ALARA design review will be performed and documented for the selected concept design.

ALARA design reviews for contractor documents, conceptual design, preliminary design, final design, test plans, and mock-ups shall be conducted by the FH Project Team. A post construction review will also be conducted to evaluate the effectiveness of the design.

6.1.8.1 Operator Dose Exposure

The Sludge Handling System shall be designed such that equipment setup, maintenance, and operations can be accomplished with individual worker annual dose equivalent optimized and ALARA, in accordance with 10 CFR 835.1002.

6.1.8.2 Manpower Requirements

The Sludge Handling System shall be designed such that equipment setup, maintenance, and operations can be accomplished with a minimum operations staff based on ALARA concerns.

6.2. ENVIRONMENTAL PROTECTION

Environmental compliance requirements for the handling and storage of the K Basins sludge include the following:

- *National Environmental Policy Act* (NEPA). The FH Project Team will complete an Environmental Assessment (EA) for the Sludge Handling System. A Finding of No Significant Impact (FONSI) must be issued prior to the start of detailed design for T Plant modifications. Because T Plant is registered on the Historical Register, NEPA documentation will include a Cultural Resources Review.

- *Comprehensive Environmental Recovery, Compensation, and Liability Act* (CERCLA). As a remedial action site, the K Basins are regulated under CERCLA. A CERCLA Record of Decision, which indicates that K Basins sludge will be transferred to a waste management facility in the 200 Areas, was issued in 1999 (EPA, 1999).

- *Toxic Substances Control Act* (TSCA) and 40 CFR 761 as well as the implementing requirements in HNF-PRO-451, *Regulated Substance Management*. Storage of K Basins sludge is regulated under TSCA for PCBs.

- *Resource Conservation and Recovery Act* (RCRA) and WAC 173-303. When removed from the basins, it is assumed that the sludge will be designated as a hazardous/dangerous waste. The assumed mixed waste designation is based on the total concentrations of several metals as well as reactivity concerns. If the sludge is designated as a hazardous/dangerous waste on removal from the K Basins, the sludge shall be stored at T Plant in accordance with WAC 173-303.

- *Clean Air Act (CAA), Washington Clean Air Act,* and WAC 246-247. Sludge removal will potentially result in an increase in radioactive air emissions. A Notice of Construction (NOC), which will be prepared by the FH Project Team, is required prior to the start of construction activities for sludge storage at T Plant. A new NOC is not required for new K

Basin activities under CERCLA, but for each new activity the design authority shall: (1) verify (in accordance with 40 CFR 61, Subpart H, and WAC 246-247) that the increased emissions will not contribute to a combined operations at the Hanford site that exceeds 10 mrem/yr effective dose equivalent to the hypothetical offsite maximally exposed individual; (2) develop a plan to verify compliance through continuous or periodic confirmatory sampling; and (3) ensure application of the of best available radionuclide control technology (BARCT) to control radioactive emissions.

The Sludge Handling System shall be designed for zero leakage to surface or ground waters. There shall be no contaminated liquid effluent streams from the process. Environmental permits will be identified and obtained by the FH Project Team.

The Sludge Handling System air emissions shall be minimized. Filtration shall be in place on system venting to maintain emissions ALARA (WAC 246-247).

6.3. SAFEGUARDS AND SECURITY

Upon exiting the K Basins, the sludge will be classified as RH-TRU waste (Loscoe, 1999). The safeguards category of the sludge will be IV and the attractiveness level may be either E or D depending on the measured Pu content of each particular container (see DOE M 474.1-1). The Sludge Removal project, A.13(a), is responsible for the measurement of the Pu content of the sludge prior to the sludge exiting the K Basins. Acceptance of the sludge into the T Plant Material Balance Area (MBA) will not require a separate Pu measurement.

6.3.1. Safeguards

T Plant Material Balance Area (MBA) 271 is currently a Category IV MBA with physical security appropriate to that category. Based on the results of the T-Plant Sludge Security Requirements Analysis (SRA) and discussions with DOE, MBA 271 will be permitted to retain III D material without the additional security measures associated with a "limited area". Should Category II quantities of Pu be reached, however, MBA 271 would be required to meet the requirements of a "limited area". Providing MBA 271 remains a Category IV MBA, the following safeguards requirements shall be met

1. All individual sludge containers received by the Sludge Handling System from the Sludge Removal System shall have an acceptable measured accountability value as determined by the Hanford Site Measurement Control Representative. The development of the methodology to be used for this measurement is the responsibility of the shipping MBAs located in the K-Basins. Safeguards must approve the measurement method and its application (how many, where and when samples are taken, acceptable measurement variance, etc.).

2. Tamper Indicating Devices (TIDs) must be place on each individual container of sludge shipped to T-Plant. The TID must be applied immediately after filling and closing the container at K-Basins. As an alternative, the containers may be made inherently self tamper indicating by welding the container lid or other alternative technique. The use of an alternative technique will require DOE-RL concurrence.

3. Each container must be uniquely identified. This identifier must be observable and readable when stored at the K Basins or T Plant. The sludge meets the conditions for classification under DOE M 474.1-1 as retained waste.

4. Periodic physical inventories, for this MBA, will be required. The inventory frequency for this will be every two years. There is a possibility that the inventory frequency may be extended beyond the two-year requirement. The methodology as to how the inventory will be conducted will be established at a later date. However, special inventories may also be necessary to address anomalous conditions (i.e. off normal events, change of custodians, etc.). An inventory of the material will be necessary before the material is shipped off-site or processed.

5. The physical movement of the sludge to T Plant will constitute an internal transfer. As irradiated special nuclear material (SNM) only a transfer check consisting of verification of the shipping container item count, TID integrity and identification number, and verification of container identification will be required. The material will not require a receiving measurement. The transfer check by the receiving custodian at T-Plant must be completed within one day of the receipt of the shipment. Transfers must be documented on Nuclear Material Item Transfer Forms, which will then be sent to Protection Technology Hanford Safeguards for data entry to the Hanford accountability computer and reporting to the national nuclear material accountability system.

6. Procedure revisions will be required to address the change in material received and stored at the T-Plant.

7. Physical protection measures appropriate for Category IV material must be implemented. Per DOE Order 5632.1C-1, Category IV *"material shall be in a locked area when not in use"*. Additionally, per DOE RLID 473.1, a Category IV MBA requires "*industrial-grade standard pin-tumbler lock and key, automated access control device, administrative controls, or a combination of these methods*" for access control.

8. Personnel require no clearance for unescorted access to Category IV material, unless otherwise specified by a site vulnerability assessment. This generally occurs only in exceptional situations.

If the quantity of all Attractiveness Level D material remains under 16 kg of Pu, the MBA will remain at Category IV and no additional action is anticipated. If the 16 Kg limit on D material containers is exceeded, the following additional protection and administrative measures associated with the creation of a "limited area" may be necessary:

1. DOE Order 5632.1C-1 states that Category III "*material shall be stored, at a minimum, within a Limited Area and secured within a locked security container locked room.*"

2. The container or locked room containing the material shall be under the protection of an intrusion detection system or protective patrol at intervals not to exceed eight hours.

3. DOE Order 5632.1C-1 also states that " *Validation of the identity and access authorization (level of security clearance) of persons allowed access shall be administered by protective personnel (e.g., protective force or other appropriately authorized personnel) and/or automated systems and shall be accomplished at the Limited Area entrance(s).*"

4. Personnel who would access the Limited Area unescorted require, as a minimum, an "L" clearance. Individuals without a security clearance require an escort with at least an "L" clearance for access.

5. A deviation to physical security measures may be necessary.

6. Items greater than 0.2 weight percent plutonium (Attractiveness Level D material) must be stored in non-adjacent locations.

7. Access to the storage location information will be restricted.

8. The plant crane must be disabled when not in use.

9. Door locks will be enhanced.

10. T Plant vehicular access doors will be blocked.

11. Frequency of patrol checks will increase.

6.3.2. Security

The T Plant facility complex is a limited access facility. Guards staffing barricades on the Hanford Site maintain security. Means of ensuring that the sludge containers are not altered during storage (e.g., container tamper indicating devices, limited personnel access to the canyon) shall be provided.

If material with attractiveness level "D" is received, locked gates/doors shall be required during off-shift hours, and administrative access controls shall be required on shift. Locks shall employ an industrial grade pin and tumbler or an automatic access control device.

6.4. NATURAL FORCES CRITERIA

Any new facilities should comply with the load criteria defined in DOE Order 6430.1A, and shall meet the requirements of DOE 5480.28 as defined by the provisions of Chapter 1, *Structural Analysis and Evaluation Criteria* (Conrads, 1996).

The natural forces criteria for Performance Category 3 as specified in HNF-PRO-097, *Engineering Design and Evaluation*, Rev. 0, shall be applied for modification work in T Plant. The natural forces criteria specified in the K Basins/CVD S/RIDS (Dechter, 1997) should be applied for modification work in the K Basins buildings only.

6.5. DESIGN FORMAT

The design format shall be as outlined in HNF-PRO-1819, *Engineering Program.* Traceability shall be provided between project drawings and the reference drawings from which they were developed. Drawing data sets shall be provided in the latest version of Autocad®.

6.6. QUALITY ASSURANCE

6.6.1. Quality Assurance Requirements

Contractors performing design, construction, or operation activities shall be subject to Title 10 CFR, Part 830.120 (10 CFR 830.120), *Quality Assurance (QA) Requirements*, and the enforcement actions under 10 CFR 820, *General Statement of Enforcement Policy.*

Contractors involved in design, construction, and operation shall have a documented QA Program Plan that meets the appropriate requirements of HNF-MP-599, *Project Hanford QA Program Description*, Part 2, Sections 1 – 10. This document is the Hanford Site implementation document for 10 CFR 830.120, *Quality Assurance.*

Application of QA requirements shall be applied to items and activities using a graded approach as defined in HNF-PRO-259, *Graded Quality Assurance*, and HNF-PRO-704, *Hazards and Accident Analysis Process.*

Existing pre-established QA Programs - SNF-4948, *SNF Project QA Program Plan*, and HNF-SD-WM-QAPP-036, *Waste Management Quality Assurance Program Plan* – shall apply to specific tasks within this project.

Where applicable or when outside contracting sources provide design, fabrication, or construction activities, work shall be performed in accordance with an approved QA program and implementing procedures that meet the requirements of ASME NQA-1 (1994), Basic requirements 1 – 18, as applicable for their task. When subcontracting any portion of the contracted work, the seller shall pass down all applicable requirements to the sub-tier contractor.

6.7. DECONTAMINATION AND DECOMMISSIONING

All equipment and/or facilities provided by this project shall be designed and constructed to facilitate periodic decontamination, as well as eventual final decontamination and decommissioning (D&D). The design shall consider features to minimize the migration of contamination from the cells/pool during the removal of sludge containers from storage locations.

The sludge containers shall be single use containers.

All equipment used in contaminated areas and power module enclosures must be able to withstand decontamination when wiped with cloths dampened by water, soap, alcohol, or other non-hazardous materials.

Final D&D of the Sludge Handling System is not included in the scope of this project other than to ensure consideration is given to the ease of removing sludge from containers and decontamination and disposal of containers.

6.7.1. DOE REGULATIONS

Guidance for equipment design to facilitate eventual decommissioning and disposal should be obtained from DOE Order 6430.1A, Sections 0205 and 1300-11, and DOE Order 5820.2A, Chapter V.

6.7.2. MISCELLANEOUS DESIGN FEATURES

Particular care must be exercised to ensure that components do not create crevices that could trap contamination and sludge. It is essential to eliminate inaccessible pockets, crevices, blind holes, and rough surfaces that could trap contamination.

The design and material selection shall include features that facilitate decommissioning of equipment and the facility [10 CFR 835.1002(d)]. Particular attention shall be paid to any equipment in high and very high radiation areas that may exist at the end of the facility's life.

The system shall be designed to minimize hazardous and mixed waste generation and use of hazardous materials during construction, operation, and decontamination/ decommissioning. Materials used that are hazardous, or likely to be designated hazardous or mixed waste at disposal, shall be documented on drawings or other design media as appropriate.

6.8. OPERATING PERSONNEL AND SERVICES

Operation of the Sludge Handling System will require operators, maintenance personnel, truck drivers, radiological control technicians, and supervision. Support will be required from engineering, safety, and administrative personnel.

Operation of the Sludge Handling System is not anticipated to present any significant safety or environmental risks under routine operation or maintenance.

The design and material selection shall include features that facilitate the operation of equipment and the facility [10 CFR 835.1002 (d)].

6.9. TESTING

Testing confirms the adequacy of design, the quality of construction and manufactured components, operability and maintainability, and reliability.

All equipment must be subjected to testing such that its functionality and reliability can be established before placing it in a contaminated environment. Testing shall verify that all control component replacement and maintenance features can be operated as intended. Familiarization and training of operator personnel shall also be done before installation in a contaminated environment. Mock-up training is required by the *Project Hanford Radiological Control Manual* (HNF-5173) and 10 CFR 835 for certain complex, first time, or high dose jobs. This "Mock-up" training shall closely resemble the field conditions expected to be encountered. Equipment debugging in a contaminated environment is prohibitively difficult and is not compatible with minimum personnel radiation exposure. Certain test procedures, such as weld inspection, may be conducted at the vendor's site and/or at Hanford. On-site acceptance testing shall be required for each major monitoring and control system.

The verification matrix shall be completed by the Design Agent and shall identify tests, analyses, and inspections to verify that all requirements of this specification have been achieved. Tests shall be arranged in logical order for sequential performance. More than one verification method for a requirement may be required.

Depending on the Safety Designation of the construction or fabrication, Mill Certifications for materials, Certificates of Compliance, weld maps, nondestructive examination (NDE) of welds (visual, dye penetrate, magnetic particle, ultrasonic, radiographic) of 10 to 100 percent of the welds may be requested. Welder certifications shall be required for safety class welds. Functional test requirements should be addressed in the Acceptance Test Procedures (ATP) and Operability Test Procedures (OTP). Procedures and training plans shall be required.

The Project ATP and OTP shall address testing requirements. Design and Specification reviews, followed by QA verification activities during equipment procurement, fabrication, and installation should validate proper layout, material selection and qualification testing.

As required by HNF-PRO-1622, the radiological design review team shall review testing procedures that involve radiological aspects prior to testing.

7.0 STANDARDS AND REQUIREMENTS

The Sludge Handling System shall be designed and constructed to the standards and requirements described in Sections 1 through 6 of this document, which were based on the Environment, Safety and Health directives/requirements found in the following documents:

- For design of the system prior to sludge receipt at T Plant, the *K Basins S/RIDS*, WHC-SD-SNF-RD-001 (Watson 1997).

- For design of the system during sludge receipt and storage in T Plant, the *Waste Management Hanford S/RIDS*, HNF-SD-MP-SRID-011 (York 1999).

Specific federal regulations, DOE Orders, Hanford procedures, and national consensus codes and standards that should be considered in the design and construction of the Sludge Handling System are listed in the following sections. This list is not intended to be inclusive of all pertinent requirements, but rather to provide a list of the requirements that are expected to be of use in the design process.

7.1. FEDERAL AND STATE REGULATIONS

The following federal and state regulations should be considered in the design and fabrication of the Sludge Handling System.

Table 7-1. Applicable Federal and State Regulations

CFR Citation	Title
10 CFR 830.120	*Quality Assurance*
10 CFR 835	*Occupational Radiation Protection*
29 CFR 1910	*Occupational Safety and Health Standards*
29 CFR 1926	*Safety and Health Regulations for Construction*
40 CFR 61	*National Emission Standards for Hazardous Air Pollutants*
40 CFR 261	*Identification and Listing of Hazardous Waste*
40 CFR 264	*Standards for Owners and Operators of Hazardous Waste Treatment, Storage, and Disposal Facilities*
40 CFR 265	*Interim Status for Owners and Operators of Hazardous Waste Treatment, Storage, and Disposal Facilities*
40 CFR 761	*Toxic Substances Control Act*
WAC 173-303	*Dangerous Waste Regulations*
WAC 246-247	*Radiation protection – Air Emissions*

7.2. DOE ORDERS

The following DOE Orders should be considered in the design and fabrication of the Sludge Handling System.

Table 7-2. Applicable DOE Orders

Order Number	Title
DOE Order 414.1	*Quality Assurance*
DOE Order 420.1	*Facility Safety*
DOE Order 440.1	*Worker Protection Management for DOE and Contractor Employees*
DOE Order 5400.5	*Radiation Protection of the Public and the Environment*
DOE Order 5480.21	*Unreviewed Safety Questions*
DOE Order 5480.22	*Technical Safety Requirements*
DOE Order 5480.23	*Nuclear Safety Analysis Reports*
DOE Order 5480.24	*Nuclear Criticality Safety*
DOE Order 5480.28	*Natural Phenomena Hazards Mitigation*
DOE Order 5480.7A	*Fire Protection*
DOE Order 5820.2A	*Radioactive Waste Management*
DOE Order 6430.1A	*General Design Criteria*
DOE Standard 1066-99	*Fire Protection Design Criteria*
DOE-RLID 420.1	*Fire Protection*

7.3. HANFORD PLANS AND PROCEDURES

The following Hanford Procedures should be considered in the design and fabrication of the Sludge Handling System.

Table 7-3. Hanford Procedural Requirements

Plan or Procedure Number	Title
	Construction Program
HNF-PRO-1999	*Construction Program Conceptual Phase*
	Engineering
HNF-PRO-097	*Engineering Design and Evaluation*
HNF-PRO-244	*Engineering Data Transmittal Requirements*
HNF-PRO-349	*Fire Protection Design/Operations Criteria*
HNF-PRO-350	*Fire Hazards Analysis Requirements*
HNF-PRO-360	*Fire Protection/Prevention for Construction, General Occupancy, and Demolition Activities*
HNF-PRO-440	*Engineering Document Change Control Requirements*
HNF-PRO-709	*Preparation and Control Standards for Engineering Drawings*
HNF-PRO-1819	*PHMC Engineering Requirements*

Table 7-3. Hanford Procedural Requirements

Plan or Procedure Number	Title
Environmental Protection	
HNF-PRO-450	*Air Quality – Radioactive Emissions*
HNF-PRO-455	*Solid Waste Management*
HNF-PRO-3152	*Chlorinated Biphenyl Management*
Fire Protection	
HNF-PRO-340	*Fire Protection Overview and Responsibilities*
HNF-PRO-349	*Fire Protection Design/Operations Criteria*
HNF-PRO-350	*Fire Hazard Analysis Requirements*
HNF-PRO-351	*Fire Protection System Testing/Inspection and Maintenance*
HNF-PRO-356	*Controlling Hotwork*
HNF-PRO-360	*Fire Protection/Prevention for Construction, General Occupancy, and Demolition Activities*
Information Resources	
HNF-PRO-2778	*Information Resource Management*
Occupational Safety and Health	
HNF-PRO-074	*Safety Responsibilities*
HNF-PRO-088	*Electrical Work Safety*
HNF-PRO-089	*Electrical Installation Safety*
HNF-PRO-091	*Walking/Working Surfaces*
HNF-PRO-092	*Fall Protection*
HNF-PRO-093	*Elevating Work Platforms*
HNF-PRO-094	*Portable Ladders*
HNF-PRO-095	*Scaffolding*
HNF-PRO-096	*Material Handling and Storage*
HNF-PRO-100	*Transportation Safety*
HNF-PRO-102	*Safety Color Coding*
HNF-PRO-577	*Concrete and Masonry Construction*
Nuclear and System Safety	
HNF-PRO-334	*Criticality Safety: General, Requirements*
HNF-PRO-430	*Safety Analysis Program*
HNF-PRO-517	*Safety Analysis Program Glossary*
HNF-PRO-537	*Criticality Safety Control of Fissionable Material*
HNF-PRO-539	*Criticality Safety Evaluations*
HNF-PRO-700	*Safety Analysis and Technical Safety Requirements*
HNF-PRO-702	*Safety Analysis Process – Facility Change or Modification*
HNF-PRO-704	*Hazard and Accident Analysis Process*
Radiation Protection	
HNF-5173	*Project Hanford Radiological Control Manual*
HNF-PRO-1621	*ALARA Design Review*
HNF-PRO-1622	*Radiological Work Planning Process*
HNF-SP-1145	*Fluor Hanford Radiation Protection Program, Implementation of Title 10, Code of Federal Regulations, Part 835*

Table 7-3. Hanford Procedural Requirements

Plan or Procedure Number	Title
Quality Assurance	
HNF-MP-599	*Quality Assurance Program Description*

7.4. NATIONAL CONSENSUS STANDARDS

In addition to the items listed above, "National Consensus" codes and standards and pertinent state and local codes and standards should be used as applicable. The latest edition/revision of all codes, standards, and manuals that are in effect at the start of the conceptual design shall be used.

Table 7-4. National Consensus Standards

Standard Number/ Reference	Title
American Concrete Institute, Detroit, Michigan	
ACI-301-89	*Specifications for Structural Concrete for Buildings*
ACI-318-89/318R-89	*Building Code Requirements for Reinforced Concrete and Commentary*
American National Standards Institute, New York, New York	
ANSI A13.1	*Scheme for the Identification of Piping Systems*
ANSI C2	*National Electric Safety Code*
ANSI/AWS D1.1	*Structural Welding Code-Steel*
ANSI/AWS D1.2	*Structural Welding Code-Aluminum*
ANSI/AWS D9.1	*Structural Welding Code-Sheet Metal*
ANSI/AWS D14.1	*Specification for Welding of Industrial and Mill Cranes and Other Material Handling Equipment*
ANSI C84.1	*Electric Power Systems and Equipment - Voltage Ratings* (60 Hertz)
American Society of Civil Engineers, Reston, Virginia	
ASCE 7-93	*Minimum Design Loads for Buildings and Other Structures*
American Society of Mechanical Engineers, New York, New York	
ASME B31.1, 1995 ASME Boiler and Pressure Vessel Code	*Power Piping*
ASME Section VIII, 1995 ASME Boiler and Pressure Vessel Code	*Boiler and Pressure Vessel Code, Rules for Construction of Pressure Vessels*
ASME Section IX, 1995 ASME Boiler and Pressure Vessel Code	*Qualification Standard for Welding and Brazing Procedures, Welders, Brazers, and Welding and Brazing Operators*
American Welding Society, Miami, Florida	
AWS QC-1	*Guide to AWS Welding Inspector Qualifications and Certification*

Table 7-4. National Consensus Standards

Standard Number/ Reference	Title
Institute of Electrical and Electronics Engineers, New York, New York	
IEEE 829	*IEEE Standard for Software Test Documentation*
IEEE 1008	*IEEE Standard for Software Unit Testing*
IEEE 1012	*IEEE Standard for Software Verification and Validation Plans*
IEEE 1016	*IEEE Recommendation Practice for Software Design Descriptions*
IEEE 336	*Standard Installation, Inspection, and Testing Requirements for Power, Instrumentation, and Control Equipment at Nuclear Facilities*
IEEE 1008	*Standard for Software Unit Testing*
IEEE 1012	*Standard for Software Verification and Validation Plans*
IEEE 1016	*Recommended Practice for software Design Descriptions*
IEEE 829	*Standard for Software Test Documentation*
Illuminating Engineering Society of North America, New York, New York	
IES, Eighth Edition	*Lighting Handbook Reference and Application*
Instrument Society of America, Research Triangle Park, North Carolina	
ISA S5.1, 1984/92	*Instrument Symbols and Identification*
ISA S5.4	*Instrument Loop Diagrams*
ISA S18.1, 1979/92	*Annunciator Sequences and Specifications*
ISA S50.1	*Compatibility of Analog Signals for Electronic Industrial Process Instruments*
ISA S82.01	*Safety Standard for Electrical and Electronic Test, Measuring, Controlling and Related Equipment - General Requirements*
ISA S82.02	*Safety Standard for Electrical and Electronic Test, Measuring, Controlling and Related Equipment - Electrical and Electronic Test and Measuring Equipment*
ISA S82.03	*Safety Standard for Electrical and Electronic Test, Measuring, Controlling and Related Equipment - Electrical and Electronic Process Measurement and Control Equipment*
ISA S5.1	*Instrumentation Symbols and Identification*
ISA S5.4	*Instrument Loop Diagrams*
ISA S18.1	*Annunciator Sequences and Specifications*
ISA S50.1	*Compatibility of Analog Signals for Electronic Industrial Process Instruments*
ISA S82.01	*Safety Standard for Electrical and Electronic Test, Measuring, Controlling, and Related Equipment - General Requirements*
ISA 82.03	*Safety Standard for Electrical and Electronic Test, Measuring, Controlling, and Related Equipment - Process Measurements and Control Equipment*
International Conference of Building Officials, Whittier, California	
UBC	*Uniform Building Code*
International Fire Code Institute, Whittier, California	
UFC	*Uniform Fire Code*
National Electrical Manufacturers Association, Washington D. C.	

Table 7-4. National Consensus Standards

Standard Number/ Reference	Title
NEMA MG-1	*Motors and Generators, Standards Publication*
National Fire Protection Association, Quincy, Massachusetts	
NFPA 13	*Standard for Installation of Sprinkler Systems*
NFPA 14	*Standard for Installation of Standpipe and Hose Systems*
NFPA 70	*National Electric Code*
NFPA 72	*National Fire Alarm Code*
NFPA 101	*Safety to Life in Buildings and Structures*
NFPA 801	*Standard for Facilities Handling Radioactive Materials*
Electrical Council of Underwriters Laboratories, Northbrook, Illinois	
UL 508	*Standard for Safety Industrial Control Equipment*

8.0 REFERENCE DRAWINGS

The following reference drawings should be used, as applicable, for the design of the Sludge Handling System. It should be noted that the list below is not intended to be inclusive, and it is expected that the design agent will identify additional engineering documents and drawings.

Table 8-1. Baseline Drawings

Drawing Number	Drawing Title
H-1-81167	*SNF Project KE Basin Sludge Removal Level 1 PFD*
H-1-81535, sheets 1-6	*TN-WHC Cask Transportation System*
H-1-81539, sheet 1	*TN-WHC Cask Transportation System Tie Down System*
H-2-88633, sheets 2 - 23	*T Plant Structural Concrete Sections and Details*
H-2-33099	*Typical Cross Sections*
W 69332	*Hanford Engineering Works Building 221-T-U-B, Concrete Covers*
W 69333	*Hanford Engineering Works Building 221-T-U-B, Sections 1 and 2 Concrete Sections and Details*
W 69334	*Hanford Engineering Works Building 221-T-U-B, Sections 1 and 2 Concrete Plans and Details*
W 69565	*Hanford Engineering Works Building 221-T-U-B, Standard Section Concrete Plans*
W 69566	*Hanford Engineering Works Building 221-T-U-B, Concrete Sections and Details*
W 70064	*Hanford Engineering Works Building 221-T-U-B, Structural Key Plan*
See SD-WM-EDL-001*	*T Plant - Electrical*
See SD-WM-EDL-001*	*T Plant - Fire Protection*
See SD-WM-EDL-001*	*T Plant - Piping*
See SD-WM-EDL-001*	*T Plant - Ventilation*
See SD-WM-EDL-001*	*T Plant - Cranes*
See SD-WM-EDL-001*	*T Plant - Instrumentation*

*Reference drawings for T Plant can be found in SD-WM-EDL-001, *T Plant Essential and Support Drawing List* (Whitlock, 1999). All of the drawings listed in this document are applicable to the T Plant Canyon with the *exception* of the following:

- H-2-826548, sheets 1 - 2
- H-2-826549, sheets 1 - 2
- H-2-826550, sheets 1 - 6
- H-2-826551, sheets 1 - 2
- H-2-826566, sheet 1
- H-2-826574, sheets 1 - 22
- H-2-826586, sheet 1
- H-2-826588, sheet 1-3
- H-2-826592, sheet 1
- H-2-826593, sheets 1-2
- H-2-78265, sheet 1
- H-2-82957, sheet 1
- H-2-88615, sheet 2
- H-2-818221, sheet 6

9.0 REFERENCES

Ames, R. R., 2000, *Criteria Document for the Sludge Storage at T Plant Safety Assessment*, HNF-6035, Fluor Hanford, Inc., Richland, Washington.

ASME, 1995b, *Boiler and Pressure Vessel Code*, Section VIII, Division 1, American Society of Mechanical Engineers, New York, New York

Baker, R. B., 2000, *Observations of K Basin Sludge Behavior in Relation to Sludge Container Design and Storage*, HNF-6705, Revision 0, Fluor Hanford, Inc., Richland, Washington.

Bergsman, K. H., 1996, *Spent Nuclear Fuel Dose Management Plan*, WHC-SD-SNF-SP-010, Revision 0, Westinghouse Hanford Company, Richland, Washington.

CSB Expert Panel, 1999, *Conclusions of Expert Panel on Analysis for Eccentric MCO Drops at CSB September 15, 1999, Richland, WA*, Canister Storage Building, SNF Project, Fluor Hanford, Richland, Washington

Dechter, S. J., 2000, *K Basins Standards/Requirements Identification Document*, HNF-SD-SNF-RD-001, Revision 1, Westinghouse Hanford Company, Richland, Washington.

DOE-RL, 2000, *Hanford Site Hoisting and Rigging Manual*, DOE-RL-92-36, Release 18, DOE-RL, Richland, Washington

EPA, 1999, *Hanford Site – 100 Area (USDOE) 100-KR-2 Operational Unit*, EPA 541-R99-039, Environmental Protection Agency, Richland, Washington.

Erickson, D. G., 2000, *Preliminary Criticality Study for K Basin Sludge Containers at T Plant*, HNF-6435, Revision 0, Fluor Federal Services, Richland, Washington.

Erpenbeck, E. G., 2000a, *Seismic Evaluation of the T Plant 221-T Building for Interim Sludge Storage of K Basins Sludge*, HNF-6033, Revision 0, Fluor Hanford, Inc., Richland, Washington.

Erpenbeck, E. G., 2000b, *Gas and Heat Generation Analysis of K Basin Sludge for Storage at T Plant*, HNF-6704, Revision 0, Fluor Hanford, Inc., Richland, Washington.

Erpenbeck, E. G., 2000c, *Structural Design Concepts for Seismic Upgrades to the 221-T Pool*, HNF-7150, draft, Fluor Hanford, Inc., Richland, Washington.

Harp, B. J., 1997, *T Plant Master Equipment List*, HNF-SD-WM-EL-007, Revision 0, Waste Management Hanford, Richland, Washington.

Hill, B. R., 2000, *Quality Assurance Program Description*, HNF-MP-599, Revision 4, Fluor Hanford, Inc., Richland, Washington.

Himes, D. A., 2000, *Preliminary Accident Analysis for Storage of K Basin Sludge in T Plant*, Fluor Hanford, Inc., Richland, Washington.

Keene, 2000, *Fire Hazards Analysis for T Plant Complex*, WHC-SD-CP-FHA-002, Revision 1, Fluor Hanford Company, Richland, Washington.

Loscoe, P. G., 1999, *Contract No. DE-AC06-96RL13200 – K Basins Sludge Classification*, Letter 00-SFO-043, Department of Energy, Richland Operations Office, to R. D. Hanson, Fluor Daniel Hanford, Richland, Washington.

Mertz, D. W., 2000, *Fire Hazards Analysis for K Basins Facilities at the 100K Area*, SNF-SD-SNF-FHA-001, Rev. 1, DynCorp Tri-Cities Service, Inc., Richland, Washington.

Mills, W. C., 1995, *K-Basins Design Guidelines*, WHC-SD-SNF-DGS-001, Rev. 0, Westinghouse Hanford Company, Richland, Washington

NRC, 1984, *Clarification of Conditions for Waste Shipments Subject to Hydrogen Gas Generation*, SSINS No. 6835, Information Notice 84-72, U.S. Nuclear Regulatory Commission, Washington, D.C.

NRC, 2000, *Packaging and Transportation of Radioactive Material*, 10 CFR 71, U.S. Nuclear Regulatory Commission, Washington, D.C.

Pearce, K. L., (TBI), *Sludge Technical Data Book*, HNF-SD-TI-015, Volume 2, Revision 0, Fluor Hanford, Richland, Washington.

Pearce, K. L., and S. C. Klimper, 2000, *105-K Basin Material Design Basis Feed Description for Spent Nuclear Fuel Project Facilities*, Volume 2, *Sludge*, HNF-SD-SNF-TI-009, Rev. 2, Fluor Hanford Company, Richland, Washington.

Peck, S. H., 2000, *Criteria Document for the Safety Assessment of Sludge and Debris Removal from K Basins*, SNF-6559, draft, Fluor Hanford, Inc., Richland, Washington.

Peterson, C. A., 2000, *K Basin Sludge Heat and Gas Generation Scoping Study*, HNF-6250, Revision 0, Fluor Hanford, Richland, Washington.

Precechtel, D. R., 2000, *Functional Design Criteria for the K Basins Sludge Loadout System – Project A.13*, HNF-SD-SNF-FDC-006, Revision 2, Fluor Hanford, Richland, Washington.

Schultz, M. V., 2000, *Hazard Evaluation for Storage of Spent Nuclear Fuel Sludge at the Solid Waste Treatment Facility*, HNF-6527, Revision 0, Fluor Federal Services, Richland, Washington.

Smith, R. J., 2000, *Safety Analysis Report for Packaging (Onsite) Multi-Canister Overpack Cask*, HNF-SD-TP-SARP-017, Revision 2, Waste Management Technical Services for Fluor Hanford, Richland, Washington

Whitlock, R. W., 1999, *T Plant Essential and Support Drawing List*, HNF-SD-WM-EDL-001, Revision 4, Waste Management Federal Services of Hanford, Inc., Richland, Washington.

Yanochko, R. M., 1999, *Functions and Requirements for the Transition Project,* SNF-4961, Revision 0, Fluor Daniel Hanford Company, Richland, Washington.

York, M. F., 1999, *Waste Management Hanford Standards/Requirements Identification Document*, HNF-SD-MP-SRID-011, Rev 1, Waste Management Hanford, Richland, Washington.

APPENDIX A

T PLANT FACILITY DESCRIPTION

A.1 PHYSICAL DESCRIPTION OF 221-T

The 221-T building is made of reinforced concrete, is 259 m long, 20.7 m wide, and 22.6 m high (850 ft by 68 ft by 74ft), and covers an area of 5,370 m^2 (57,800 ft^2). The building consists of the canyon, three galleries (operating, pipe, and electrical), one craneway, and a "head-end" facility.

A.1.1 Canyon Service Area (Canyon Deck and Railroad Tunnel).

The canyon service area consists of 37 cells and one railroad tunnel entrance/exit. The cells are grouped into 12.2-m (40-ft) sections arranged in a single row running the length of the building. Each 12.2-m (40-ft) section is numbered according to building section number and consists of two cells, one designated right (R) and one left (L). In the past, the cells were numbered from 1 to 40, starting in the North end of the building. This convention is now rarely used. All cells, except 2R, 5R, and the head-end cells, are 5.38 m long, 3.96 m wide, and 8.53 m deep (17 ft 8 in. by 13 ft by 28 ft). Each left and right pair is separated from the neighboring cell pair by a 2.13-m (7-ft) thick reinforced-concrete wall. All cell floors except 5R slope to one corner, where drains lead to a radioactive drain line running the length of the building. The radioactive drain line empties into the 5-7 tank in cell 5R. The canyon deck is about 12.2 m (40 ft) below a 0.91 to 1.23-m (3 to 4-ft) thick concrete roof.

Shielding walls made of 2.74-m (9-ft) thick reinforced concrete separate the cells from the electrical and pipe galleries. The operating gallery is separated from the canyon deck by a 2.13-m (7-ft) thick reinforced concrete wall. A 1.52-m (5-ft) thick concrete wall that extends 2.74 m (9 ft) above the floor level protects the crane cab. Most of the cells are covered by four, 1.83-m (6-ft) thick, reinforced-concrete blocks. Each block is stepped to eliminate a direct path for radiation shine. Cover blocks for cells 11R, 13R, and 15R are 0.61 m (2 ft) thick and are covered with a 0.95 cm (3/8 in.) thick stainless steel decontamination pad. Each cover block has a carbon steel lifting bail to allow access into the cells.

The railroad tunnel used for transporting equipment into and out of the canyon enters the plant at cell 2L (section 2). A 4.88-m wide by 6.71-m high (16 ft by 22 ft) opening, covered by a motor-driven rolling steel door, provides railroad canyon access from outside.

A.1.2 T Plant Pool

Cell 2R of Section 2 was designed as a pool. Small cracks in the pool cell have been sealed from the railroad tunnel side to prevent water leakage and ensure seismic integrity. The pool is 3.96 m wide by 8.38 m long by 8.53 m deep (13 ft by 27 ft 6 in. by 28 ft) with a capacity of about 189,000 L (50,000 gal). A catwalk only a few inches above the highest pool water level allows access to the pool for sampling and maintenance. Two coverblocks extend from the east-end of the cell over the fuel assemblies. The west-end of the cell is left open to facilitate surveillance and maintenance of the pool water and fuel and to minimize stress on the cell walls. The catwalk and other equipment associated with the fuel pool is located west of the coverblocks.

An ion-exchange column recirculating system is used for pool water purification. The resin column is made of 0.95-cm (3/8-in.) thick stainless steel and is enclosed behind 0.305 m (1 ft) thick concrete barriers to limit personnel exposure to 5 mrem/h above canyon background.

A.1.3 Entry and Exit Doors

Several entry and exit doors are located throughout the canyon area. The main canyon entry door is located in section 20. The rear canyon "R" doors are normally used for emergency exit only, except for R-19, which is used for access to the laundry storage area and a canyon viewing room or "bubble" at section 13. Access to the bubble is made through the canyon or the outside R-13 entrance.

A.1.4 Crane

T Plant has one electrically operated, overhead, traveling, bridge crane with an original capacity of 68.1 metric tons (75 tons). The capacity of this crane has since been downgraded to 40.8 metric tons (45 tons). The crane moves parallel to the canyon, allowing easy access to the canyon deck area. The crane maintenance platform located in section 20 allows hands-on crane inspection and maintenance.

The 40.8 metric-ton (45-ton) capacity canyon crane is operated by use of periscopes and a remote video camera from a crane cab that is shielded by a parapet and 10.2-cm (4-in.) thick lead walls. In addition, a remote video system is available. Other remote equipment includes a 9.08 metric ton capacity hoist with a rotary hook that provides adaptability for handling, positioning, and maneuvering functions; a left and right 0.91 metric-ton (1 ton) capacity auxiliary hoist; an impact wrench; a clam bucket; and an auxiliary impact wrench. An additional 9.1 metric-ton (10 ton) capacity crane is normally operated from the canyon deck by use of a suspended control box that hangs from the crane assembly. This crane can also be operated from the crane cab on the crane bridge.

A.1.5 Cells

The standard canyon cells are normally covered by four, 1.83-m (6-ft) thick, concrete cover blocks. All lines that service the cells are encased in concrete and terminate in a row of connector flanges on the cell wall 2.74 m (9 ft) below canyon deck level. In some instances, process lines go directly through the wall to the adjacent cell in the same section. Because there are expansion joints between sections of the building, there are no direct through-the-wall connections from section to section; however, all intra-cell liquid transfers are made through jumpers within the cells. Inter-section liquid transfers are made through an 2.44 m wide by 3.20 m deep (8 ft by 10 ft 6 in.) pipe trench that runs almost the entire length of the canyon. The trench is covered by a series of 1.37 m (4 ft 6 in.) thick reinforced-concrete blocks that are stepped on the side to eliminate a path for radiation shine. All pipes in the trench are sloped to permit proper drainage.

A.1.6 Exhaust Tunnel

A 3.20-m (10 ft 6 in.) square concrete exhaust air tunnel runs parallel to the canyon and provides exhaust for the canyon cells. The tunnel exits the 221-T Building at section 3, 6.71 m (22 ft) below the deck level where it narrows to a 1.22 m by 2.13 m (4 ft by 7 ft) duct. The underground duct then runs about 61.0 m (200 ft) to the high-efficiency particulate air (HEPA) filter system that discharges to the 291-T stack exhaust system located just southeast of the 221-T Building.

A.1.7 Electrical Gallery

The electrical gallery is 232 m long and 4.27 m wide (760 ft by 14 ft). A corridor extends along the full length of the gallery and can be entered through nine stairwells. The electrical gallery contains the main electrical lines, motor control, and the electrical distribution centers for the building. The main steam lines and water lines also enter the building through this gallery.

The electrical gallery also has most of the drain system lines converging from the piping and operations galleries. The drain lines vary in size from 5.08 to 10.2 cm (2 to 4 in.) diameter pipe and are constructed of stainless steel, black iron, and PVC piping. A drain-collection tank is also located in the electrical gallery. The collection tank, which is constructed of stainless steel, transfers collected liquids from the galleries to the Liquid Effluent Treatment Facility.

A.1.8 Pipe Gallery

The pipe gallery is 232 m long and 4.27 m wide (760 ft by 14 ft). It can be entered through nine stairwells. The pipe gallery contains most of the nonradioactive chemical, process, and utility piping. The pipe gallery is divided into four areas to meet requirements for present operations. Section 2 is the location of the main power supply for the ion-exchange column. Locker rooms and a shower room are located in sections 19 and 20. The laundry dock is located off section 20. A loading dock is located adjacent to the section 17 stairwell.

All of the existing process and chemical piping in the pipe gallery is supported by the canyon wall. This piping is abandoned, isolated, and is awaiting removal and demolition. The piping runs the length of the gallery and varies in size from 2.54 cm to 20.3 cm (1 to 8 in.) diameter. The process and chemical piping was jumpered from the pipe gallery to penetrations through the canyon wall. Most of the jumpers have been removed and the penetrations capped. The abandoned 20.3 cm (8 in.) steel raw water supply pipe still has some jumpers supported by the penetrations. The two main chemical supply lines (caustic and acid) are 5.08 cm (2 in.) diameter pipes with 2.54 cm (1 in.) jumper connections. Both of these lines are stainless steel. Almost all of the canyon jumper penetrations are 2.54 and 5.08 cm (1 and 2 in.) diameter flanged connections. The raw water jumper connections are 10.2 cm (4 in.) diameter flanged connections. In addition, most of the control panel jumpers have been removed and capped at the canyon penetrations.

A.1.9 Operating Gallery

The operating gallery is approximately 232 m long and 4.27 m wide (760 ft by 14 ft). Nine stairwells provide access into the operating gallery. This gallery is the control center for remote operation of the canyon equipment. The pool control panel is located in section 3. Various control boards are located in sections 5 through 15; however, only the control panels in sections 5, 11, and 15 are in use.

Sections 16 through 19 contain offices. The office adjacent to section 19 contains panel controls for canyon air and lights. The canyon entry area and emergency decontamination shower are located in section 20.

A.1.10 Stairwells

The 221-T Building stairwells allow access to a 232 m long 3.35 m wide (760 ft by 11 ft) craneway. The craneway is a radiation area. Only the stairwells in sections11 and 13 are used for access into the craneway from the 221-T Building. The doors at the other stairwell entrances on the third floor are locked to prevent unauthorized entry, but can be used for emergency exit.

A.2 HEATING, VENTILATION, AND AIR CONDITIONING

There are two separate ventilation systems for the 221-T Building: (1) the canyon supply and exhaust system and (2) the supply and exhaust system for the galleries. The 221-T Building galleries are maintained slightly below atmospheric pressure while the 221-T Building canyon area is maintained at a greater negative pressure.

Supply air can be provided by two units that force air into a common supply plenum; however, this system is currently out-of-service. The supply fans, rated at 18.88 m^3/sec (40,000 ft^3/min) each, draw outside air in through louvered roof openings in the 221-TA Building. The air passes through air filters and an evaporative cooler before being delivered to the supply plenum.

Each of the two 221-TA Building supply fans have manual dampers that can be adjusted to regulate flow. There are also eight supply units distributed along the craneway that are capable of supplying 12.06 m^3/sec (25,500 ft^3/min) of additional air. The eight units are currently not in service and are blanked off.

The supply air is exhausted through the 291-T exhaust system through the 61.0 m (200 ft) high 291-T-1 stack.

The roof exhaust system is abandoned in place has been capped off.

The 291-T Building exhaust system consists of two fans in series (9.44 m^3/sec [20,000 ft^3/min] each) and a single fan (18 m^3/sec [40,000 ft^3/min]) in parallel that pull canyon air past the cell cover blocks down into the cells and pipe trench. The two fans in series may be operational separately or together. The single fan may be operated when the other fans are off. The air then

travels from each cell or section of the pipe trench through 25.4 cm (10 in.) diameter ceramic ducts into a 3.20 m (10 ft 6 in.) square exhaust tunnel that runs the length of the 221-T Building canyon. The exhaust air exits the 221-T Building at section 3 through a 1.22 m wide by 2.13 m high (4 ft by 7 ft) concrete duct that runs 44.2m (145 ft) to a 130 kW electrical duct heater. The air is then pulled through four parallel pre-filter housings and four walk-in two-stage HEPA filter housings.

The four parallel channels for these above-ground, insulated filter housings are rated at 4.72 m^3/sec (10,000 ft^3/min) each, with individual dampers for each channel. The four channels are recombined into a common 142 cm (56 in.) diameter steel duct and connected to the exhaust fans. The HEPA filter housings are designed to test filter integrity by aerosol testing of each filter stage individually and in combination. The pressure drop across each HEPA filter stage and the pre-filter are indicated by gauges on the filter housings. A local alarm panel provides both an audible and visual alarm upon a high differential pressure across any of the filter stages or when the duct heater is unable to maintain the set point temperature differential across the filter bank. The stack is sampled and monitored continuously for beta/gamma.

Canyon pressure during operation ranges from -0.381 to -1.27 cm w.g. (-0.15 to -0.5 in. w.g.). Pressure switches interlock the supply fans so they cannot run unless the canyon air pressure is negative. A control panel allows selection of either supply fan.

A.3 UTILITIES

Water and electrical utilities are supplied to T Plant from outside sources. Compressed air, should it be required, is supplied from the 221-T Building.

A.3.1 Water

Only raw water and sanitary water are used at the T Plant Complex. Raw water is treated to remove mud and debris before it is pumped from the 282-W reservoir. It is used at the T Plant Complex primarily for decontamination purposes and as a cooling medium. An 25.4 cm (10 in.) diameter water line enters the 221-T Building at 690 kPa (100 lb/in^2 [gauge]) at section 20 in the electrical gallery. The line then reduces to two 7.62 cm (3 in.) diameter lines. One line runs into the electrical gallery to supply water to the 221-T and 271-T Buildings. The other line enters the 221-T Building canyon at section 20 in the operating gallery. The control of this water line is maintained by diaphragm-operated valves operated by air switches on the panel in room 218, the 221-T Building operating gallery. Raw water lines are properly trapped to prevent backflow.

Sanitary water at 690 kPa (100 lb/in^2 [gauge]) enters the T Plant electrical gallery at section 20 where it is then routed throughout the operating gallery for use in the 221-T, 271-T, and 2706-T Buildings. This water is safe for human consumption and is used in lunchrooms, toilets, showers, and fire hydrants. Sanitary water lines that run through radiation areas are properly trapped to prevent any backflow from the radiation area into the sanitary water system.

A.3.2 Electrical

Electrical power is furnished to the T Plant Complex by two normal incoming power lines, E8-L2 and E8-L7. These lines feed 2,400 V to the switch gear equipment in the 221-T Building electrical gallery. From the 2,400-V switch gears, E8-L2 and E8-L7 power is fed to several 2,400-V motors, to 2,400-V/480-V transformers for power, and to 2,400-V/120-240-V transformers for lighting. The 480-V power from the transformers is distributed to cubicles in the electrical gallery where switch gear and distribution circuits for individual pieces of equipment are located. The lower voltage transformers feed lighting circuits and various small loads.

If a power failure occurs on either of the normal lines, E-L2 or E-L7, most loads can be switched to the other normal line. An auxiliary power line to T Plant is provided in the event that both normal electrical power supply lines fail. Auxiliary power is furnished by a 2,400-V, three-phase line, E8-L1 from substation 252-W.

If all power external to T Plant fails, 12-V emergency lamps are available to provide emergency lighting in various locations throughout the 221-T Building galleries, stairwells, and canyon, and in the 271-T Building stairwells.

APPENDIX I

MECHANICAL FLOW DIAGRAMS

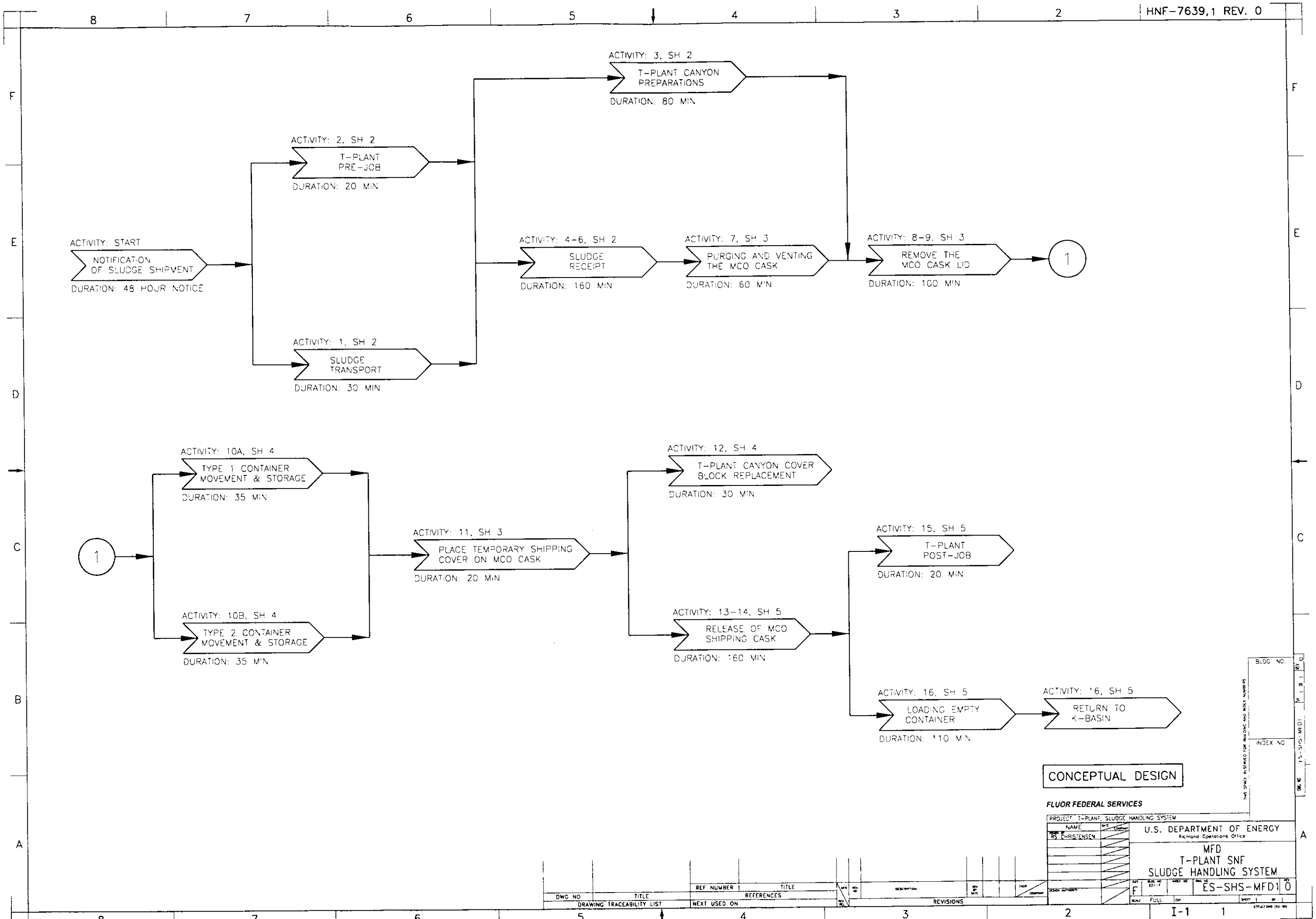
ACTIVITY: START
NOTIFICATION OF SLUDGE SHIPMENT
DURATION: 48 HOUR NOTICE
ACTIVITY: 2, SH 2
T-PLANT PRE-JOB
DURATION: 20 MIN
ACTIVITY: 1, SH 2
SLUDGE TRANSPORT
DURATION: 30 MIN
ACTIVITY: 3, SH 2
T-PLANT CANYON PREPARATIONS
DURATION: 80 MIN
ACTIVITY: 4-6, SH 2
SLUDGE RECEIPT
DURATION: 160 MIN
ACTIVITY: 7, SH 3
PURGING AND VENTING THE MCO CASK
DURATION: 60 MIN
ACTIVITY: 8-9, SH 3
REMOVE THE MCO CASK LID
DURATION: 100 MIN
1
1
ACTIVITY: 10A, SH 4
TYPE 1 CONTAINER MOVEMENT & STORAGE
DURATION: 35 MIN
ACTIVITY: 10B, SH 4
TYPE 2 CONTAINER MOVEMENT & STORAGE
DURATION: 35 MIN
ACTIVITY: 11, SH 3
PLACE TEMPORARY SHIPPING COVER ON MCO CASK
DURATION: 20 MIN
ACTIVITY: 12, SH 4
T-PLANT CANYON COVER BLOCK REPLACEMENT
DURATION: 30 MIN
ACTIVITY: 13-14, SH 5
RELEASE OF MCO SHIPPING CASK
DURATION: 160 MIN
ACTIVITY: 15, SH 5
T-PLANT POST-JOB
DURATION: 20 MIN
ACTIVITY: 16, SH 5
LOADING EMPTY CONTAINER
DURATION: 110 MIN
ACTIVITY: 16, SH 5
RETURN TO K-BASIN
CONCEPTUAL DESIGN
FLUOR FEDERAL SERVICES
PROJECT: T-PLANT, SLUDGE HANDLING SYSTEM
NAME
RS CHRISTENSEN
U.S. DEPARTMENT OF ENERGY
Richland Operations Office
MFD
T-PLANT SNF
SLUDGE HANDLING SYSTEM
ES-SHS-MFD1
0
DWG NO
TITLE
DRAWING TRACEABILITY LIST
REF NUMBER
TITLE
REFERENCES
NEXT USED ON
REVISIONS
BLDG NO
INDEX NO
THIS SPACE RESERVED FOR BUILDING AND ROOM NUMBERS

1 SLUDGE TRANSPORT

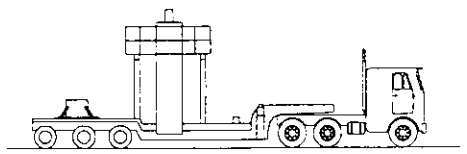

- TRANSPORTER LEAVES K-BASINS WITH SLUDGE CONTAINER IN SHIPPING CASK AND GOES TO T-PLANT

TIME MIN. 30

2 T-PLANT PREPARATIONS

PRE-JOB CONFERENCE

- T-PLANT CAN BEGIN PLANNING FOR TRANSFER OF SLUDGE WHILE IT IS IN TRANSPORT FROM K-BASINS
- T-PLANT GENERATOR SERVICES REVIEWS WASTE PROFILES AGAINST PROJECT SPECIFIC WASTE ACCEPTANCE CRITERIA
- T-PLANT ACCEPTS WASTE PROFILE SHEETS

TIME MIN. 20

3 T-PLANT CANYON PREPARATIONS

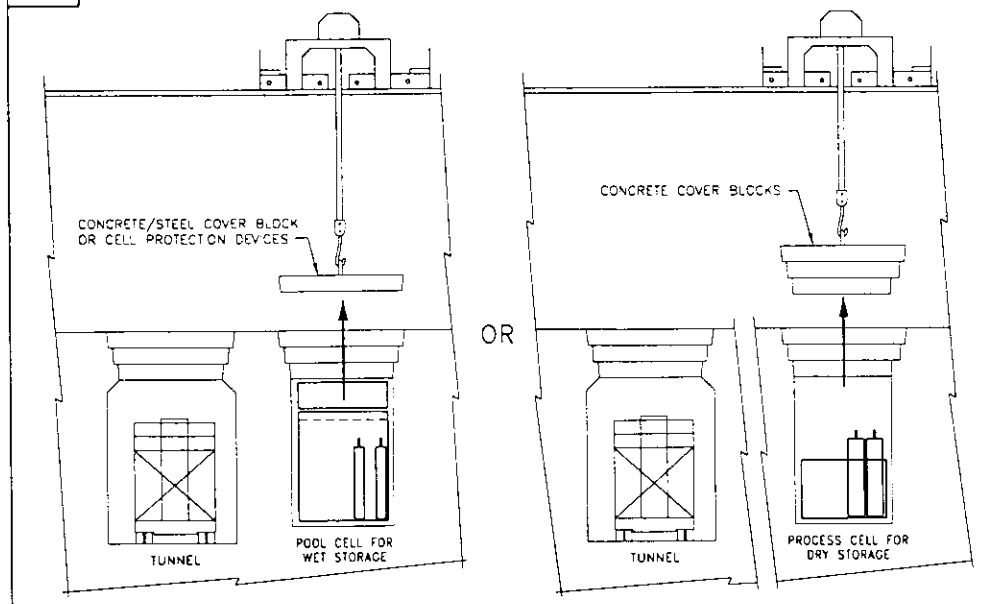

T-PLANT CANYON READINESS ACTIVITIES CAN BE PERFORMED PRIOR TO THE RECEIPT OF SLUDGE AT T-PLANT

- T-PLANT CRANE OPERATOR LOCATES AND CONNECTS LIFTING HOOK FOR COVER BLOCK
- T-PLANT CRANE OPERATOR REMOVES SPECIFIED NUMBER OF COVER BLOCKS FROM CELL AND PLACES THEM ON THE DECK

TIME MIN. 80

4 SLUDGE RECEIPT

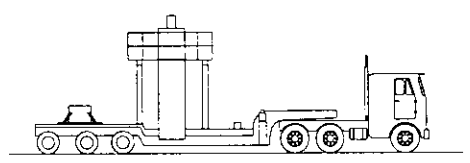

- T-PLANT ACCEPTS SHIPPING MANIFEST AND RECEIVES CASK/TRANSPORTER/CANTAINER AT 221-T TUNNEL
- T-PLANT OPERATIONS INSPECTS TRANSPORTER AND SLUDGE CONTAINER SHIPPING CASK AND T-PLANT RADIOLOGICAL PERSONNEL SURVEY/SWIPE SHIPPING CASK AND ANALYZE SWIPES
- T-PLANT OPERATIONS PERSONNEL DRESS OUT FOR CANYON ENTRY

TIME MIN. 70

5 SLUDGE RECEIPT

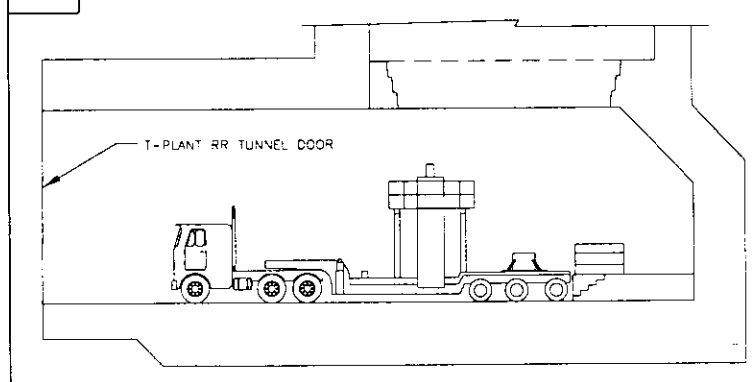

- T-PLANT OPERATIONS RAISES TUNNEL DOOR AND CASK TRANSPORT ENTERS AND BACKS DOWN THE TUNNEL

TIME MIN. 30

6 SLUDGE RECEIPT

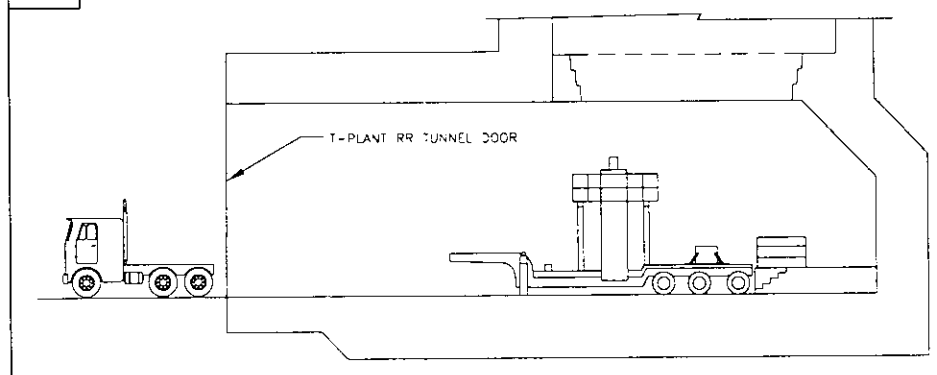

- T-PLANT OPERATIONS DISCONNECTS TRANSPORT TRUCK FROM TRAILER TRUCK PULLS OUT OF THE TUNNEL AND DOOR IS LOWERED
- T-PLANT OPERATIONS JACKS UP AND LEVELS THE TRAILER

TIME MIN. 60

CONCEPTUAL DESIGN

FLUOR FEDERAL SERVICES

PROJECT: T-PLANT, SLUDGE HANDLING SYSTEM

U.S. DEPARTMENT OF ENERGY
Richland Operations Office

MFD
T-PLANT SNF
SLUDGE HANDLING SYSTEM

ES-SHS-MFD2 0

DWG NO | TITLE | REF NUMBER | TITLE | REFERENCES | NEXT USED ON | DRAWING TRACEABILITY LIST

REVISIONS

7 PURGING AND VENTING THE CASK

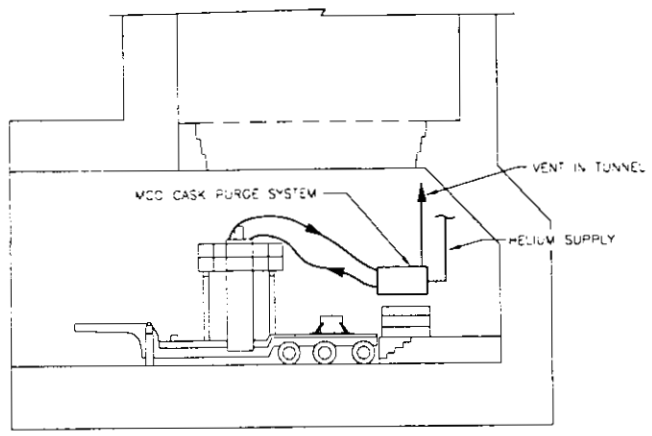

- T-PLANT OPERATIONS ATTACHES HELIUM PURGE LINES TO THE MCO CASK
- T-PLANT OPERATIONS OPENS PURGE VALVE AND ALLOWS HELIUM PURGE OF SHIPPING CASK (MINIMUM OF 1 VOLUME CHANGE) T-PLANT OPERATIONS SHUTS THE PURGE VALVE
- T-PLANT RADIOLOGICAL CONTROL VERIFIES THE ABSENCE OF RADIOACTIVE CONTAMINATION IN THE ANNULUS SPACE BETWEEN THE STORAGE CONTAINER AND THE MCO CASK VIA PURGE LINE RADIATION INDICATION
- T-PLANT OPERATIONS DETACHES PURGE LINES

TIME MIN. 60

8 REMOVING THE CASK LID

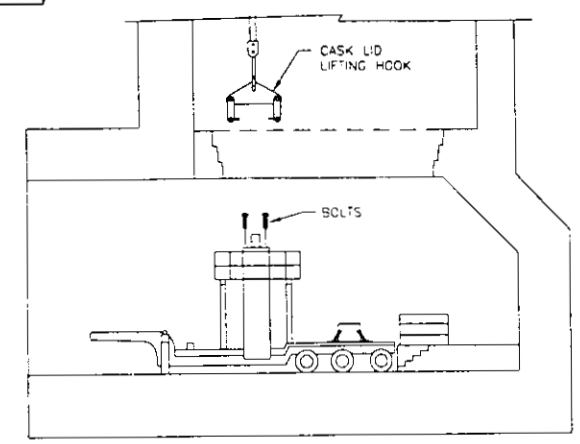

- T-PLANT OPERATIONS LOOSENS AND REMOVES MCO CASK LID BOLTS
- CRANE OPERATOR RETRIEVES CASK LID LIFTING HOOK
- T-PLANT PERSONNEL EXIT CANYON

TIME MIN. 50

9 REMOVING THE CASK LID

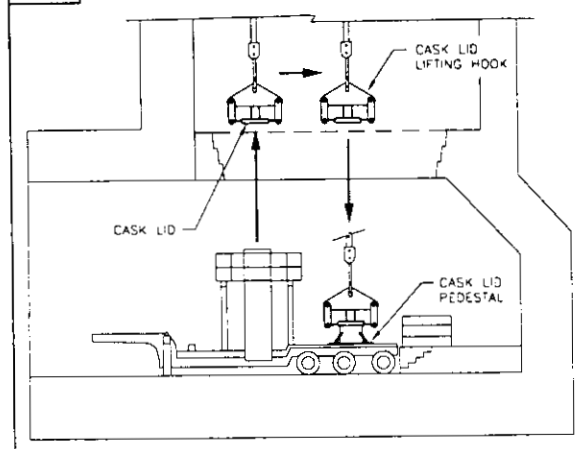

- CRANE OPERATOR REMOVES CASK LID
- CRANE OPERATOR PLACES LID ON CASK LID PEDESTAL
- CRANE OPERATOR RETURNS CASK LID LIFTING HOOK

TIME MIN. 50

CONCEPTUAL DESIGN

FLUOR FEDERAL SERVICES

PROJECT T-PLANT SLUDGE HANDLING SYSTEM

NAME: RS CHRISTENSEN

U.S. DEPARTMENT OF ENERGY
Richland Operations Office

MFD
T-PLANT SNF
SLUDGE HANDLING SYSTEM

SIZE F | BLDG NO 221-T | DWG NO ES-SHS-MFD3 | REV 0

SCALE FULL | SHEET 1 OF 1

DWG NO | TITLE | DRAWING TRACEABILITY LIST

REF NUMBER | TITLE | REFERENCES | NEXT USED ON

REVISIONS

BLDG. NO | INDEX NO | DWG NO ES-SHS-MFD3 | SH 1 OF 1 | REV 0

10A CONTAINER MOVEMENT TO STORAGE LOCATION

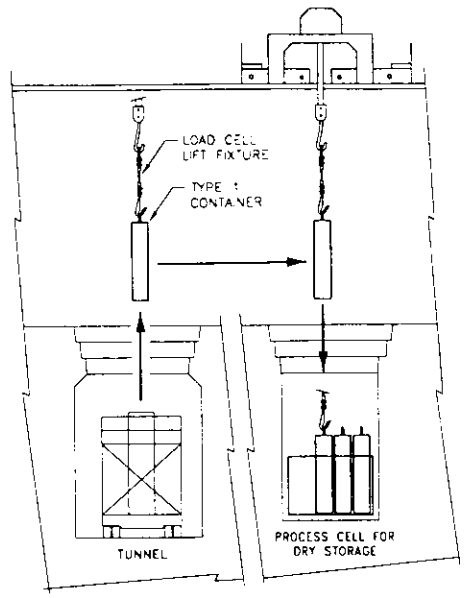

- CRANE OPERATOR LOCATES AND CONNECTS THE LOAD CELL LIFT FIXTURE
- CRANE OPERATOR REMOVES CONTAINER FROM MCO CASK WITH LOAD CELL LIFT FIXTURE
- CRANE OPERATOR PERFORMS VISUAL INSPECTION FOR DAMAGE
- CONTAINER INFORMATION (INCLUDING LABELING, WEIGHT, AND LOCATION WITHIN CELL/RACK) IS RECORDED BY T-PLANT OPERATIONS
- MBA CUSTODIAN MODIFIES MBA RECORDS FOR NEW MATERIAL
- CRANE OPERATOR PLACES CONTAINER INTO STORAGE RACK
- CRANE OPERATOR RETURNS LOAD CELL LIFT FIXTURE

TIME MIN. 35

10B CONTAINER MOVEMENT TO STORAGE LOCATION

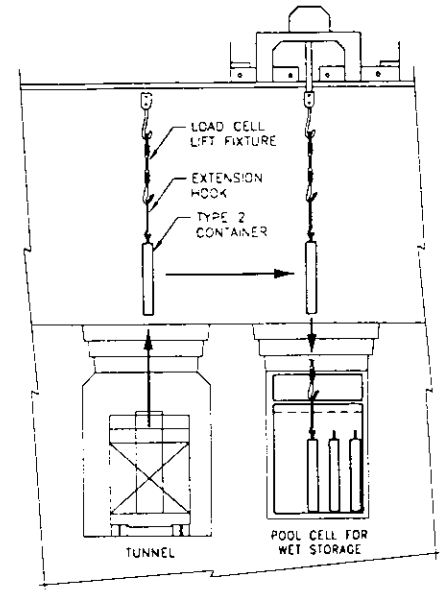

- CRANE OPERATOR LOCATES AND CONNECTS THE LOAD CELL LIFT FIXTURE AND EXTENSION HOOK
- CRANE OPERATOR REMOVES CONTAINER FROM MCO CASK WITH LOAD CELL LIFT FIXTURE AND EXTENSION HOOK
- CRANE OPERATOR PERFORMS VISUAL INSPECTION FOR DAMAGE
- CONTAINER INFORMATION (INCLUDING LABELING, WEIGHT, AND LOCATION WITHIN CELL/RACK) IS RECORDED BY T-PLANT OPERATIONS
- MBA CUSTODIAN MODIFIES MBA RECORDS FOR NEW MATERIAL
- CRANE OPERATOR PLACES CONTAINER INTO STORAGE RACK
- CRANE OPERATOR RETURNS LOAD CELL LIFT FIXTURE AND EXTENSION HOOK

TIME MIN. 35

11 PLACE TEMPORARY SHIPPING COVER ON MCO CASK

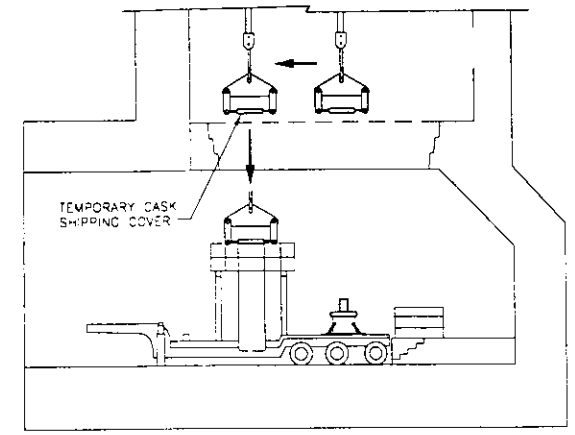

- CRANE OPERATOR CONNECTS APPROPRIATE HOOK FOR TEMPORARY CASK SHIPPING COVER
- CRANE OPERATOR PLACES TEMPORARY SHIPPING CASK SHIPPING COVER ON MCO CASK.

TIME MIN. 20

12 T-PLANT CANYON COVER BLOCK REPLACEMENT

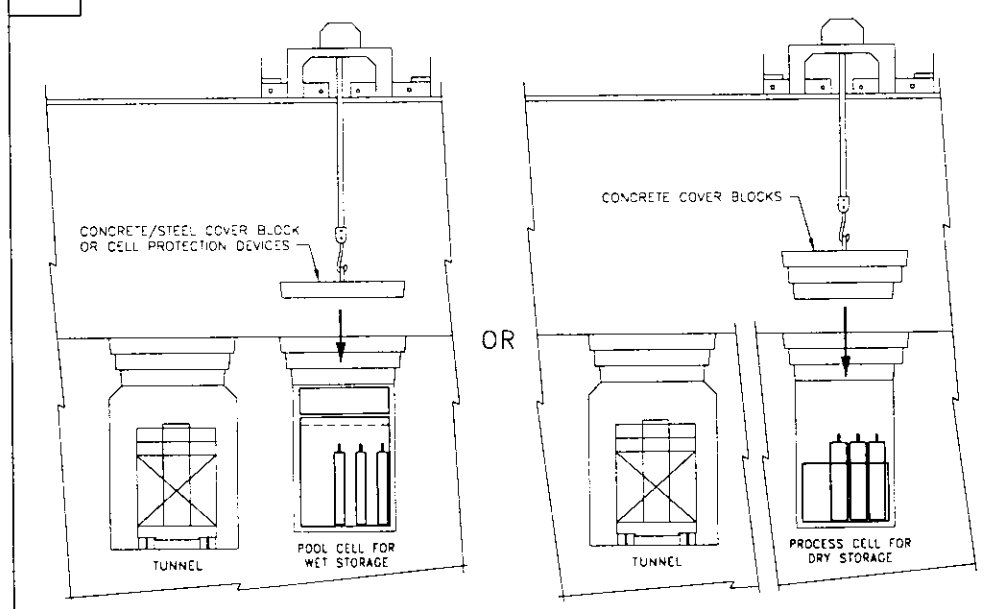

THIS ACTIVITY IS ONLY PERFORMED IF THE COVER BLOCKS ARE REQUIRED TO BE REPLACED

- T-PLANT CRANE OPERATOR LOCATES AND CONNECTS LIFTING HOOK FOR COVER BLOCK
- T-PLANT CRANE OPERATOR REMOVES SPECIFIED NUMBER OF COVER BLOCKS FROM DECK AND PLACES THEM ON THE CELL

TIME MIN. 30

CONCEPTUAL DESIGN

FLUOR FEDERAL SERVICES

PROJECT T-PLANT, SLUDGE HANDLING SYSTEM

U.S. DEPARTMENT OF ENERGY
Richland Operations Office

MFD
T-PLANT SNF
SLUDGE HANDLING SYSTEM

ES-SHS-MFD4 0

DRAWING TRACEABILITY LIST

REVISIONS

13 RELEASE OF MCO SHIPPING CASK

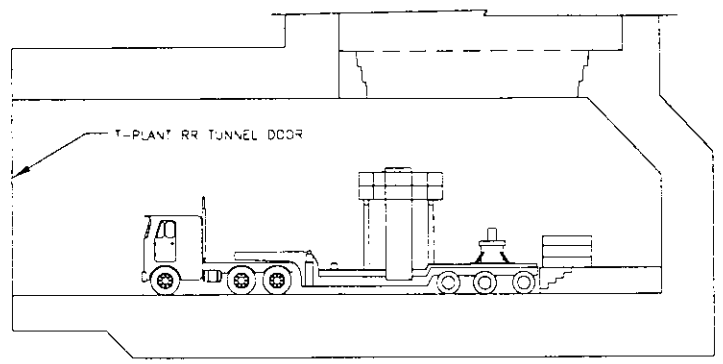

- T-PLANT OPERATIONS RAISES TUNNEL DOOR AND TEAMSTER BACKS IN TRUCK TRANSPORT
- T-PLANT OPERATIONS LOWERS TRAILER LEVELING MECHANISMS
- TRUCK RECONNECTS TO TRAILER
- TRUCK/TRAILER PULLS OUT OF TUNNEL AND DOOR IS LOWERED

TIME MIN. 40

14 RELEASE OF MCO SHIPPING CASK

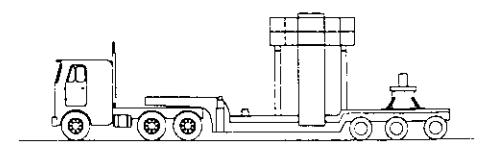

- DIRECTLY OUTSIDE TUNNEL DOOR T-PLANT RADIOLOGICAL CONTROL SURVEYS SHIPPING CASK AND TRANSPORTER/TRAILER
- T-PLANT LABS ANALYZE SURVEY RESULTS AND RELEASE TRANSPORTER/TRAINER
- T-PLANT OPERATIONS COMPLETES GENERAL CLEANUP AND RETURNS ITEMS FOR NEXT RECEIPT
- T-PLANT PERSONNEL EXIT CANYON AND DRESS DOWN

TIME MIN. 120

15 POST-JOB REVIEW

- POST-JOB REVIEW BY T-PLANT OPERATIONS

TIME MIN. 20

16 LOADING EMPTY CONTAINER INTO MCO CASK

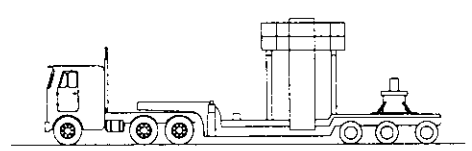

- MOVE TRUCK TO CONTAINER LOADING STATION
- REMOVE TEMPORARY CASK SHIPPING COVER
- LOAD EMPTY CONTAINER INTO CASK
- REPLACE TEMPORARY CASK SHIPPING COVER
- RETURN TO K-BASINS

TIME MIN. 110

CONCEPTUAL DESIGN

FLUOR FEDERAL SERVICES

PROJECT T-PLANT, SLUDGE HANDLING SYSTEM

U.S. DEPARTMENT OF ENERGY
Richland Operations Office

MFD
T-PLANT SNF
SLUDGE HANDLING SYSTEM

ES-SHS-MFD5 0

DWG NO | TITLE | REF NUMBER | TITLE | DESCRIPTION | REVISIONS

DRAWING TRACEABILITY LIST | REFERENCES | NEXT USED ON

APPENDIX J

SKETCHES

PROJECT TITLE: **T-PLANT, SLUDGE HANDLING SYSTEM CONCEPTUAL DESIGN**

FOR: **FLUOR HANFORD**

BY: **FLUOR FEDERAL SERVICES**

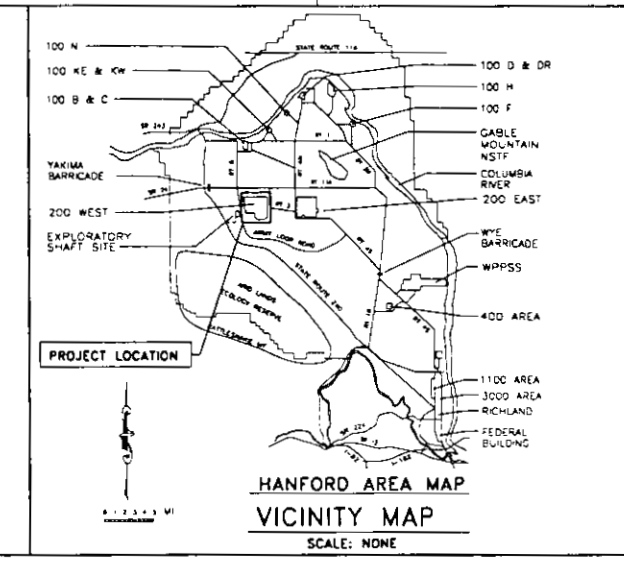

DRAWING LIST

DRAWING NO.	TITLE
GENERAL	
ES-SHS-G1 SH 1	GENERAL DRAWING LIST & KEY PLAN
CONTROL SYSTEMS	
ES-SHS-CS1 SH 1	P & ID SNF SLUDGE GENERAL NOTES & LEGEND
ES-SHS-CS2 SH 1	P & ID SNF SLUDGE HELIUM PURGE SYSTEM
ES-SHS-CS3 SH 1	P & ID SNF SLUDGE STORAGE POOL SYSTEM
ES-SHS-CS3 SH 2	P & ID SNF SLUDGE STORAGE POOL SYSTEM
ES-SHS-CS4 SH 1	P & ID SNF SLUDGE DRY STORAGE SYSTEM
PIPING / ELECTRICAL	
ES-SHS-P1 SH 1	PIPING/ELECTRICAL DRY CELL GENERAL ARRANGEMENT
ES-SHS-P2 SH 1	PIPING/ELECTRICAL WET CELL GENERAL ARRANGEMENT
ES-SHS-P2 SH 2	PIPING/ELECTRICAL WET CELL ENLARGED PLAN
ES-SHS-P2 SH 3	PIPING/ELECTRICAL WET CELL PIPING GALLERY ENLARGED PLAN
ES-SHS-P3 SH 1	PIPING HELIUM PURGE SYSTEM GENERAL ARRANGEMENT
ES-SHS-P4 SH 1	PIPING/ELECTRICAL WATER TREATMENT SKID MODULAR ARRANGEMENT

DRAWING NO.	TITLE
STRUCTURAL	
ES-SHS-S1 SH 1	STRUCTURAL DRY CELL CONTAINER RACK/LINER ASSEMBLY
ES-SHS-S1 SH 2	STRUCTURAL DRY CELL CONTAINER RESTRAINTS
ES-SHS-S1 SH 3	STRUCTURAL DRY CELL CONTAINER SUPPORT FRAME
ES-SHS-S1 SH 4	STRUCTURAL DRY CELL LINER BASE FRAME
ES-SHS-S2 SH 1	STRUCTURAL DRY CELL SUMP PUMP SUPPORT
ES-SHS-S3 SH 1	STRUCTURAL DRY CELL LEAK DETECTOR SUPPORT
ES-SHS-S4 SH 1	STRUCTURAL DRY CELL LEVELING BASE SUPPORT
ES-SHS-S5 SH 1	STRUCTURAL WET CELL LINER ASSEMBLY
ES-SHS-S5 SH 2	STRUCTURAL WET CELL LINER INTERIOR FRAME ASSEMBLY
ES-SHS-S5 SH 3	STRUCTURAL WET CELL LINER BASE FRAME
ES-SHS-S5 SH 4	STRUCTURAL WET CELL LINER SUMP BASE FRAME
ES-SHS-S6 SH 1	STRUCTURAL WET CELL CONTAINER RACK INSTALLATION PLAN
ES-SHS-S6 SH 2	STRUCTURAL WET CELL CONTAINER RACK ASSEMBLIES
ES-SHS-S7 SH 1	STRUCTURAL WET CELL SUMP PUMP SUPPORT
ES-SHS-S8 SH 1	STRUCTURAL WET CELL LEAK DETECTOR SUPPORT
ES-SHS-S9 SH 1	STRUCTURAL WET CELL LINER PROTECTOR ASSEMBLY
ES-SHS-S10 SH 1	STRUCTURAL WET CELL CONCRETE COVER BLOCKS

DRAWING NO.	TITLE
STRUCTURAL	
ES-SHS-S11 SH 1	STRUCTURAL WET CELL OPEN GRATING COVER BLOCK
ES-SHS-S12 SH 1	STRUCTURAL WET CELL LOWER SERVICE PLATFORM
ES-SHS-S13 SH 1	STRUCTURAL WATER TREATMENT SKID PLAN, SECTIONS & DETAILS
ES-SHS-S14 SH 1	STRUCTURAL WET CELL CONTAINER PROTECTION FRAME
MECHANICAL	
ES-SHS-M1 SH 1	MECHANICAL HOOK/LOAD CELL LIFTING FIXTURE
ES-SHS-M2 SH 1	MECHANICAL EXTENSION HOOK LIFTING FIXTURE
ES-SHS-M3 SH 1	MECHANICAL WATER ADDITION CONTAINER
ES-SHS-M100 SH 1	MECHANICAL TYPE 1 CONTAINER ASSEMBLY & INSTALLATION
ES-SHS-M200 SH 1	MECHANICAL TYPE 2 CONTAINER ASSEMBLY & INSTALLATION
ES-SHS-M200 SH 2	MECHANICAL TYPE 2 CONTAINER MISC PARTS
ES-SHS-M300 SH 1	MECHANICAL TYPE 2 SPACER ASSEMBLY & INSTALLATION
ES-SHS-M400 SH 1	MECHANICAL TYPE 1 & 2 CONTAINER OVERPACK ASSEMBLY
ES-SHS-M400 SH 2	MECHANICAL TYPE 1 & 2 CONTAINER OVERPACK MISC DETAILS

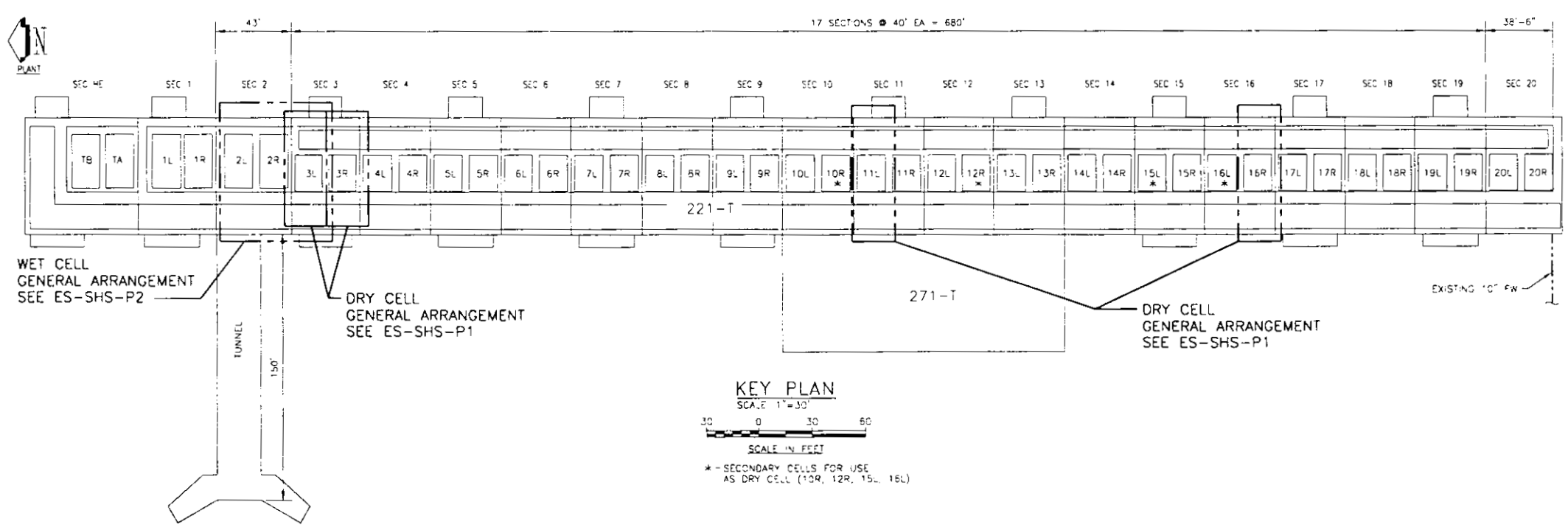

CONCEPTUAL DESIGN

FLUOR FEDERAL SERVICES

PROJECT: T-PLANT, SLUDGE HANDLING SYSTEM

NAME	DATE	COMPANY
DESIGNED BY G.L. CHRISTENSEN		

U.S. DEPARTMENT OF ENERGY
Richland Operations Office

GENERAL DRAWING LIST & KEY PLAN

SIZE F | BLDG. NO 221-T | INDEX NO | DWG NO ES-SHS-G1 | REV 0

SCALE | FOR | SHEET 1 OF 1

BLDG. NO
INDEX NO
THIS SPACE RESERVED FOR BUILDING AND INDEX NUMBERS
DWG NO ES-SHS-G1 REV 0

DWG NO	TITLE
DRAWING TRACEABILITY LIST	

REF NUMBER	TITLE
REFERENCES	
NEXT USED ON END ITEM	

REVISIONS

LEGEND:

- FLOW DIRECTION
- CONTROL WIRING
- EXISTING LINE
- CAP
- QUICK DISCONNECT
- PUMP
- SOLENOID VALVE
- BLOCK VALVE
- BALL VALVE
- GLOBE VALVE
- REGULATOR VALVE
- SELF REGULATING FLOW CONTROLLER
- ROTAMETER
- FILTER
- LEVEL GAUGE
- XX / XXX — LOCALLY MOUNTED INSTRUMENT OR ELEMENT
- XX / XXX — FRONT PANEL MOUNTED INSTRUMENT

INTERLOCK SCHEDULE:

1/X HARD WIRE INTERLOCK

1/1 IF POOL WATER TEMPERATURE IS HIGH, THEN TURN ON POOL WATER PUMP 3.

IF POOL WATER TEMEPERATURE IS HIGH AND FLOW IS LOW THEN SWITCH TO POOL WATER PUMP P4.

1/2 IF POOL WATER TEMPERATURE IS HIGH THEN:

- OPEN VALVE ON HEAT EXCHANGER NO.1 AND
- TURN ON COOLING WATER PUMP P5A AND
- TURN ON CHILLER NO. 1

IF POOL WATER TEMPERATURE IS HIGH AND EITHER LOW FLOW OR TEMPERATURE IS HIGH ON AIR COOLED CHILLER SYSTEM NO.1 THEN

- TURN OFF CHILLER NO.1 AND
- TURN OFF COOLING WATER PUMP P5A AND
- CLOSE VALVE ON HEAT EXCHANGER NO.1

THEN:

- OPEN VALVE ON HEAT EXCHANGER NO.2 AND
- TURN ON COOLING WATER PUMP P5B AND
- TURN ON CHILLER NO.2

WHEN POOL WATER TEMPERATURE RETURNS TO NORMAL CONDITION REVERSE STARTUP PROCEDURE TO SHUT DOWN SYSTEM THAT IS CURRENTLY OPERATING

INSTRUMENT SYMBOL LETTER INDENT

	FIRST LETTER	2nd/SUCCEEDING LETTER
A	ANALYSIS	ALARM
C		CONTROL
D	DENSITY	DIFFERENTIAL, DETECTOR
E		ELEMENT
F	FLOW	RATIO
H	HAND	HIGH
I	CURRENT	INDICATOR
J	POWER	
K		RELAY
L	LEVEL, LIQUID	INDICATOR LIGHT, LOW
M	MOTOR	
P	PRESSURE	
Q		TOTALIZING
R	RADIATION	RELIEF
S	SPEED, FREQ, SELECTOR	SWITCH, SAFETY
T	TEMPERATURE	TRANSMITTER
U	FLOW & DENSITY (MULTI VARIABLE)	
V	VIBRATION	VALVE
W		
X	FAILURE	FAILURE
Y	EVENT, STATE	RELAY, CONVERTER
Z	POSITION	
LD	LEAK DETECTION	

CONCEPTUAL DESIGN

FLUOR FEDERAL SERVICES

PROJECT: T-PLANT, SLUDGE HANDLING SYSTEM

U.S. DEPARTMENT OF ENERGY
Richland Operations Office

P & ID
SNF SLUDGE
GENERAL NOTES & LEGEND

ES-SHS-CS1 REV 0

SCALE FULL

DWG NO | TITLE | DRAWING TRACEABILITY LIST

ES-SHS-C1 | DRAWING LIST & KEY MAP
REF NUMBER | TITLE | REFERENCES
NEXT USED ON END ITEM

REVISIONS

BLDG NO.
INDEX NO.
THIS SPACE RESERVED FOR BUILDING AND INDEX NUMBERS

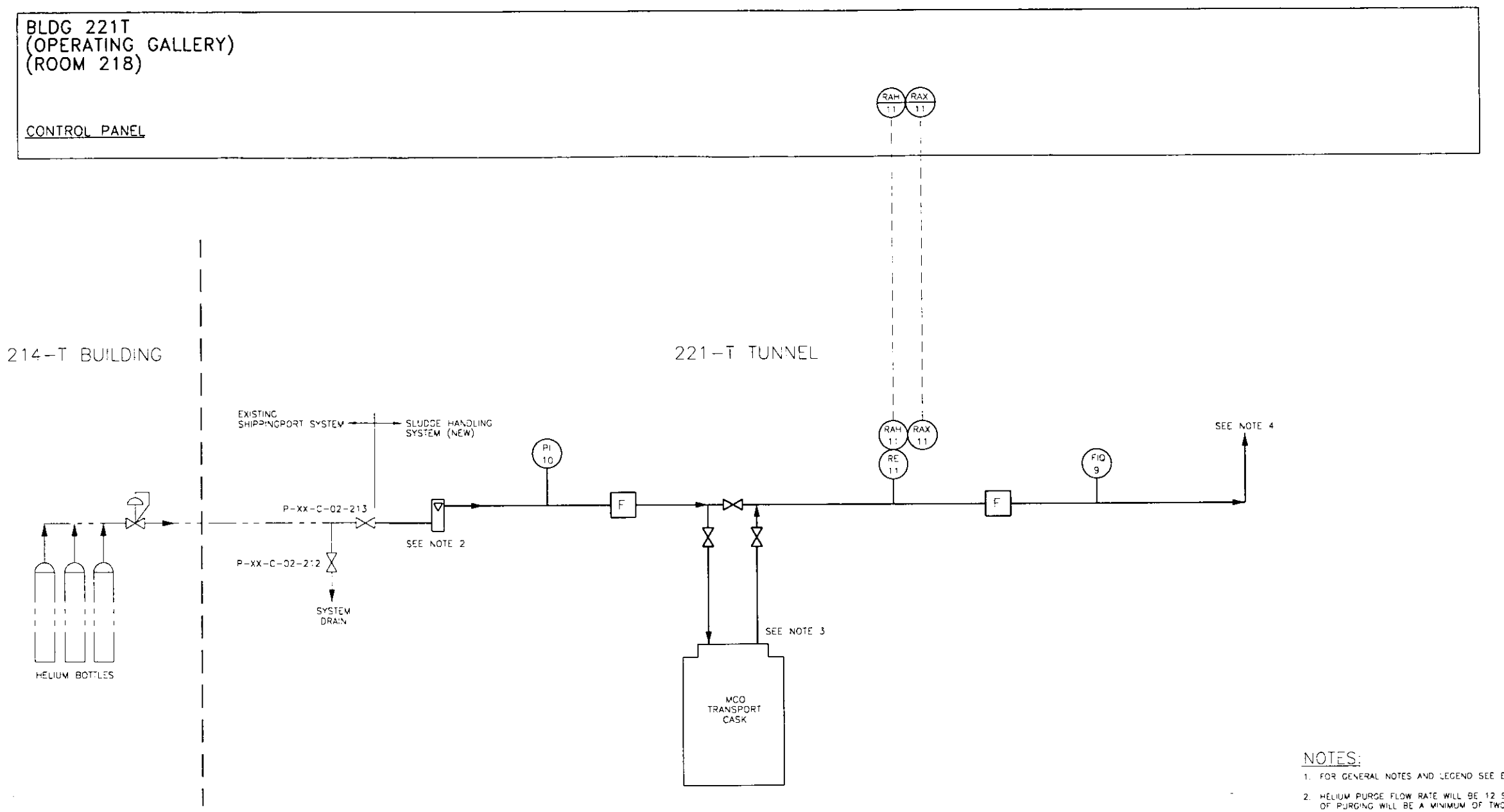

NOTES:

1. FOR GENERAL NOTES AND LEGEND SEE ES-SHS-CS1.
2. HELIUM PURGE FLOW RATE WILL BE 12 SCFM. DURATION OF PURGING WILL BE A MINIMUM OF TWO MINUTES.
3. CONNECTIONS TO CASK MUST AUTOMATICALLY SEAL WHEN DISCONNECTED.
4. PURGED GAS WILL BE VENTED HIGH IN THE TUNNEL TO MINIMIZE PERSONNEL EXPOSURE TO GAS.
5. NUMBER REPRESENTED IN EACH EQUIPMENT IS AN ARBITRARY NUMBER ONLY. IT WILL BE CHANGED DURING DEFINITIVE DESIGN.

CONCEPTUAL DESIGN

FLUOR FEDERAL SERVICES

PROJECT: T-PLANT, SLUDGE HANDLING SYSTEM

U.S. DEPARTMENT OF ENERGY
Richland Operations Office

P & ID
SNF SLUDGE
HELIUM PURGE SYSTEM

SIZE F | BLDG NO 221-T | INDEX NO | DWG NO ES-SHS-CS2 | REV 0

SCALE FULL | SHEET 1 OF 1

DWG NO	TITLE
DRAWING TRACEABILITY LIST	

REF NUMBER	TITLE
ES-SHS-G1	DRAWING LIST & KEY MAP
REFERENCES	
NEXT USED ON END ITEM	

REVISIONS

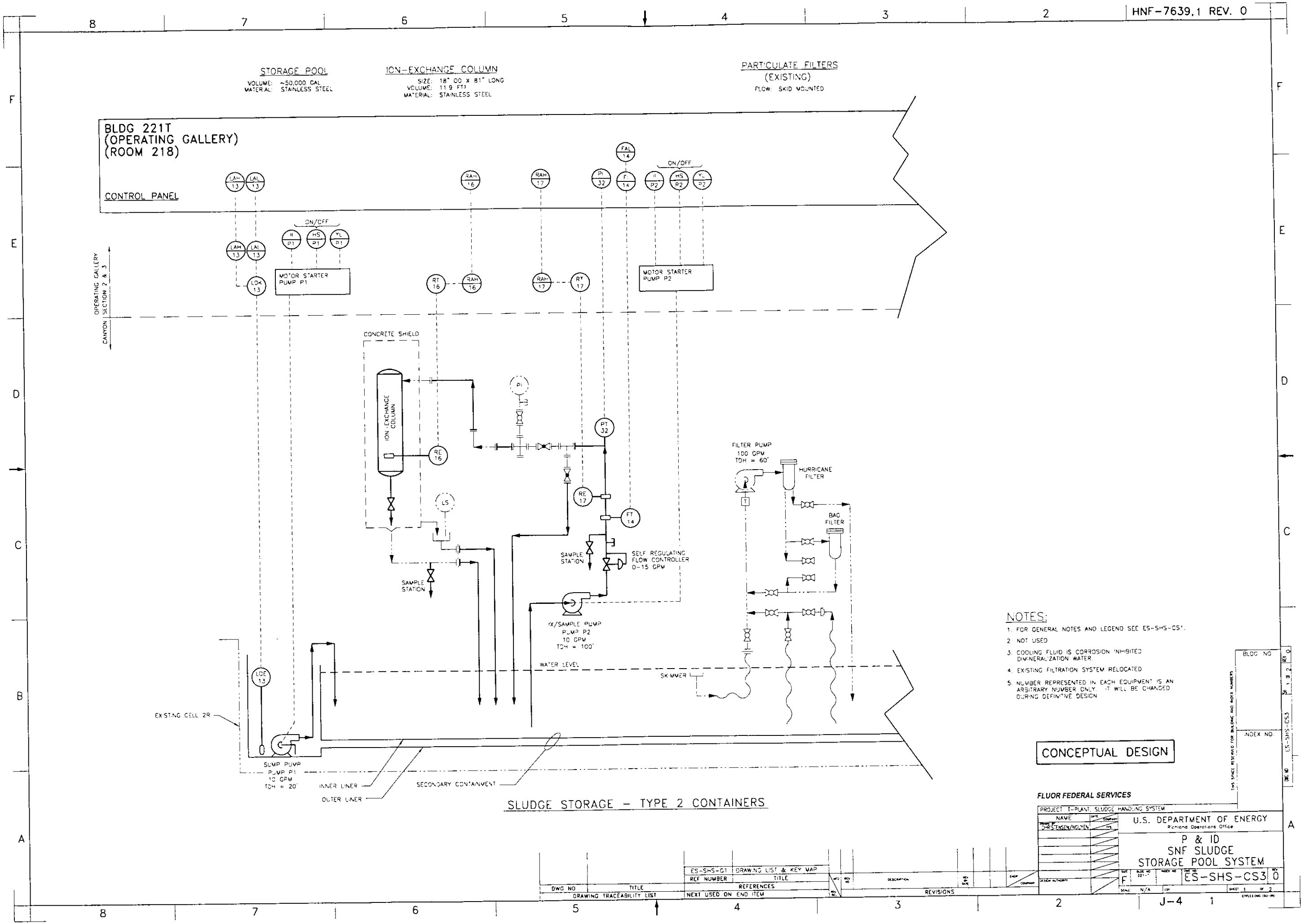

SLUDGE STORAGE - TYPE 2 CONTAINERS

NOTES:

1. FOR GENERAL NOTES AND LEGEND SEE ES-SHS-CS1.
2. NOT USED
3. COOLING FLUID IS CORROSION INHIBITED DIMINERALIZATION WATER.
4. EXISTING FILTRATION SYSTEM RELOCATED
5. NUMBER REPRESENTED IN EACH EQUIPMENT IS AN ARBITRARY NUMBER ONLY. IT WILL BE CHANGED DURING DEFINITIVE DESIGN

CONCEPTUAL DESIGN

FLUOR FEDERAL SERVICES

PROJECT T-PLANT, SLUDGE HANDLING SYSTEM

U.S. DEPARTMENT OF ENERGY
Richland Operations Office

P & ID
SNF SLUDGE
STORAGE POOL SYSTEM

ES-SHS-CS3 REV 0

DWG NO	TITLE
ES-SHS-G1	DRAWING LIST & KEY MAP

DRAWING TRACEABILITY LIST

REFERENCES

NEXT USED ON END ITEM

REVISIONS

J-4

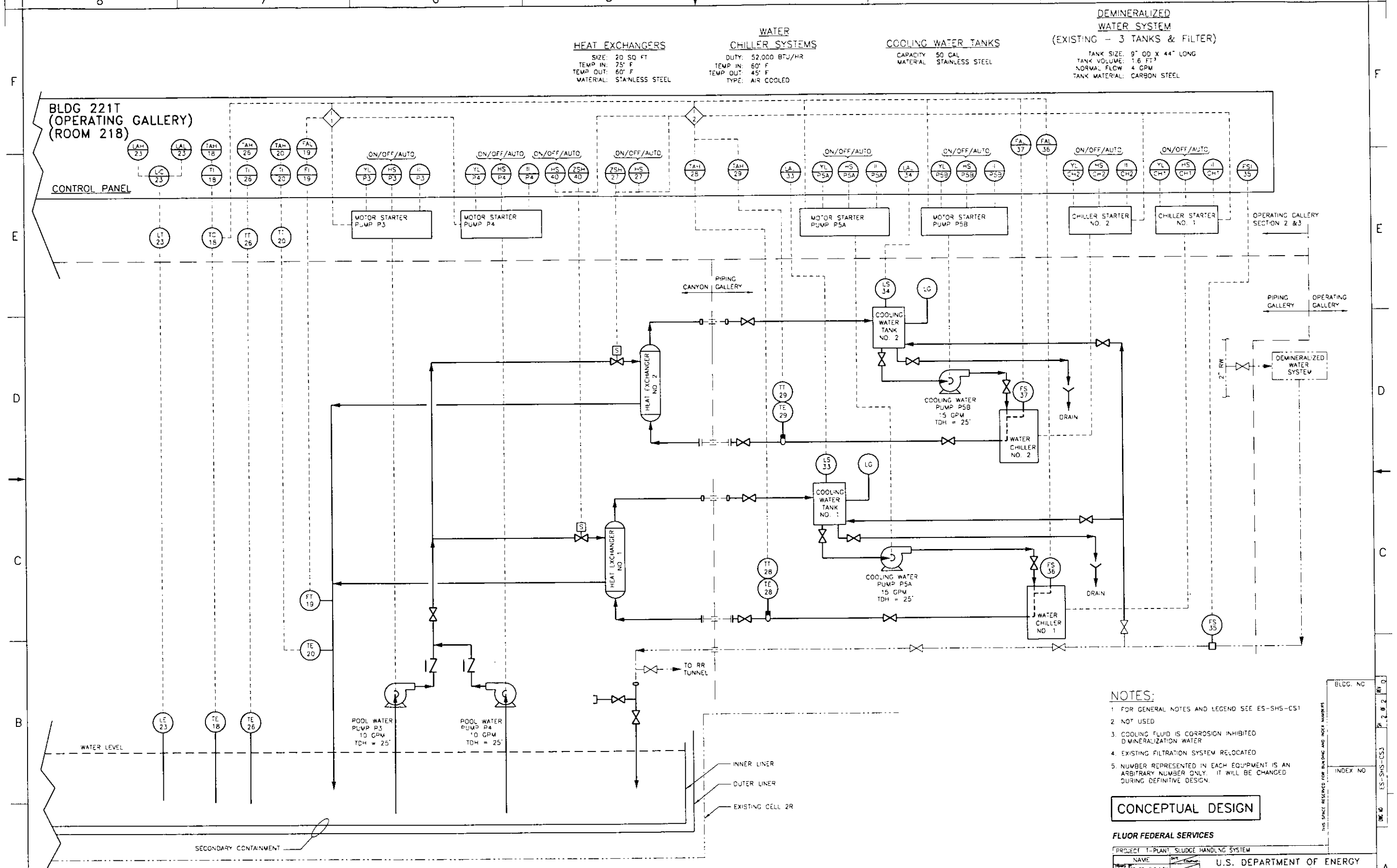

NOTES:

1. FOR GENERAL NOTES AND LEGEND SEE ES-SHS-CS1
2. NOT USED
3. COOLING FLUID IS CORROSION INHIBITED DEMINERALIZATION WATER
4. EXISTING FILTRATION SYSTEM RELOCATED
5. NUMBER REPRESENTED IN EACH EQUIPMENT IS AN ARBITRARY NUMBER ONLY. IT WILL BE CHANGED DURING DEFINITIVE DESIGN.

CONCEPTUAL DESIGN

FLUOR FEDERAL SERVICES

PROJECT T-PLANT SLUDGE HANDLING SYSTEM

NAME	DATE	COMPANY
DRAWN BY CHRISTENSEN/MOUNEN		FFS
DESIGN AUTHORITY		

U.S. DEPARTMENT OF ENERGY
Richland Operations Office

P & ID
SNF SLUDGE
STORAGE POOL SYSTEM

SIZE F | BLDG NO 221-T | INDEX NO | DWG NO ES-SHS-CS3 | REV 0

SCALE N/A | CDF | SHEET 2 OF 2

BLDG. NO | INDEX NO | THIS SPACE RESERVED FOR BUILDING AND INDEX NUMBERS

DWG NO	TITLE
ES-SHS-G1	DRAWING LIST & KEY MAP

DRAWING TRACEABILITY LIST

REF NUMBER	TITLE
	REFERENCES
NEXT USED ON END ITEM	

REV NO	DATE	DESCRIPTION	CHKD	CHKD DATE	CHKD COMPANY

REVISIONS

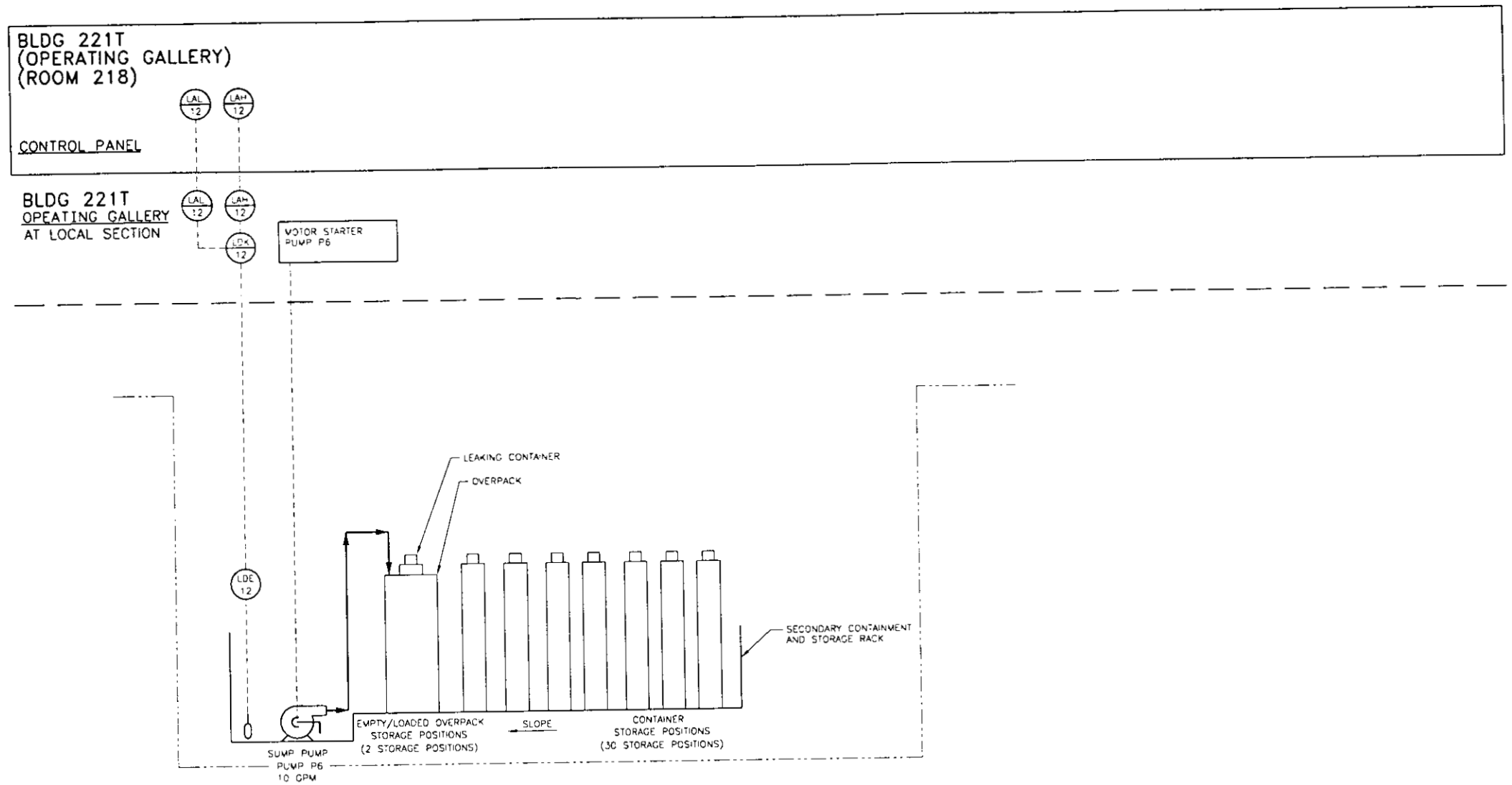

TYPICAL PROCESS CELL FOR TYPE 1 CONTAINER STORAGE

NOTES:

1. FOR GENERAL NOTES AND LEGEND SEE ES-SHS-CS1.
2. NUMBER REPRESENTED IN EACH EQUIPMENT IS AN ARBITRARY NUMBER ONLY. IT WILL BE CHANGED DURING DEFINITIVE DESIGN.

CONCEPTUAL DESIGN

FLUOR FEDERAL SERVICES

PROJECT T-PLANT, SLUDGE HANDLING SYSTEM

U.S. DEPARTMENT OF ENERGY
Richland Operations Office

P & ID
SNF SLUDGE
DRY STORAGE SYSTEM

SIZE F | BLDG NO 221-1 | INDEX NO | DWG NO ES-SHS-CS4 | REV 0

SCALE N/A | SHEET 1 OF 1

DWG NO	TITLE
DRAWING TRACEABILITY LIST	

REF NUMBER	TITLE
ES-SHS-G1	DRAWING LIST & KEY MAP
REFERENCES	
NEXT USED ON	

REVISIONS

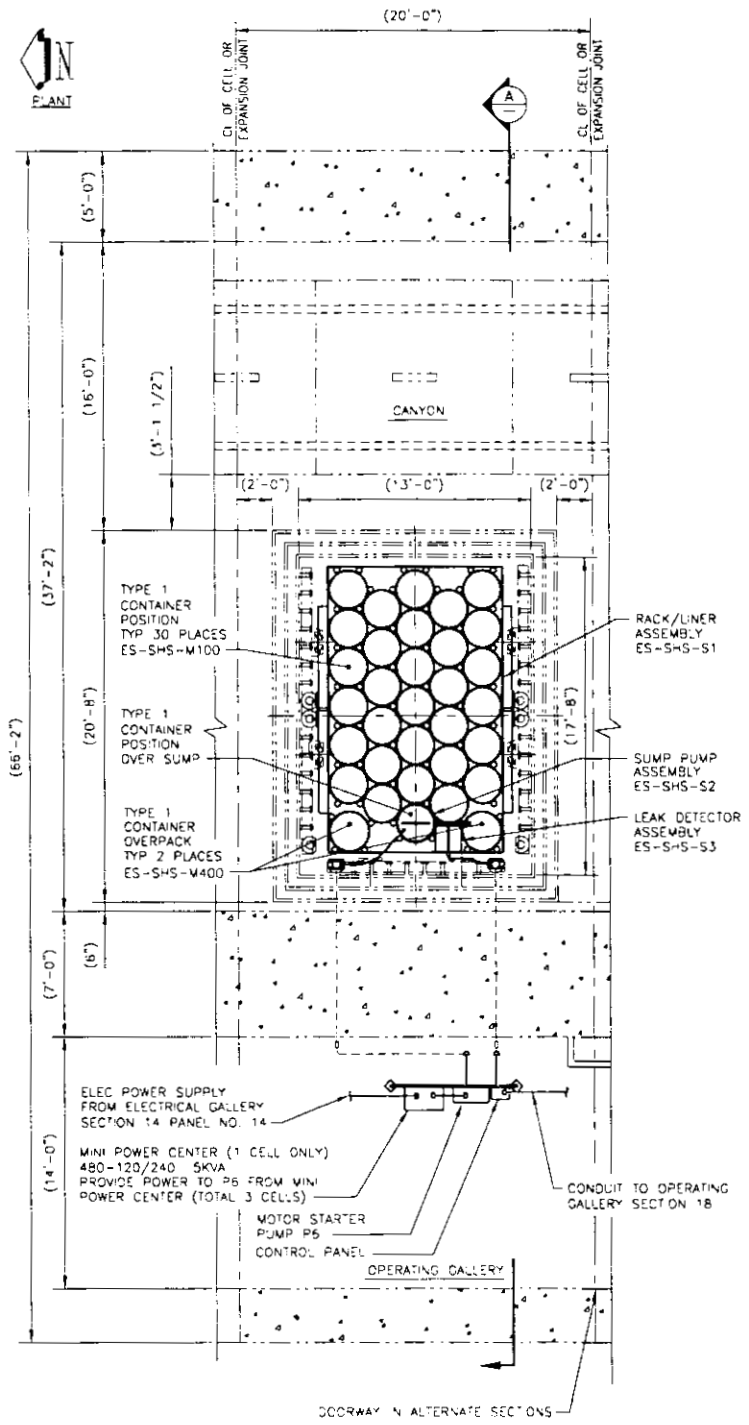

PROCESS CELL GENERAL LAYOUT
SCALE 1/4"=1'-0"

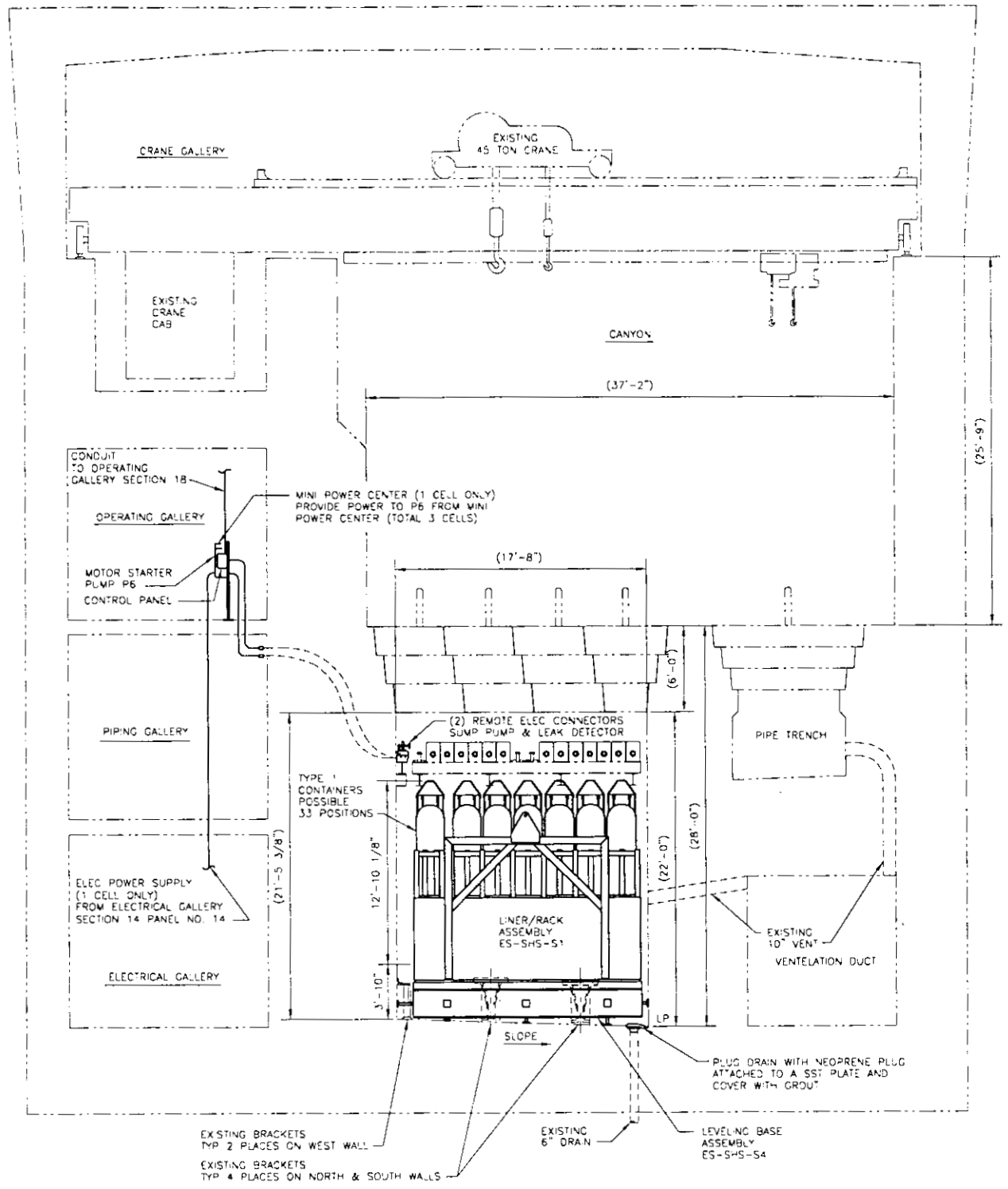

A SECTION
SCALE: 1/4"=1'-0"

CONCEPTUAL DESIGN

FLUOR FEDERAL SERVICES

PROJECT T-PLANT, SLUDGE HANDLING SYSTEM

NAME: RS CHRISTENSEN

U.S. DEPARTMENT OF ENERGY
Richland Operations Office

PIPING/ELECTRICAL
DRY CELL
GENERAL ARRANGEMENT

SIZE F | BLDG NO 221-T | INDEX NO | DWG NO ES-SHS-P1 | REV 0

SCALE | SHEET 1 OF 1

DWG NO	TITLE
DRAWING TRACEABILITY LIST	

REF NUMBER	TITLE
ES-SHS-G1	DRAWING LIST & KEY MAP

REFERENCES
NEXT USED ON END ITEM

REVISIONS

BLDG. NO
INDEX NO.
DWG NO ES-SHS-P1 | SH 1 OF 1 | REV 0

THIS SPACE RESERVED FOR BUILDING AND INDEX NUMBERS

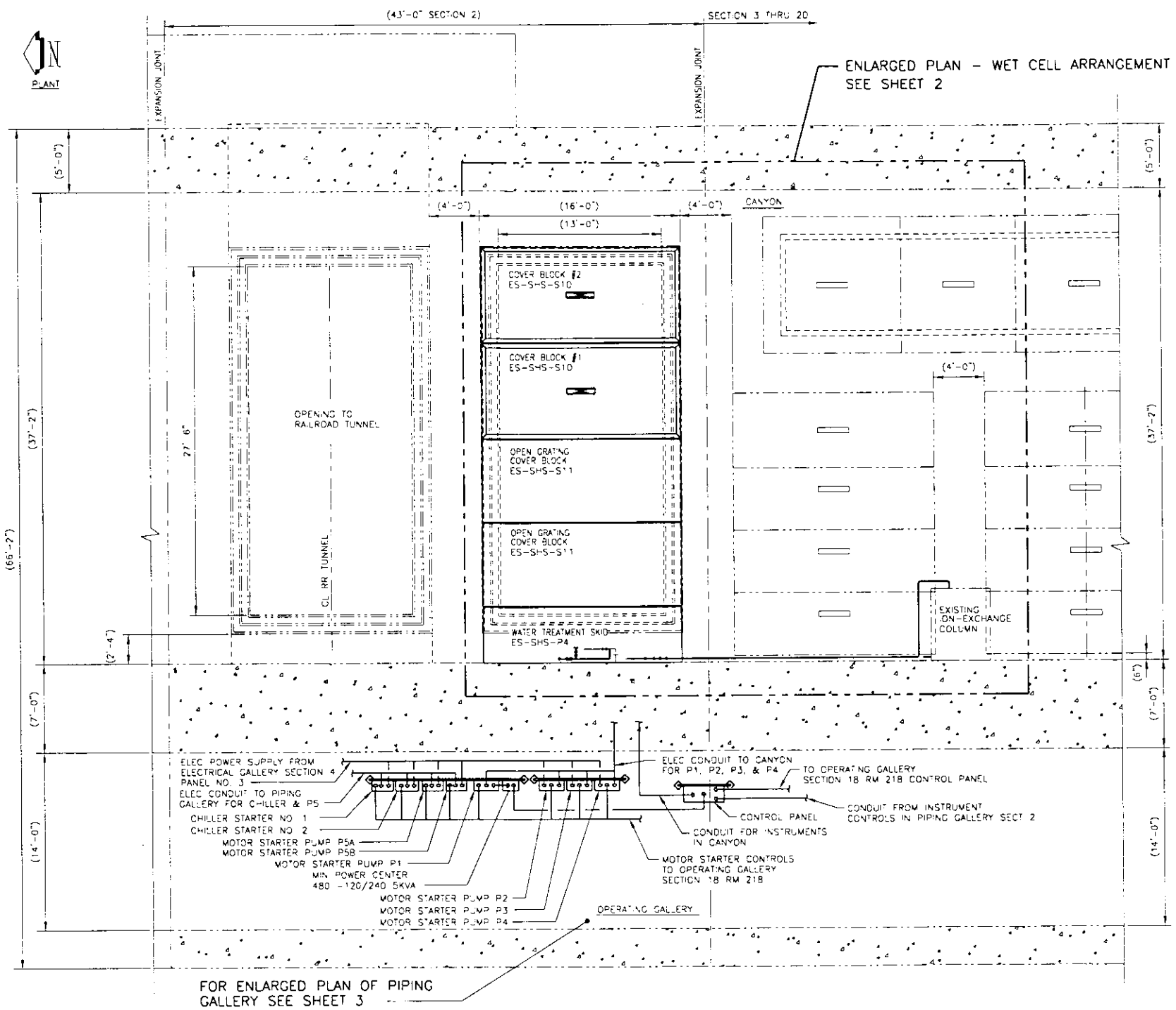

WET CELL GENERAL LAYOUT

SCALE 1/4"=1'-0"

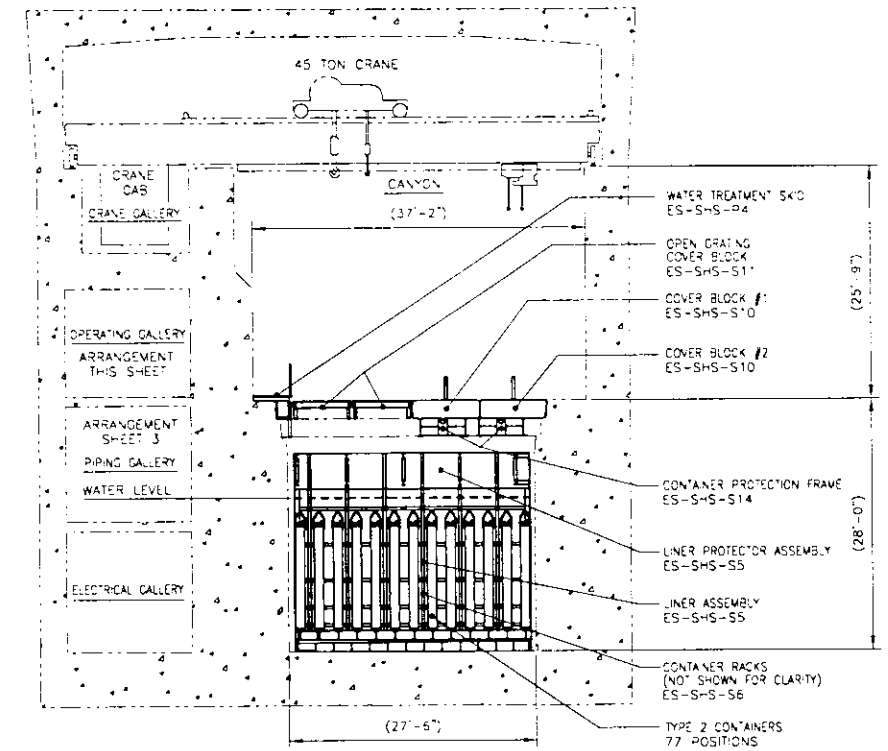

SIMPLIFIED CROSS SECTION

PUMP DESCRIPTION AND LOCATION		
LABEL	DESCRIPTION	LOCATION
P1	SUMP PUMP	CELL 2R, IN SECONDARY POOL CONTAINMENT
P2	ION EXCHANGE AND SAMPLE PUMP	CELL 2R, WATER TREATMENT SKID
P3	POOL WATER PUMP (PRIMARY)	CELL 2R, WATER TREATMENT SKID
P4	POOL WATER PUMP (BACKUP)	CELL 2R, WATER TREATMENT SKID
P5A	COOLING WATER PUMP (PRIMARY)	OPERATING GALLERY SECTION 2-3
P5A	COOLING WATER PUMP (BACKUP)	OPERATING GALLERY SECTION 2-3
P6	SUMP PUMP	OPERATING GALLERY (LOCAL TO CELL USED)

CONCEPTUAL DESIGN

FLUOR FEDERAL SERVICES

PROJECT: T-PLANT, SLUDGE HANDLING SYSTEM

NAME: RS CHRISTENSEN

U.S. DEPARTMENT OF ENERGY
Richland Operations Office

PIPING/ELECTRICAL
WET CELL
GENERAL ARRANGEMENT

SIZE F | BLDG NO 221-T | INDEX NO | DWG NO ES-SHS-P2 | REV 0

SCALE | CAD | SHEET 1 OF 3

DWG NO	TITLE
ES-SHS-G1	DRAWING LIST & KEY MAP
REF NUMBER	TITLE
REFERENCES	
NEXT USED ON	END ITEM

DRAWING TRACEABILITY LIST

REVISIONS

THIS SPACE RESERVED FOR BUILDING AND INDEX NUMBERS

BLDG. NO.

INDEX NO.

DWG NO ES-SHS-P2 | DR 1 9 5 | REV 0

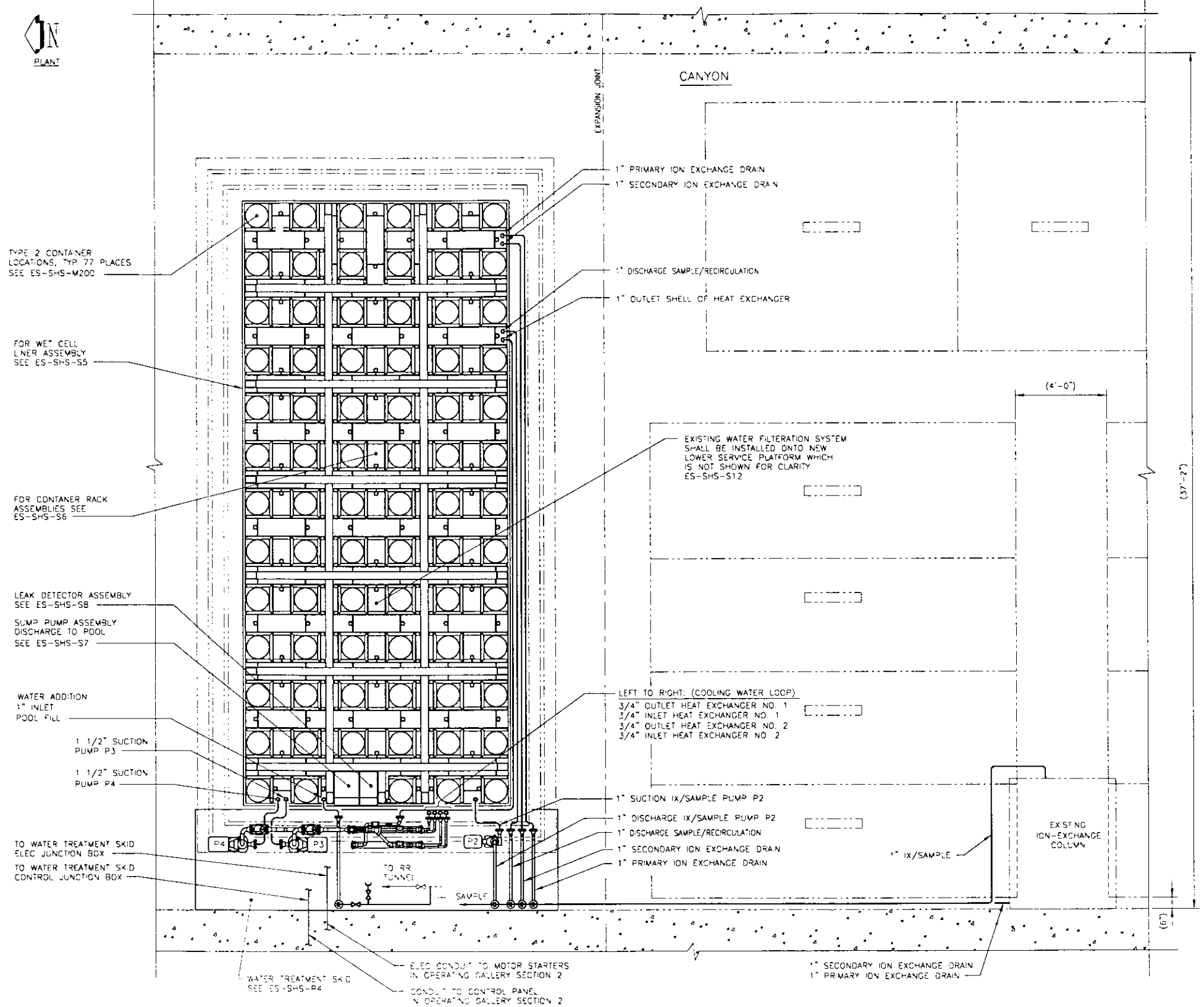

ENLARGED PLAN – WET CELL ARRANGEMENT

SHEET 1 SCALE: 1/2"=1'-0"

CONCEPTUAL DESIGN

FLUOR FEDERAL SERVICES

PROJECT: T-PLANT, SLUDGE HANDLING SYSTEM

NAME	DATE	COMPANY
DRAWN BY RS CHRISTENSEN		FFS

U.S. DEPARTMENT OF ENERGY
Richland Operations Office

PIPING/ELECTRICAL
WET CELL
ENLARGED PLAN

SIZE F | BLDG NO 221-T | INDEX NO | DWG NO ES-SHS-P2 | REV 0

SCALE | LOT | SHEET 2 OF 3

BLDG NO.
INDEX NO.
DWG NO LS-SHS-P2 REV 0
THIS SPACE RESERVED FOR BUILDING AND INDEX NUMBERS

DWG NO	TITLE
ES-SHS-01	DRAWING LIST & KEY MAP
REF NUMBER	TITLE

DRAWING TRACEABILITY LIST — REFERENCES — NEXT USED ON END ITEM

REVISIONS — DESCRIPTION — DESIGN AUTHORITY

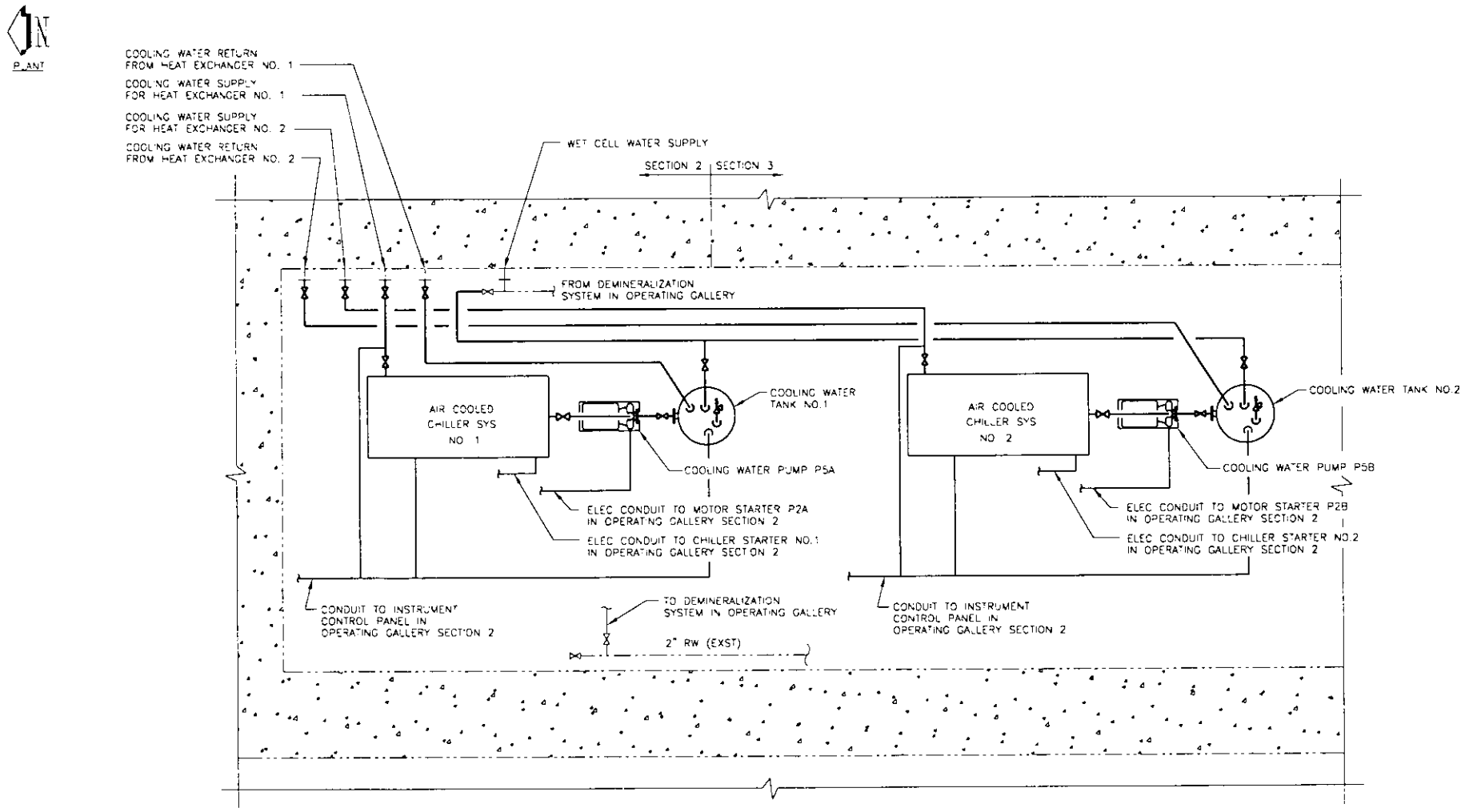

ENLARGED PLAN – PIPING GALLERY SECTION 2

SHEET 1 – SCALE: 1/2"=1'-0"

CONCEPTUAL DESIGN

FLUOR FEDERAL SERVICES

PROJECT T-PLANT, SLUDGE HANDLING SYSTEM

NAME: RS CHRISTENSEN

U.S. DEPARTMENT OF ENERGY
Richland Operations Office

PIPING/ELECTRICAL
WET CELL
PIPING GALLERY ENLARGED PLAN

SIZE F | BLDG NO 221-T | INDEX NO | DWG NO ES-SHS-P2 | REV 0

SCALE | SHEET 3 OF 3

DWG NO	TITLE
DRAWING TRACEABILITY LIST	

REF NUMBER	TITLE
ES-SHS-G1	DRAWING LIST & KEY MAP
REFERENCES	
NEXT USED ON END ITEM	

REVISIONS

BLDG. NO.

INDEX NO.

DWG NO ES-SHS-P2 | SH 3 OF 3 | REV 0

THIS SPACE RESERVED FOR BUILDING AND INDEX NUMBERS

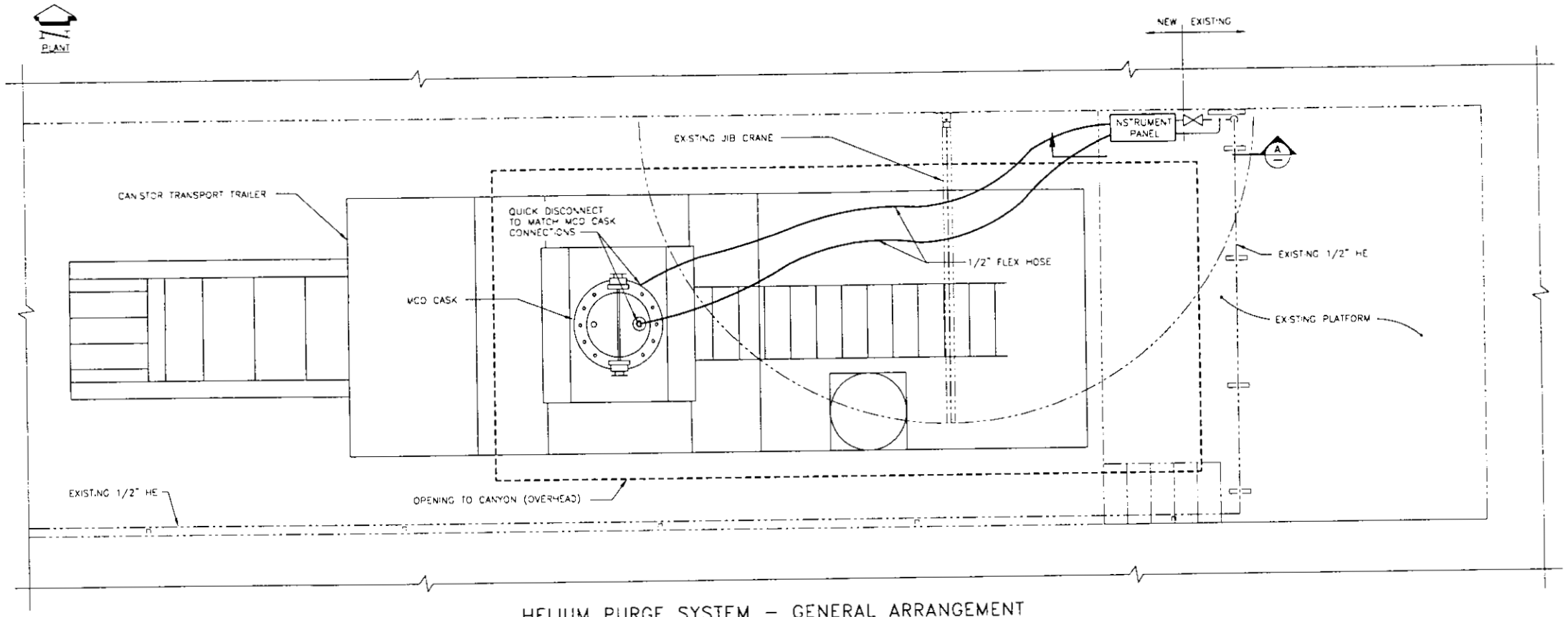

HELIUM PURGE SYSTEM – GENERAL ARRANGEMENT
SCALE: 1/4"=1'-0"

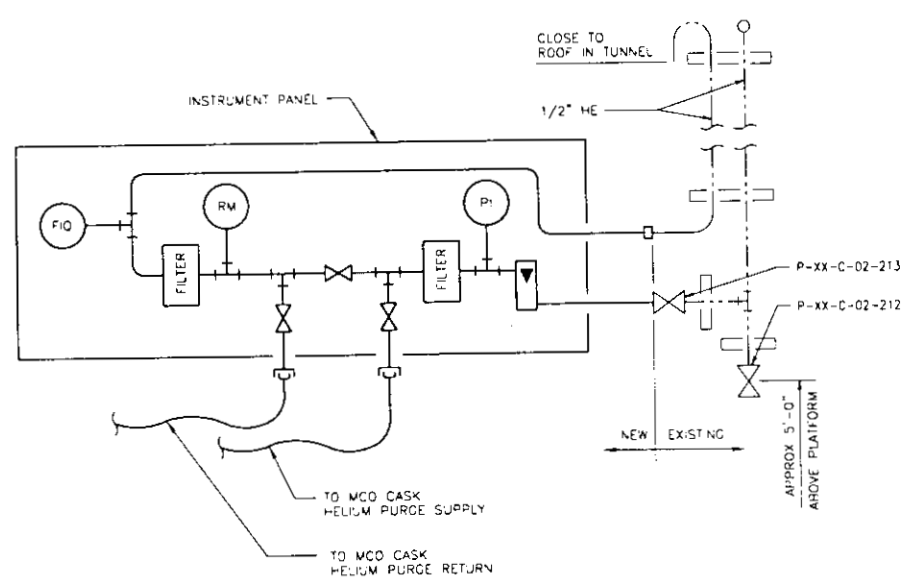

A SECTION
SCALE: NONE

CONCEPTUAL DESIGN

FLUOR FEDERAL SERVICES

PROJECT: T-PLANT, SLUDGE HANDLING SYSTEM

NAME	DATE	COMPANY
DRAWN BY RS CHRISTENSEN		

U.S. DEPARTMENT OF ENERGY
Richland Operations Office

PIPING
HELIUM PURGE SYSTEM
GENERAL ARRANGEMENT

SIZE F | BLDG NO 221-T | INDEX NO | DWG NO ES-SHS-P3 | REV 0

SCALE | EDT | SHEET 1 OF 1

BLDG. NO.
INDEX NO.
DWG NO ES-SHS-P3 | REV 0

DWG NO	TITLE
DRAWING TRACEABILITY LIST	

REF NUMBER	TITLE
ES-SHS-G1	DRAWING LIST & KEY MAP
REFERENCES	
NEXT USED ON END ITEM	

REVISIONS

J-11 1

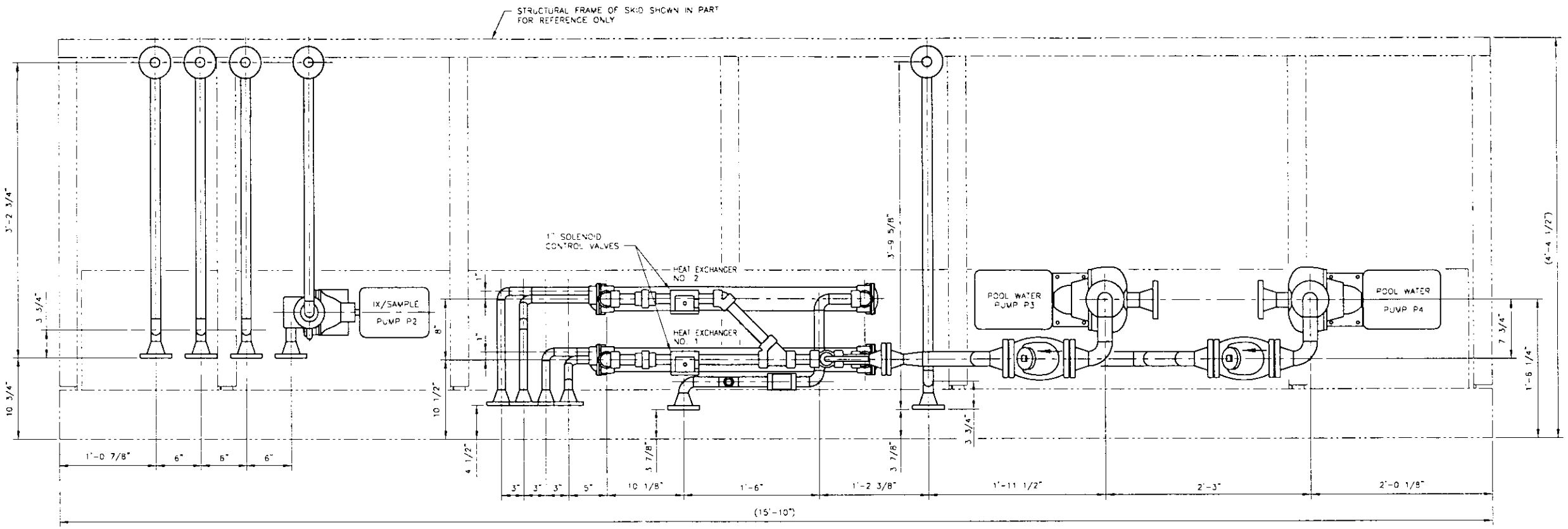

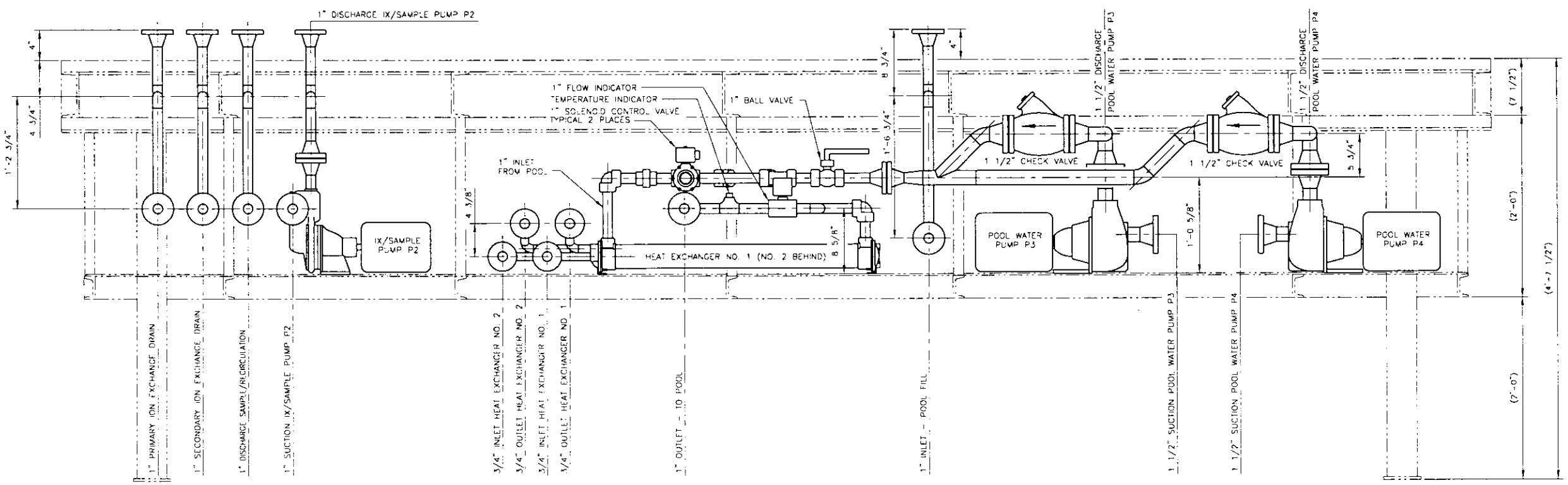

NOTES:

1. PIPE SUPPORTS NOT SHOWN. SUPPORTS WILL BE REQUIRED AT INLETS & OUTLET FLANGES TO THE MODULAR SUPPORT FRAME. HEAT EXCHANGERS AND PUMPS SHALL BE ANCHORED TO THE PLATE PROVIDED IN THE MODULAR SUPPORT FRAME
2. MATERIAL FOR CONSTRUCTION
   PIPING ASSEMBLY
   ALL PIPING SHALL BE SST -AW
   PIPE CODE M9
3. ELECTRICAL & CONTROL CONNECTIONS ARE NOT SHOWN. THEY SHALL BE INSTALLED AS PART OF THE MODULE ASSEMBLY TO PROVIDE MODULAR CONNECTIONS FOR THE PUMPS, FLOW INDICATOR, AND TEMPERATURE INDICATOR.

MODULAR ARRANGEMENT

SCALE: 1/6

CONCEPTUAL DESIGN

FOR NOTES SEE ZONE A8

FLUOR FEDERAL SERVICES

DWG NO	TITLE	REFERENCES
ES-SHS-G1	DRAWING LIST & KEY MAP	

DRAWING TRACEABILITY LIST — NEXT USED ON END ITEM

REVISIONS

PROJECT: T-PLANT, SLUDGE HANDLING SYSTEM

NAME	DATE
DRAWN BY RS CHRISTENSEN	

U.S. DEPARTMENT OF ENERGY
Richland Operations Office

PIPING/ELECTRICAL
WATER TREATMENT SKID
MODULAR ARRANGEMENT

SIZE F | BLDG NO 221-T | DWG NO ES-SHS-P4 | REV 0

SCALE | SHEET 1 OF 1

BLDG. NO | INDEX NO. | DWG NO ES-SHS-P4 | REV 0

THIS SPACE RESERVED FOR BUILDING AND INDEX NUMBERS

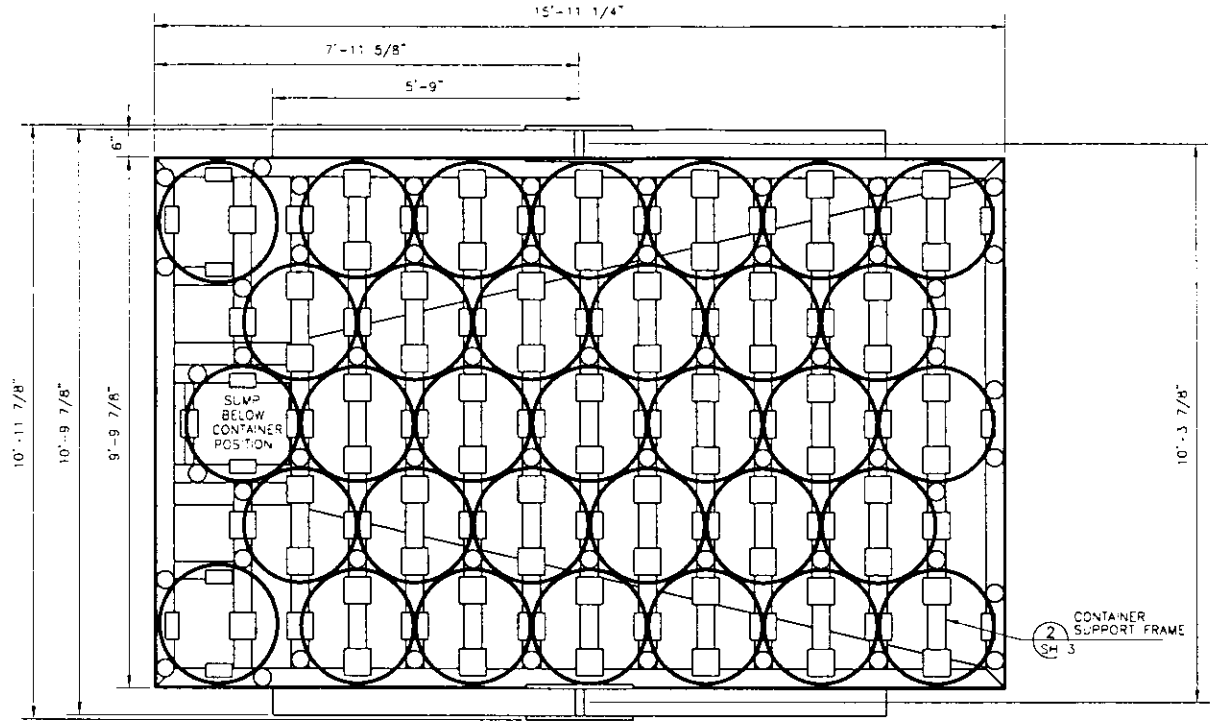

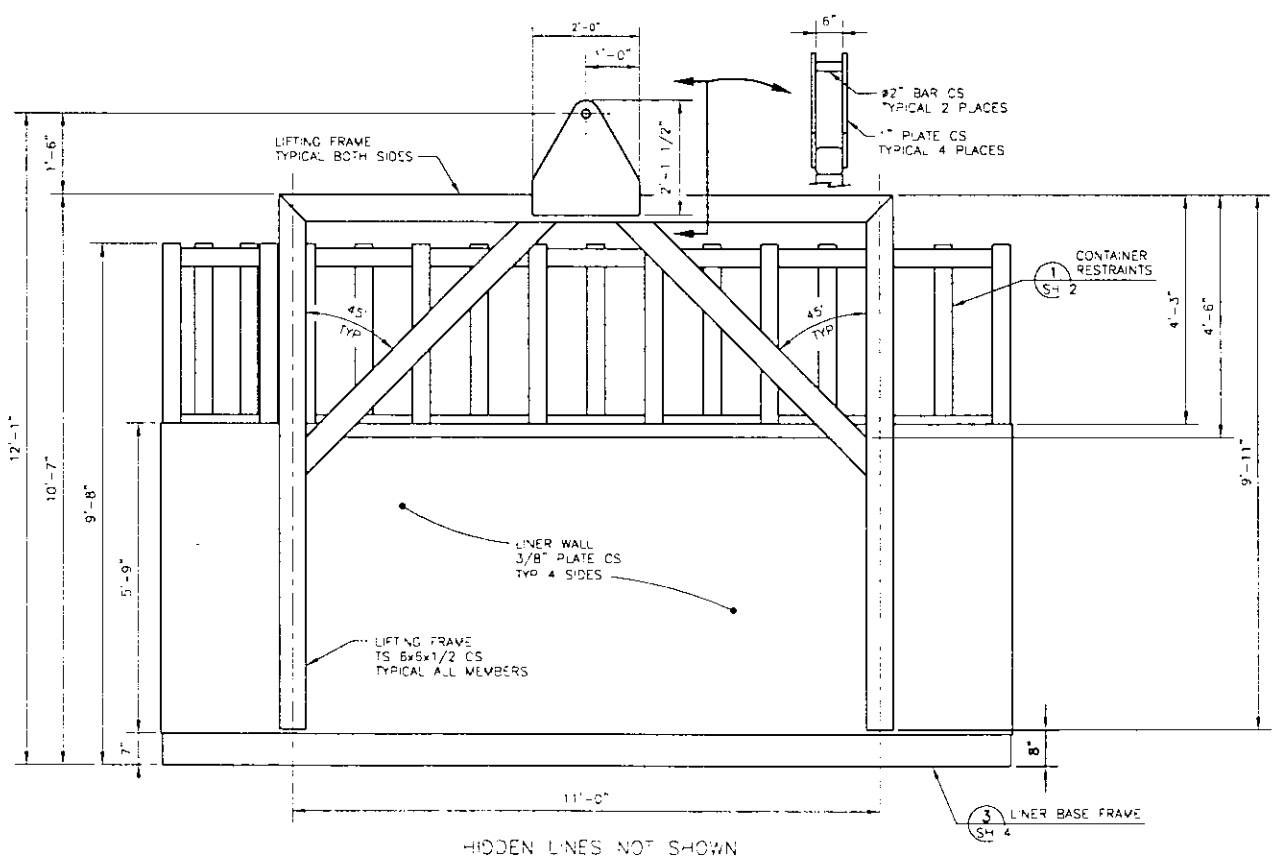

HIDDEN LINES NOT SHOWN FOR CLARITY

CONTAINER RACK/LINER ASSEMBLY

SCALE 3/4"=1'-0"

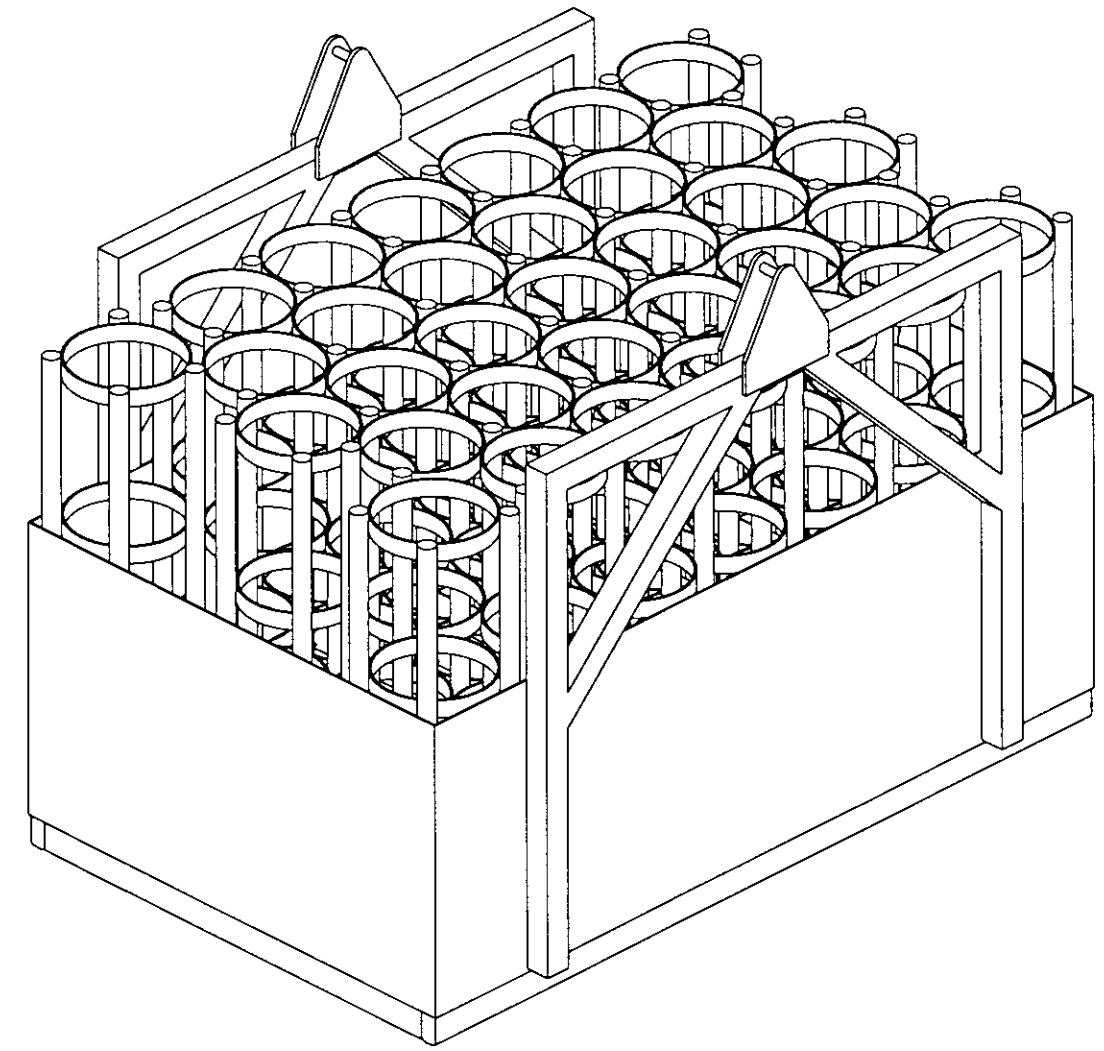

ISOMETRIC VIEW

APPROX WEIGHT: 23,000 LBS

BILL OF MATERIALS	
DESCRIPTION	QTY
TS 12x4x1/4, ASTM A500	32 LF
TS 12x2x1/4, ASTM A500	20 LF
TS 8x4x1/4, ASTM A500	175 LF
TS 8x2x1/4, ASTM A500	2 LF
TS 6x6x1/2, ASTM A500	96 LF
3 1/2" SCHED 10 PIPE, ASTM A53	448 LF
2" DIA RD BAR, ASTM A36	2 LF
3/8" PLATE, ASTM A36	455 SQ FT
1" PLATE, ASTM A36	8 SQ FT
4"x1/2" BAR, 304 SST	650 LF
6"x1/4" BAR, 304 SST	50 LF

NOTES:

1. CONNECTIONS SHALL BE WELDED, SIZE AND TYPE TO BE DETERMINED DURING DEFINITIVE DESIGN
2. ALL CARBON STEEL SURFACES SHALL BE COATED WITH A SPECIAL PROTECTIVE COATING

CONCEPTUAL DESIGN

BLDG NO.

INDEX NO

THIS SPACE RESERVED FOR BUILDING AND INDEX NUMBERS

DWG NO ES-SHS-S1 SH 1 OF 4 REV 0

FLUOR FEDERAL SERVICES

PROJECT: T-PLANT, SLUDGE HANDLING SYSTEM

NAME / DATE / COMPANY

DRAWN BY RS CHRISTENSEN

U.S. DEPARTMENT OF ENERGY
Richland Operations Office

STRUCTURAL
DRY CELL
CONTAINER RACK/LINER ASSY

SIZE F | BLDG NO 221-T | INDEX NO | DWG NO ES-SHS-S1 | REV 0

SCALE | EDT | SHEET 1 OF 4

DWG NO	TITLE
DRAWING TRACEABILITY LIST	

REF NUMBER	TITLE
ES-SHS-G1	DRAWING LIST & KEY MAP
REFERENCES	
NEXT USED ON END ITEM	

REVISIONS

J-13

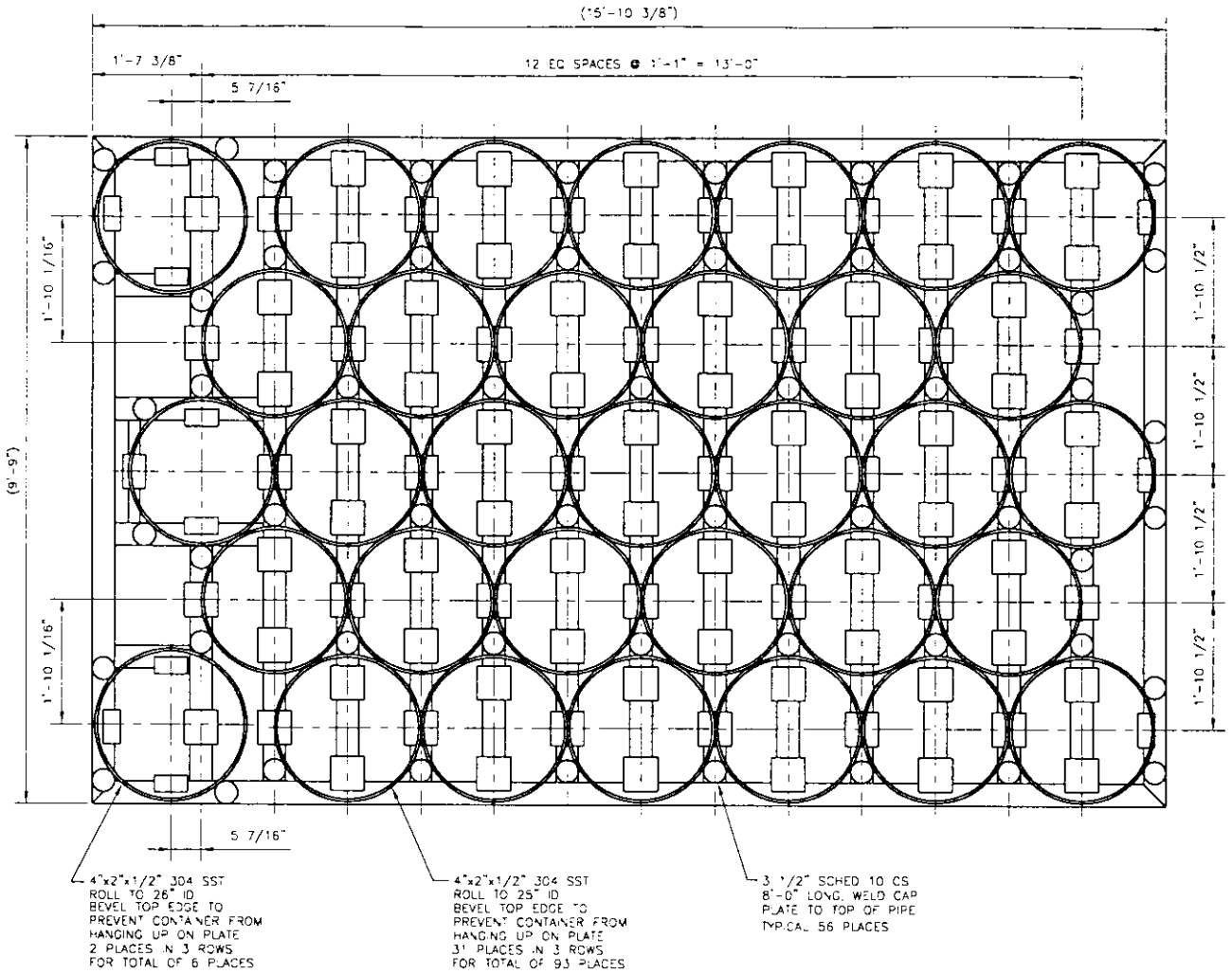

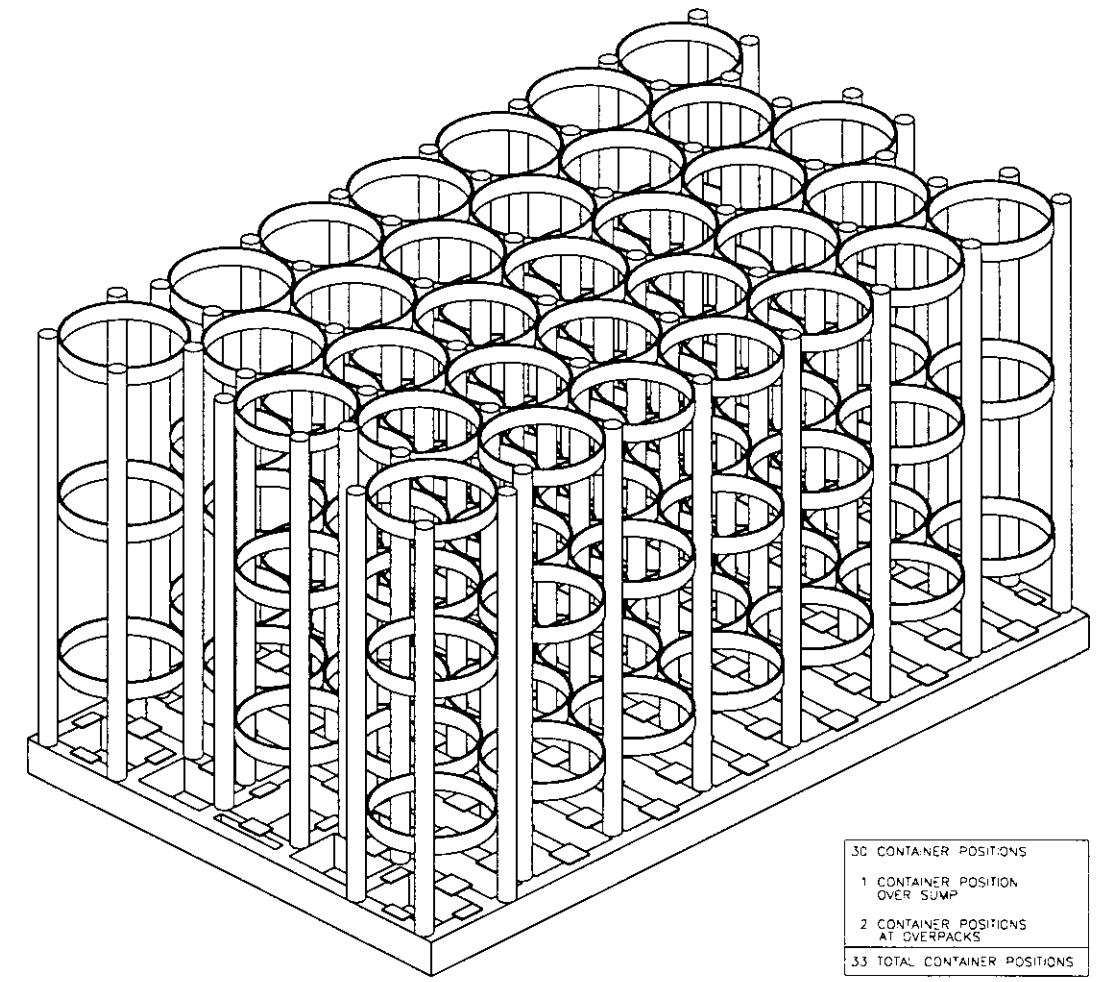

ISOMETRIC VIEW

30 CONTAINER POSITIONS
1 CONTAINER POSITION OVER SUMP
2 CONTAINER POSITIONS AT OVERPACKS
33 TOTAL CONTAINER POSITIONS

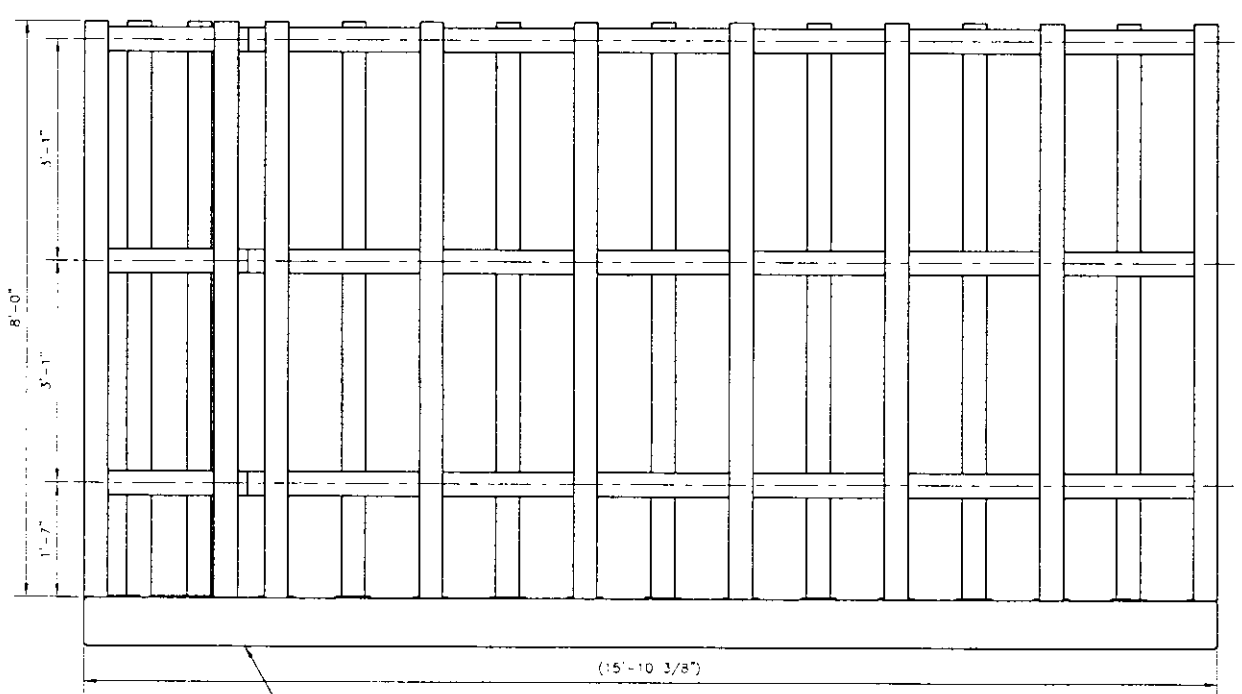

HIDDEN LINES NOT SHOWN FOR CLARITY

1 SH 1 CONTAINER RESTRAINTS
SCALE: 1"=1'-0"

FOR NOTES SEE SHEET 1

CONCEPTUAL DESIGN

FLUOR FEDERAL SERVICES

PROJECT: T-PLANT SLUDGE HANDLING SYSTEM

NAME	DATE	COMPANY
DESIGN ENGINEER		
S.L. CHRISTENSEN		FFS

U.S. DEPARTMENT OF ENERGY
Richland Operations Office

STRUCTURAL
DRY CELL
CONTAINER RESTRAINTS

DWG NO	TITLE
ES-SHS-G1	DRAWING LIST & KEY MAP
REF NUMBER	TITLE

DRAWING TRACEABILITY LIST — REFERENCES — NEXT USED ON — REVISIONS

REV NO	REV DATE	DESCRIPTION	CHGD	COMPUTER

BLDG. NO.
INDEX NO.
THIS SPACE RESERVED FOR BUILDING AND INDEX NUMBERS

DWG NO	REV	SHEET
ES-SHS-S1	0	2 of 4

SIZE	BLDG NO	INDEX NO	DWG NO	REV
F	22-T		ES-SHS-S1	0

SCALE | EST | SHEET 2 OF 4

J-14 1

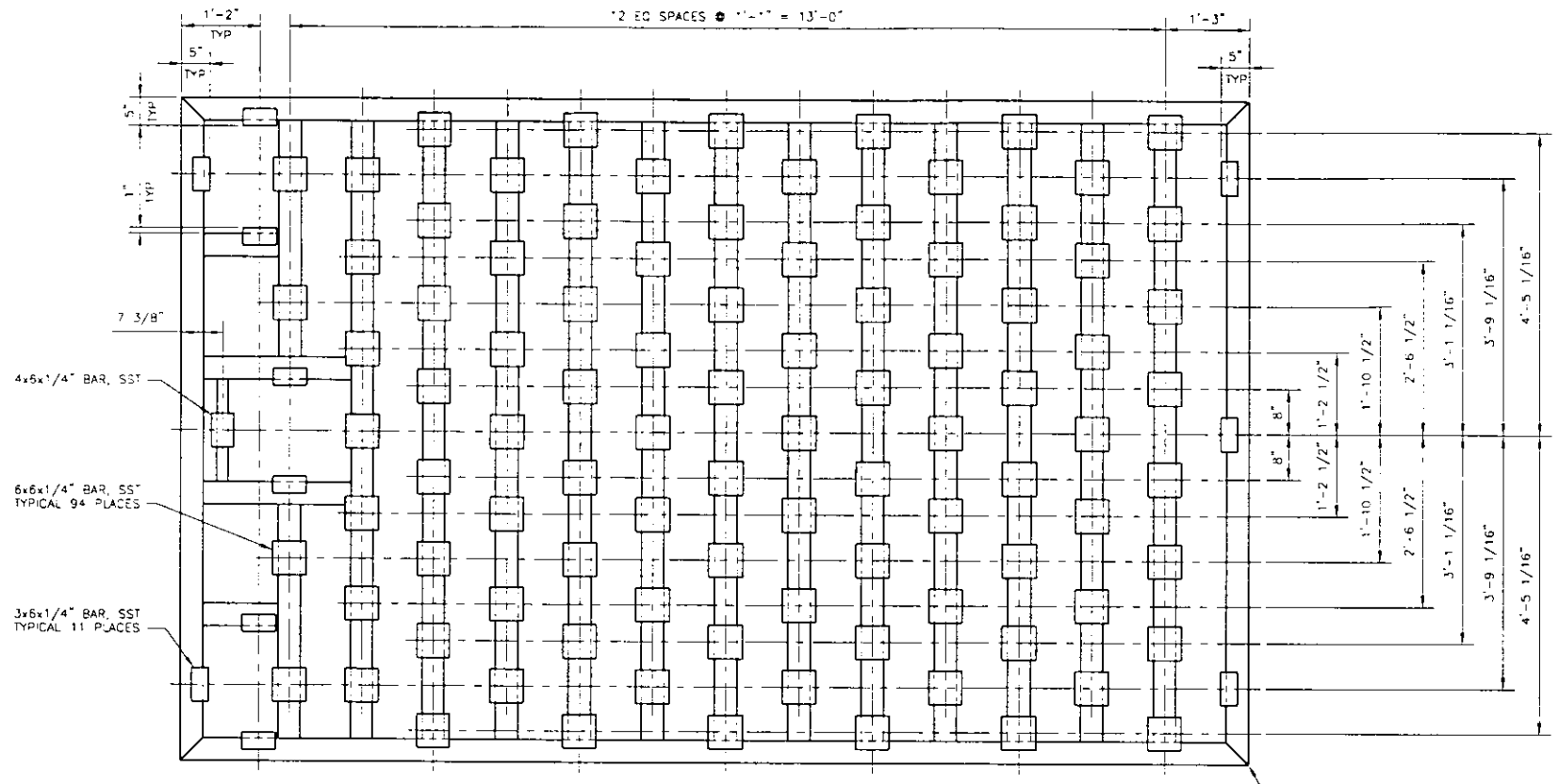

2 CONTAINER SUPPORT FRAME
SH 1 & SH 2 SCALE: 1"=1'-0"

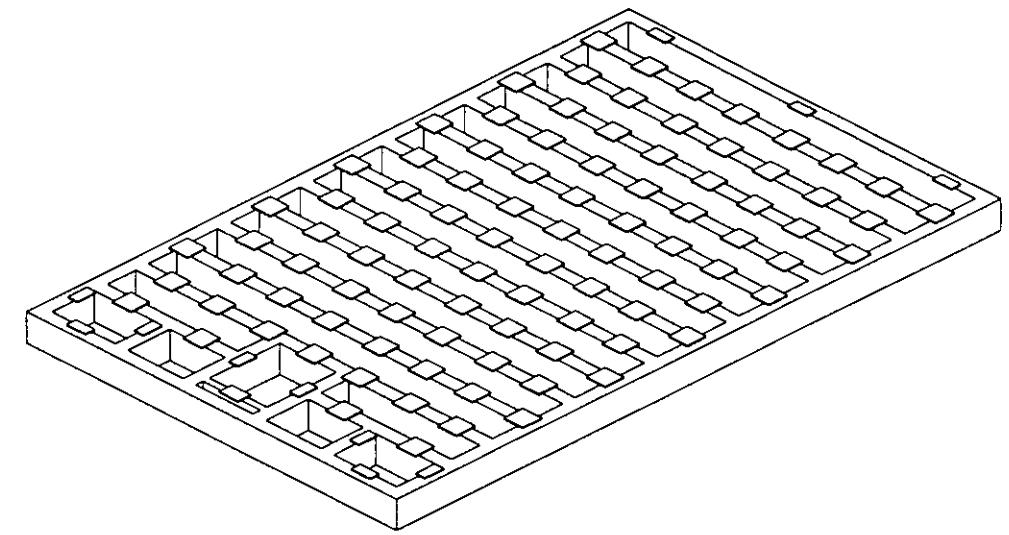

ISOMETRIC VIEW

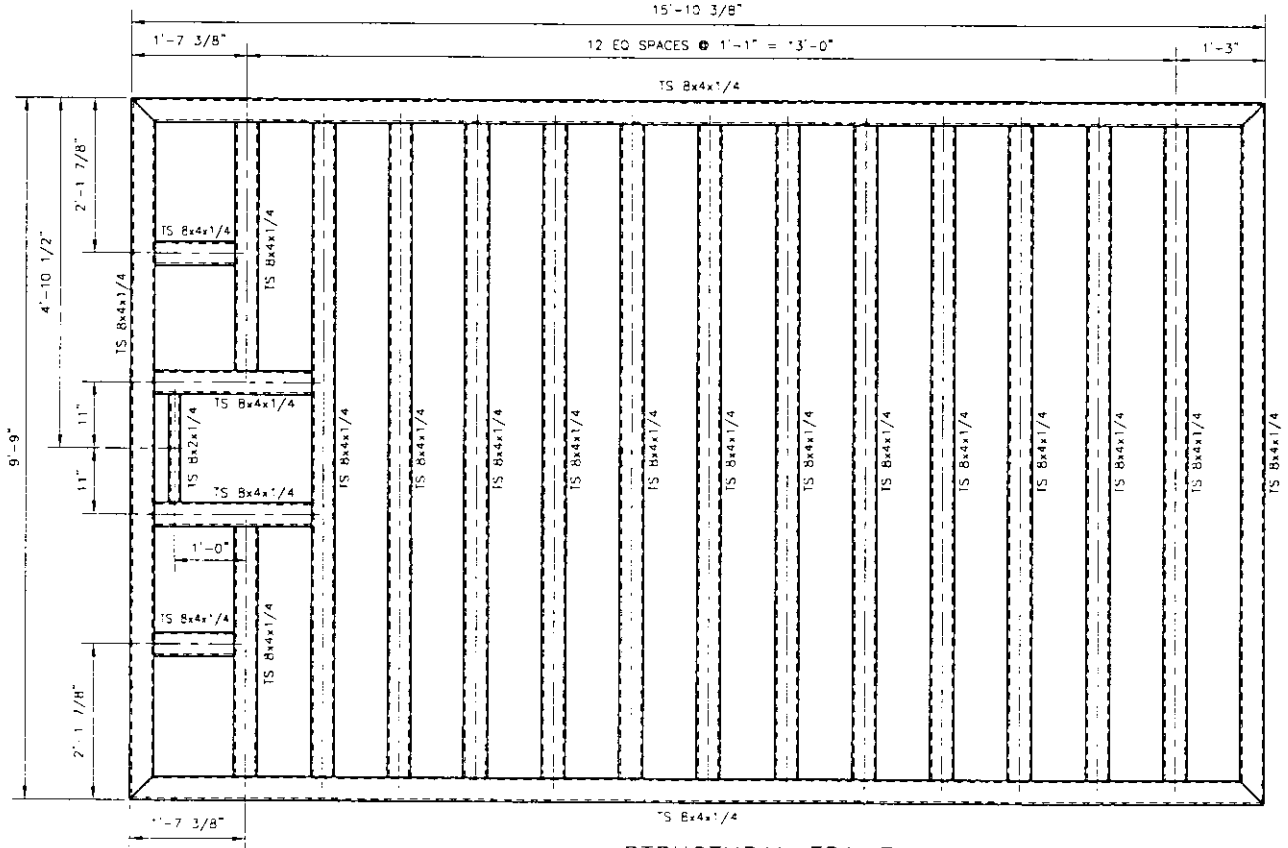

STRUCTURAL FRAME
SCALE: 1"=1'-0"
NOTE: ALL TS IS CS

FOR NOTES SEE SHEET 1

CONCEPTUAL DESIGN

FLUOR FEDERAL SERVICES

PROJECT: T-PLANT, SLUDGE HANDLING SYSTEM

U.S. DEPARTMENT OF ENERGY
Richland Operations Office

STRUCTURAL
DRY CELL
CONTAINER SUPPORT FRAME

ES-SHS-S1 0

DWG NO	TITLE	REF NUMBER	TITLE
		ES-SHS-01	DRAWING LIST & KEY MAP

DRAWING TRACEABILITY LIST — REFERENCES — NEXT USED ON END ITEM — REVISIONS

J-15 1

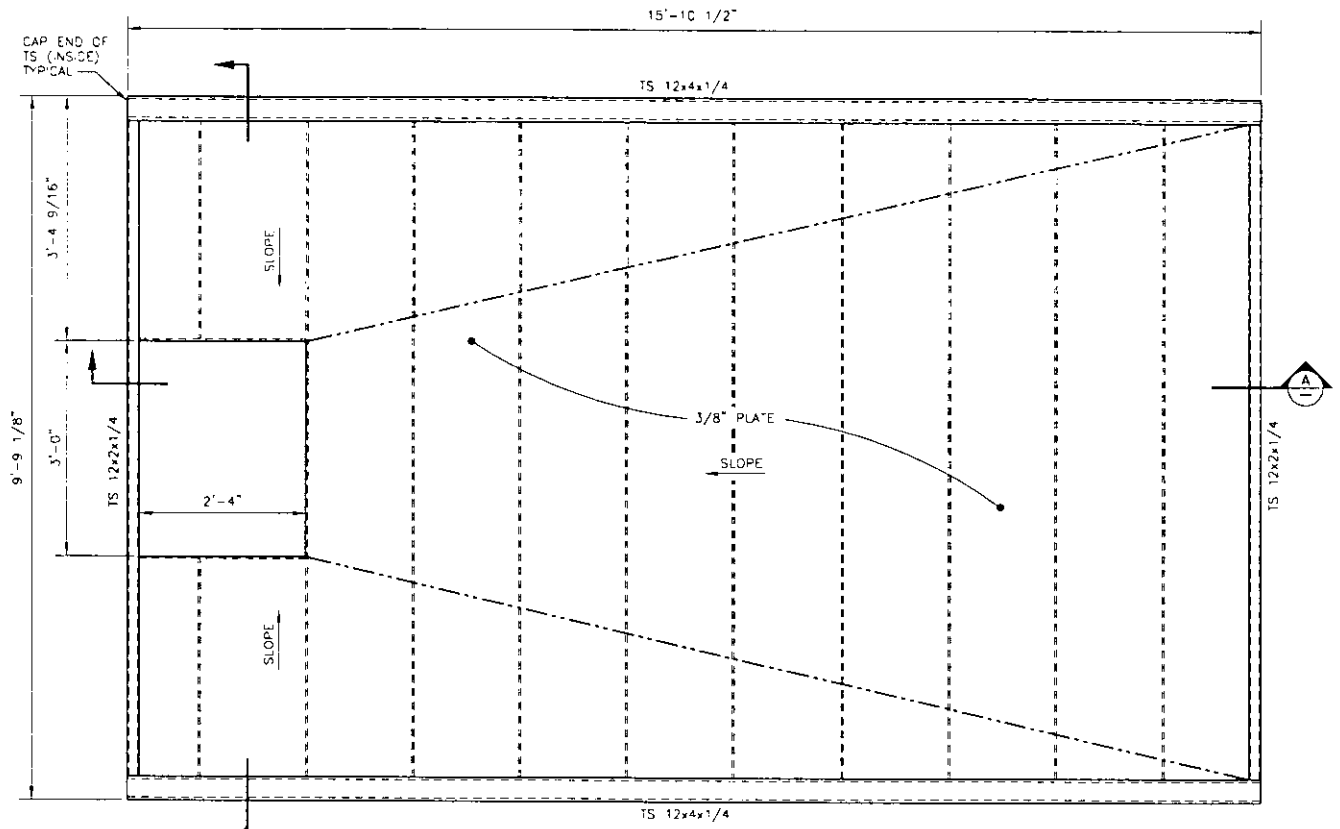

3 / SH 1 LINER BASE FRAME
SCALE: 1"=1'-0"
NOTE: ALL MATERIAL IS CS

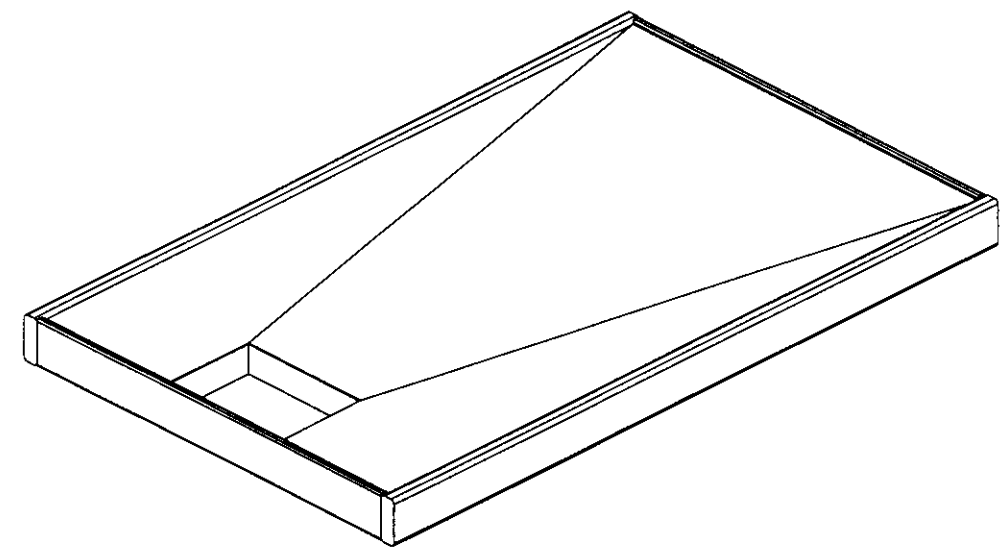

ISOMETRIC VIEW

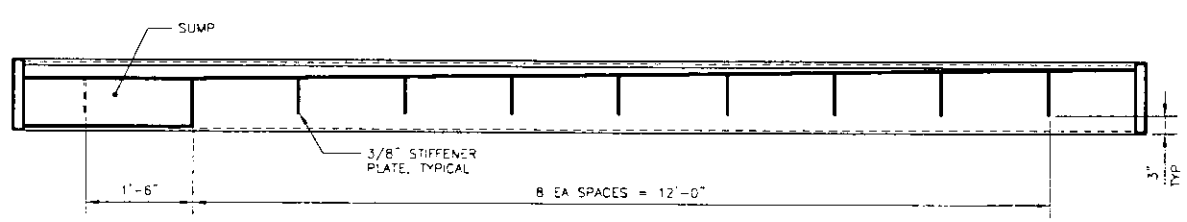

A SECTION
SCALE: 1/2"=1'-0"

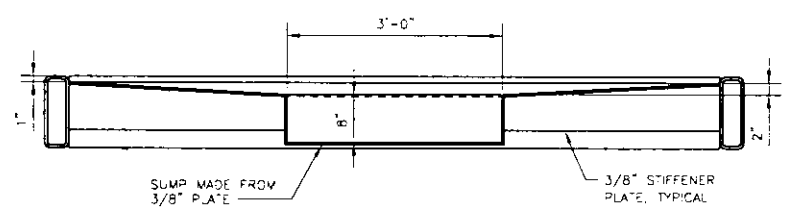

B SECTION
SCALE: 1/2"=1'-0"

FOR NOTES SEE SHEET 1

CONCEPTUAL DESIGN

FLUOR FEDERAL SERVICES

PROJECT: T-PLANT, SLUDGE HANDLING SYSTEM

NAME: RS CHRISTENSEN

U.S. DEPARTMENT OF ENERGY
Richland Operations Office

STRUCTURAL
DRY CELL
LINER BASE FRAME

SIZE F | BLDG NO 221-T | INDEX NO | DWG NO ES-SHS-S1 | REV 0

SCALE | CDF | SHEET 4 OF 4

BLDG. NO.
INDEX NO.
THIS SPACE RESERVED FOR BUILDING AND INDEX NUMBERS

DWG NO	TITLE
DRAWING TRACEABILITY LIST	

REF NUMBER	TITLE
ES-SHS-G1	DRAWING LIST & KEY MAP
REFERENCES	
NEXT USED ON END ITEM	

REVISIONS

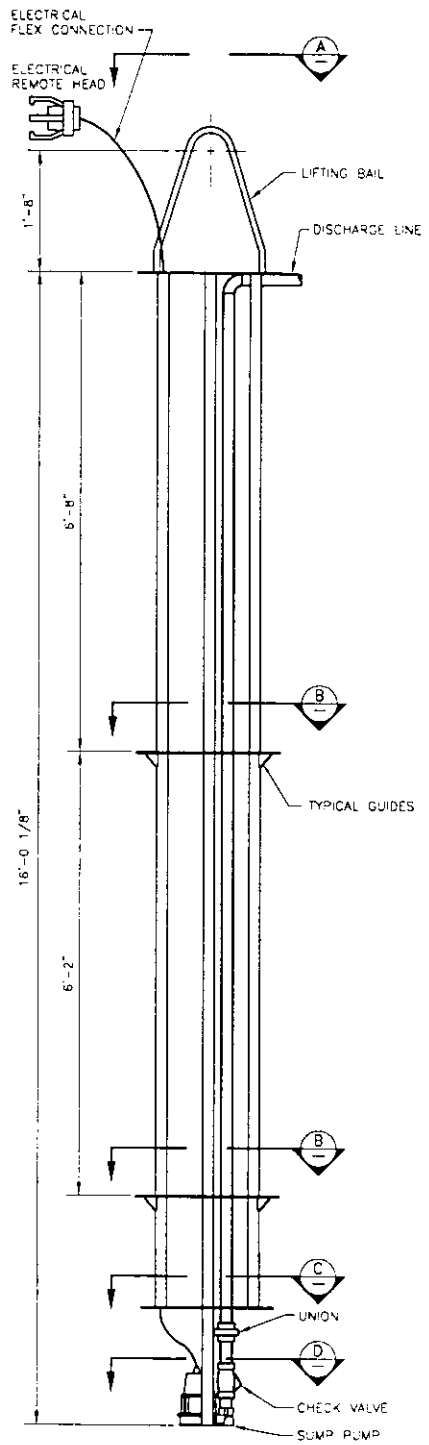

SUMP PUMP SUPPORT
SCALE 1"=1'-0"

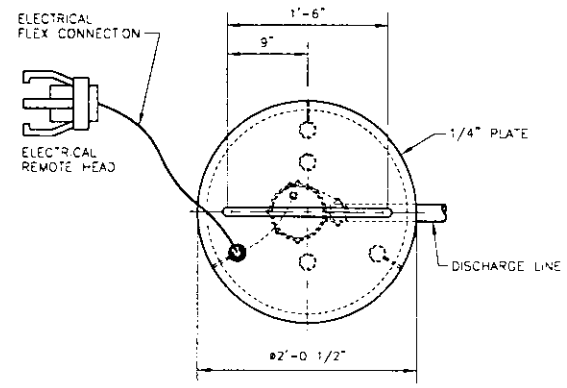

A SECTION
SCALE: 1 1/2"=1'-0"

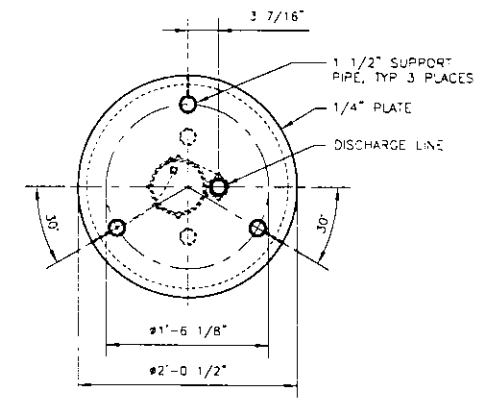

B SECTION
SCALE: 1 1/2"=1'-0"

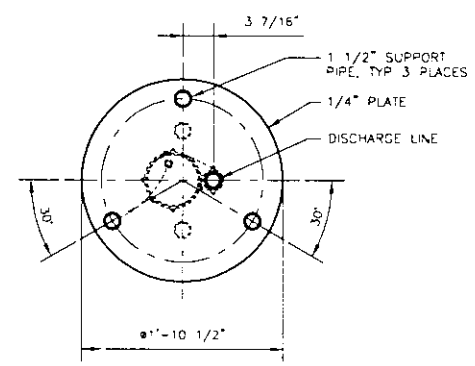

C SECTION
SCALE: 1 1/2"=1'-0"

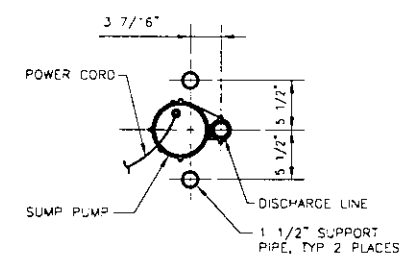

D SECTION
SCALE: 1 1/2"=1'-0"

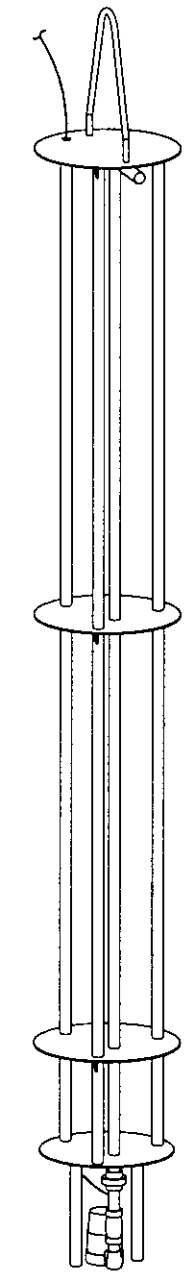

ISOMETRIC VIEW

NOTES:

1. CONNECTIONS SHALL BE WELDED SIZE AND TYPE TO BE DETERMINED DURING DEFINITIVE DESIGN
2. ALL CARBON STEEL SURFACES SHALL BE COATED WITH A SPECIAL PROTECTIVE COATING

CONCEPTUAL DESIGN

FLUOR FEDERAL SERVICES

PROJECT: T-PLANT, SLUDGE HANDLING SYSTEM

NAME: RS CHRISTENSEN

U.S. DEPARTMENT OF ENERGY
Richland Operations Office

STRUCTURAL
DRY CELL
SUMP PUMP SUPPORT

SIZE F | BLDG NO 221-1 | INDEX NO | DWG NO ES-SHS-S2 | REV 0

SCALE | SHEET 1 OF 1

DWG NO	TITLE
DRAWING TRACEABILITY LIST	

REF NUMBER	TITLE
ES-SHS-G1	DRAWING LIST & KEY MAP
REFERENCES	
NEXT USED ON END ITEM	

REVISIONS

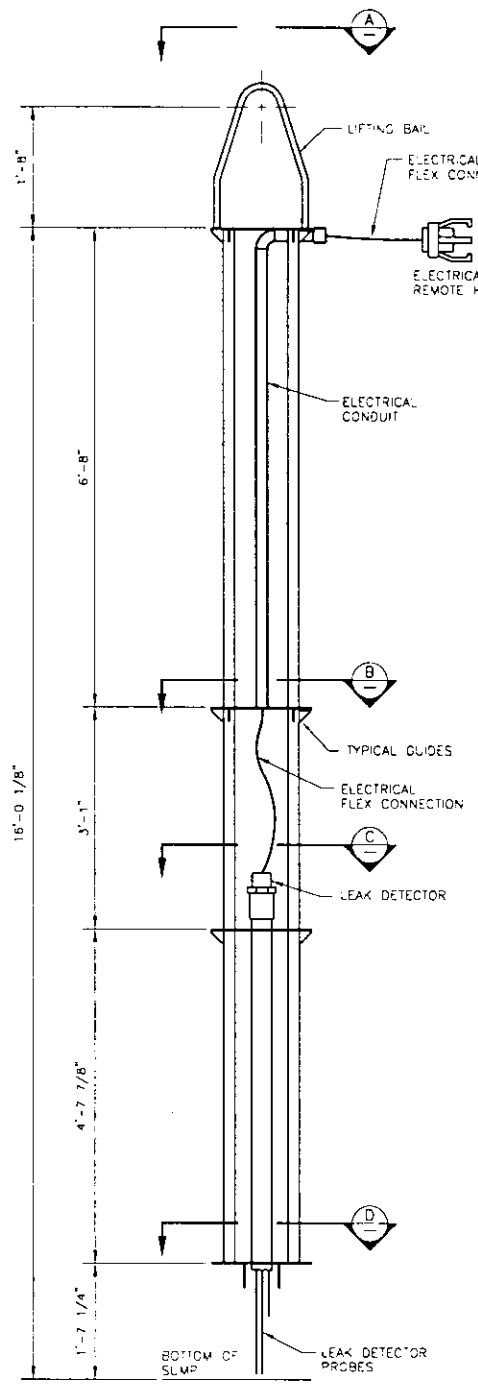

LEAK DETECTOR SUPPORT
SCALE 1"=1'-0"

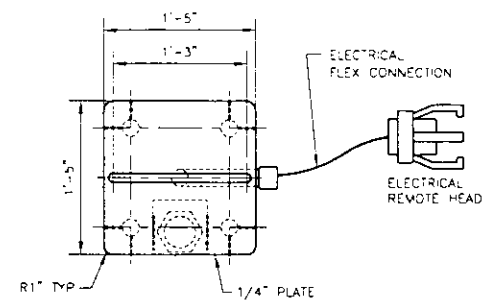

A SECTION
SCALE: 1 1/2"=1'-0"

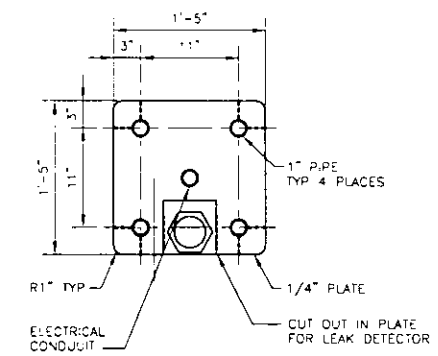

B SECTION
SCALE: 1 1/2"=1'-0"

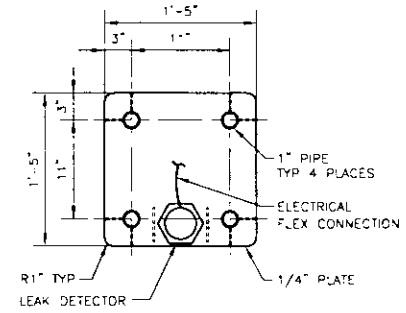

C SECTION
SCALE 1 1/2"=1'-0"

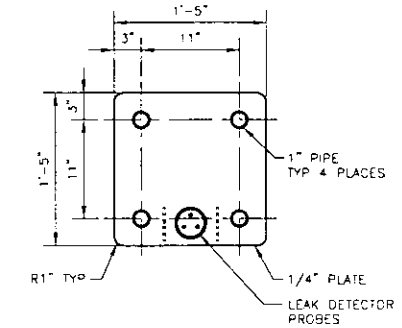

D SECTION
SCALE: 1 1/2"=1'-0"

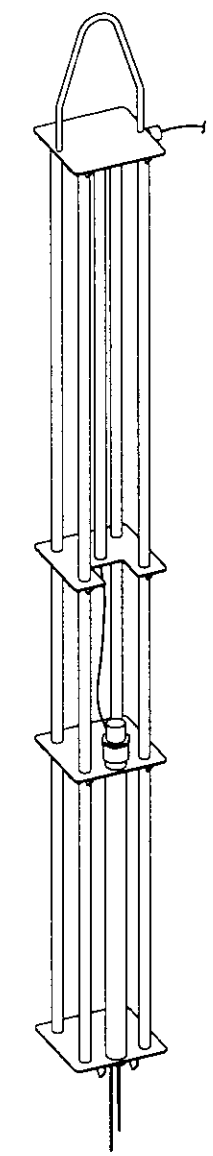

ISOMETRIC VIEW

NOTES:

1. CONNECTIONS SHALL BE WELDED. SIZE AND TYPE TO BE DETERMINED DURING DEFINITIVE DESIGN
2. ALL CARBON STEEL SURFACES SHALL BE COATED WITH A SPECIAL PROTECTIVE COATING.

CONCEPTUAL DESIGN

FLUOR FEDERAL SERVICES

PROJECT T-PLANT, SLUDGE HANDLING SYSTEM

NAME	DATE	COMPANY
DRAWN BY RS CHRISTENSEN		

U.S. DEPARTMENT OF ENERGY
Richland Operations Office

STRUCTURAL
DRY CELL
LEAK DETECTOR SUPPORT

SIZE F | BLDG NO 221-T | INDEX NO | DWG NO ES-SHS-S3 | REV 0

SCALE | COP | SHEET 1 OF 1

DWG NO	TITLE
ES-SHS-G1	DRAWING LIST & KEY MAP
REF NUMBER	TITLE
REFERENCES	
NEXT USED ON END ITEM	

DRAWING TRACEABILITY LIST

REVISIONS

THIS SPACE RESERVED FOR BUILDING AND INDEX NUMBERS

BLDG NO.

INDEX NO

DWG NO ES-SHS-S3 | SH 1 OF 1 | REV 0

J-18 1

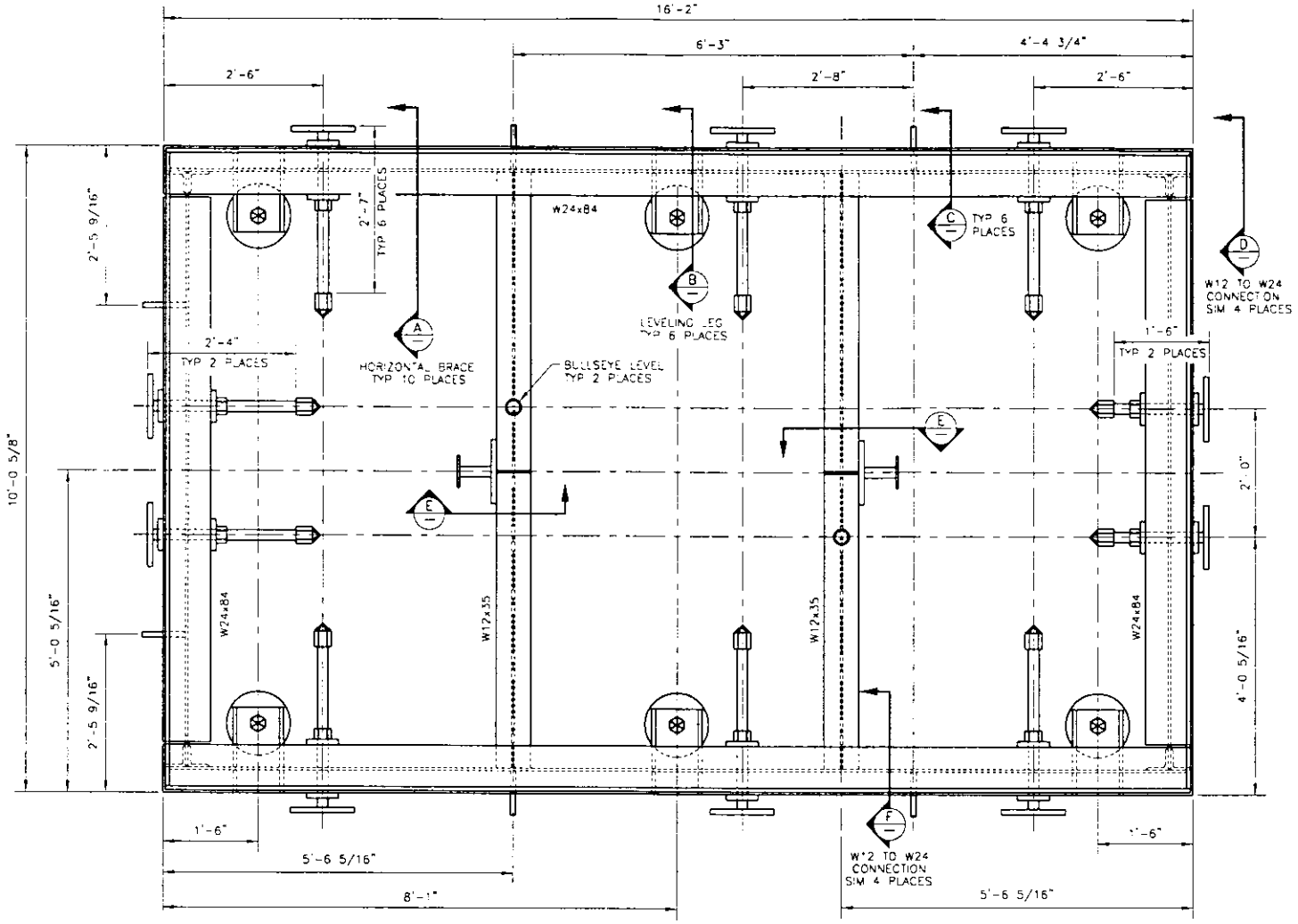

LEVELING BASE SUPPORT
SCALE: 1"=1'-0"

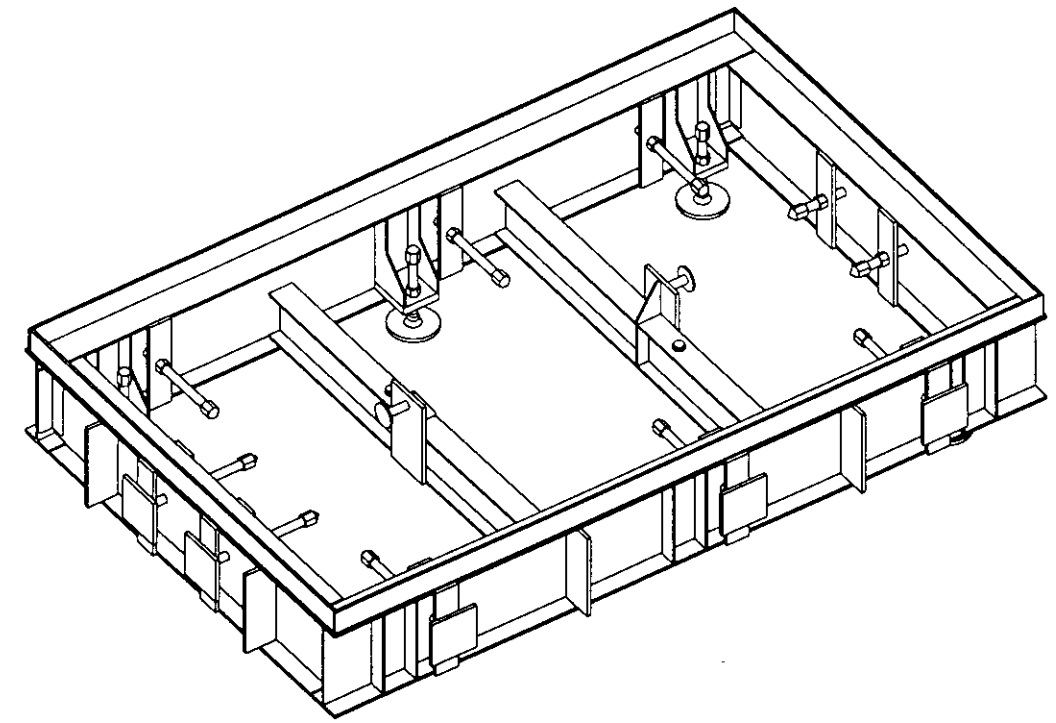

ISOMETRIC VIEW
APPROX WEIGHT: 8,000 LBS

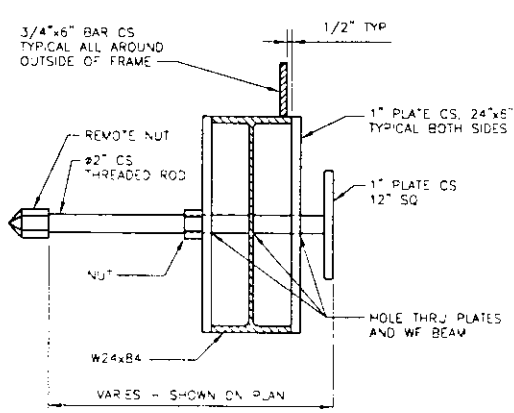

A SECTION
SCALE: 1 1/2"=1'-0"

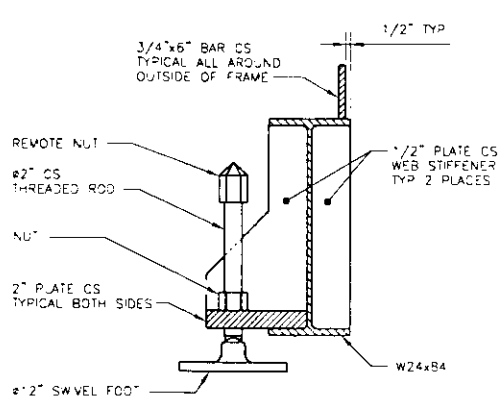

B SECTION
SCALE: 1 1/2"=1'-0"

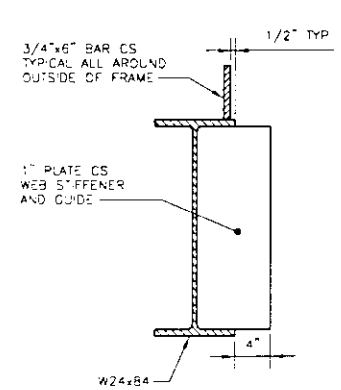

C SECTION
SCALE: 1 1/2"=1'-0"

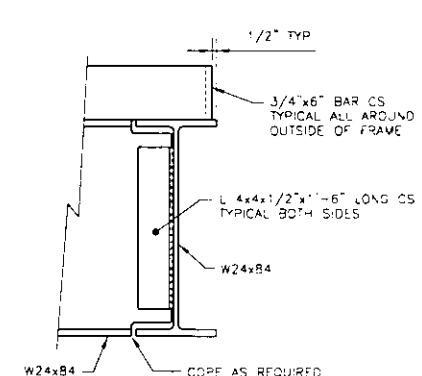

D SECTION
SCALE: 1 1/2"=1'-0"

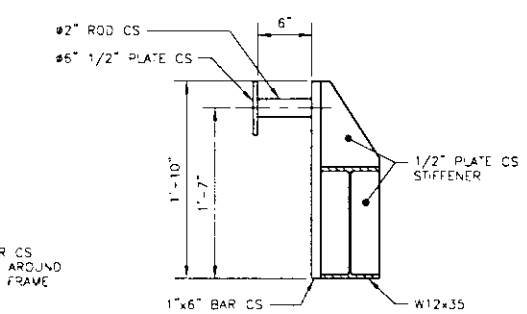

E SECTION
SCALE: 1 1/2"=1'-0"

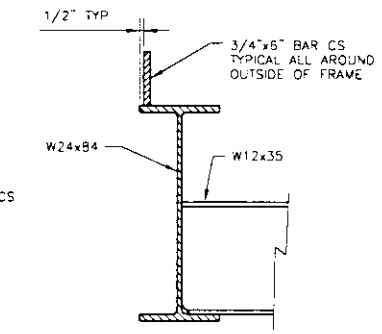

F SECTION
SCALE: 1 1/2"=1'-0"

NOTES:

1. CONNECTIONS SHALL BE WELDED. SIZE AND TYPE TO BE DETERMINED DURING DEFINITIVE DESIGN.
2. ALL CARBON STEEL SURFACES SHALL BE COATED WITH A SPECIAL PROTECTIVE COATING.

CONCEPTUAL DESIGN

BLDG NO.
INDEX NO.
THIS SPACE RESERVED FOR BUILDING AND INDEX NUMBERS

FLUOR FEDERAL SERVICES

PROJECT: T-PLANT, SLUDGE HANDLING SYSTEM

NAME	DATE	COMPANY
DRAWN BY RS CHRISTENSEN		

U.S. DEPARTMENT OF ENERGY
Richland Operations Office

STRUCTURAL
DRY CELL
LEVELING BASE SUPPORT

SIZE F | BLDG NO 221-T | INDEX NO | DWG NO ES-SHS-S4 | REV 0
SCALE | CSI | SHEET 1 OF 1

DWG NO	TITLE
DRAWING TRACEABILITY LIST	

REF NUMBER	TITLE
ES-SHS-G1	DRAWING LIST & KEY MAP
REFERENCES	
NEXT USED ON END ITEM	

REV NO	DESCRIPTION	REV DATE	CHECK COMPANY
REVISIONS			

DESIGN AUTHORITY

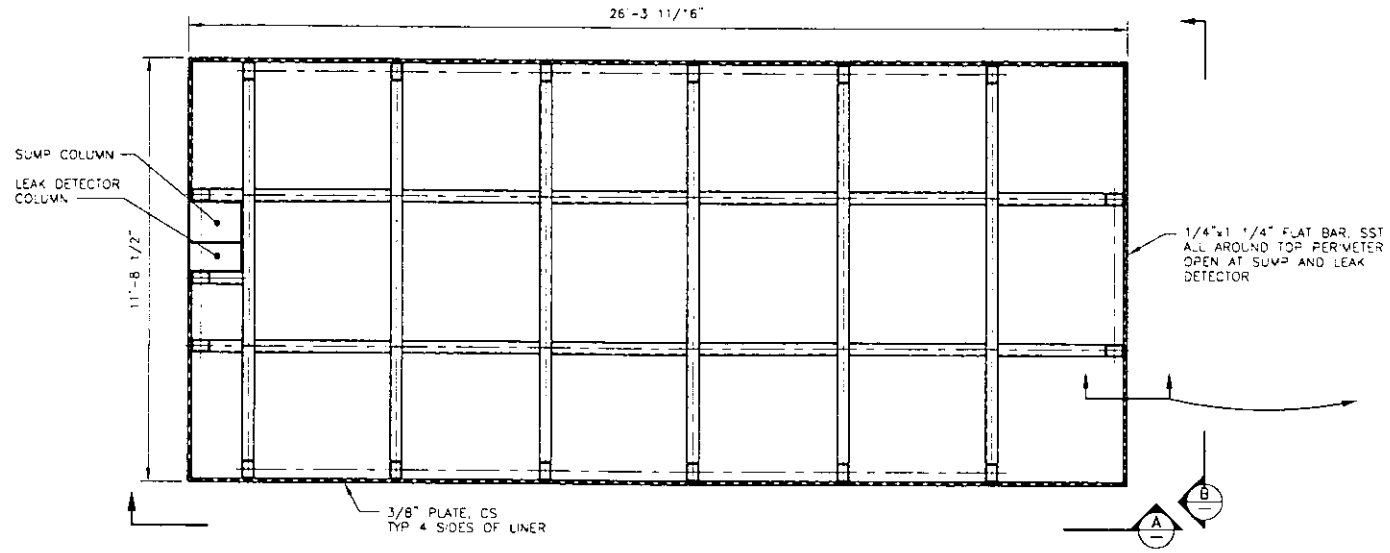

ALL HIDDEN LINES ARE NOT SHOWN FOR CLARITY

TYPE 2 CONTAINER – LINER ASSEMBLY

SCALE: 1/2"=1'-0"

APPROX WEIGHT: 78,000 LBS

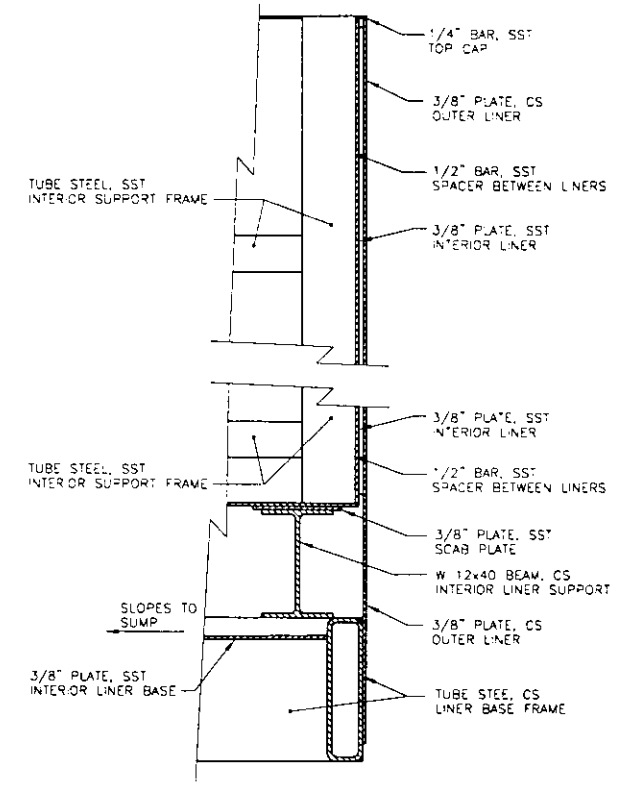

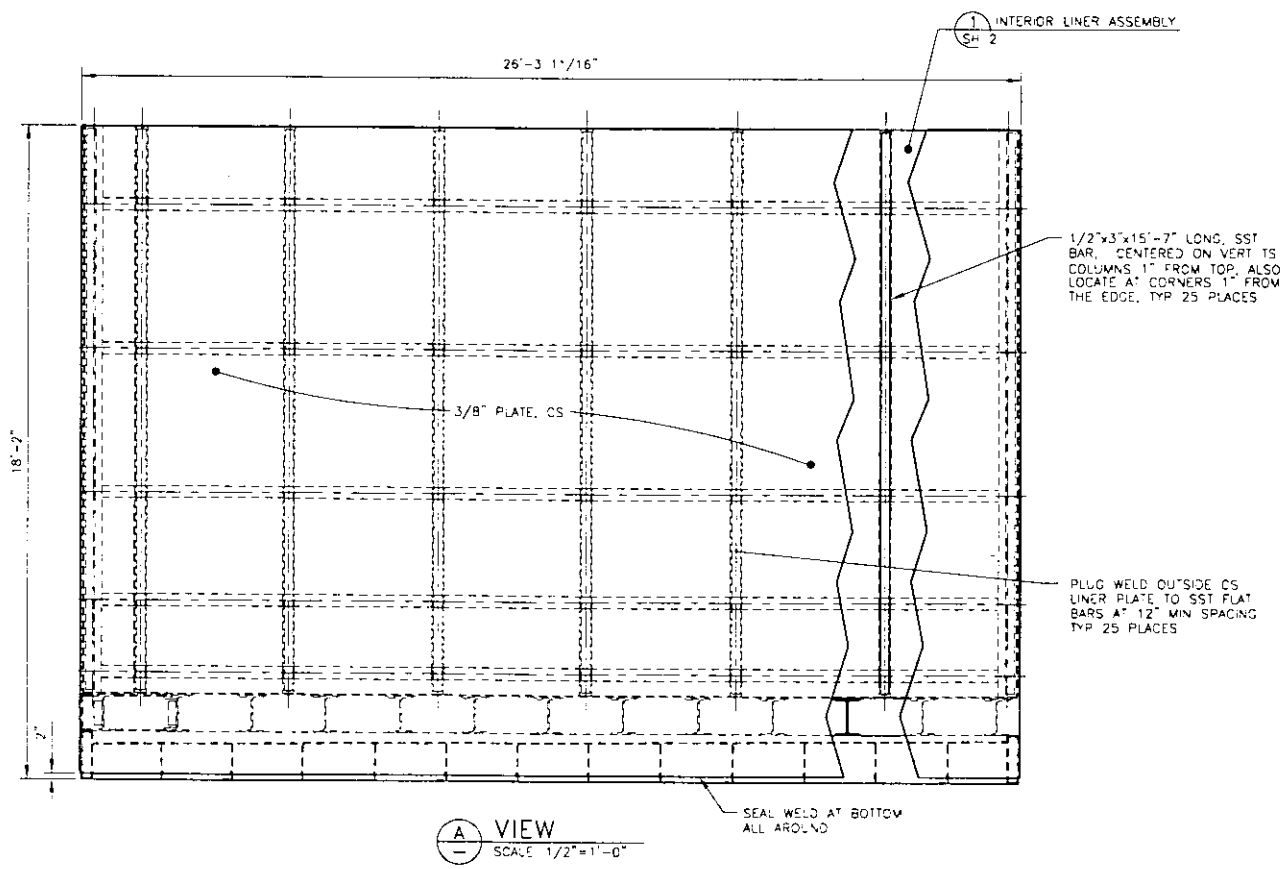

A VIEW
SCALE 1/2"=1'-0"

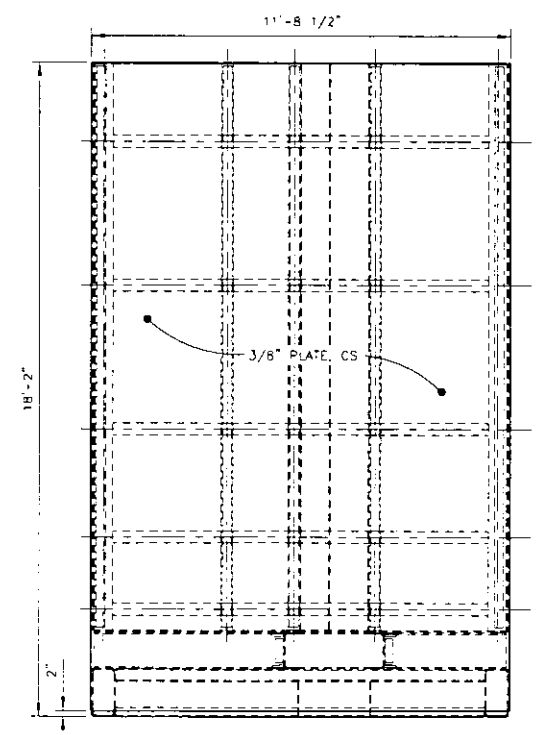

B SECTION
SCALE 1/2"=1'-0"

NOTES:

1. LIFTING BRACKETS FOR LINER ARE NOT SHOWN. A MINIMUM OF 4 LIFTING POINTS SHALL BE PROVIDED PLACED AS REQUIRED TO BALANCE FRAME.
2. ALL CARBON STEEL SURFACES SHALL BE COATED WITH A SPECIAL PROTECTIVE COATING.
3. CONNECTIONS SHALL BE WELDED. SIZE AND TYPE TO BE DETERMINED DURING DEFINITIVE DESIGN.

BILL OF MATERIAL	
W 12x40, CS	150.0 LF
TS 16x8x1/2, CS	52.5 LF
TS 16x4x1/2, CS	20.7 LF
TS 6x4x1/4, SST	267.8 LF
TS 4x4x1/4, SST	236.7 LF
L 3x3x3/8, CS	126.7 LF
1/2"x3" FLAT BAR, SST	389.6 LF
1/4"x1 1/4" FLAT BAR, SST	74.0 LF
3/8"x10" FLAT BAR, SST	150.0 LF
3/8" PLATE, CS	1785.1 SQ FT
3/8" PLATE, SST	1356.9 SQ FT

CONCEPTUAL DESIGN

FLUOR FEDERAL SERVICES

PROJECT: T-PLANT, SLUDGE HANDLING SYSTEM

NAME / DATE / COMPANY
DRAWN BY: RS CHRISTENSEN

U.S. DEPARTMENT OF ENERGY
Richland Operations Office

STRUCTURAL WET CELL LINER ASSEMBLY

SIZE F | BLDG NO 221-T | INDEX NO | DWG NO ES-SHS-S5 | REV 0

SCALE | EDT | SHEET 1 OF 4

DESIGN AUTHORITY

DWG NO	TITLE
ES-SHS-G1	DRAWING LIST & KEY MAP
REF NUMBER	TITLE
REFERENCES	
NEXT USED ON	END ITEM

DRAWING TRACEABILITY LIST

REVISIONS

THIS SPACE RESERVED FOR BUILDING AND INDEX NUMBERS

BLDG NO. | INDEX NO. | DWG NO ES-SHS-S5 | REV 0

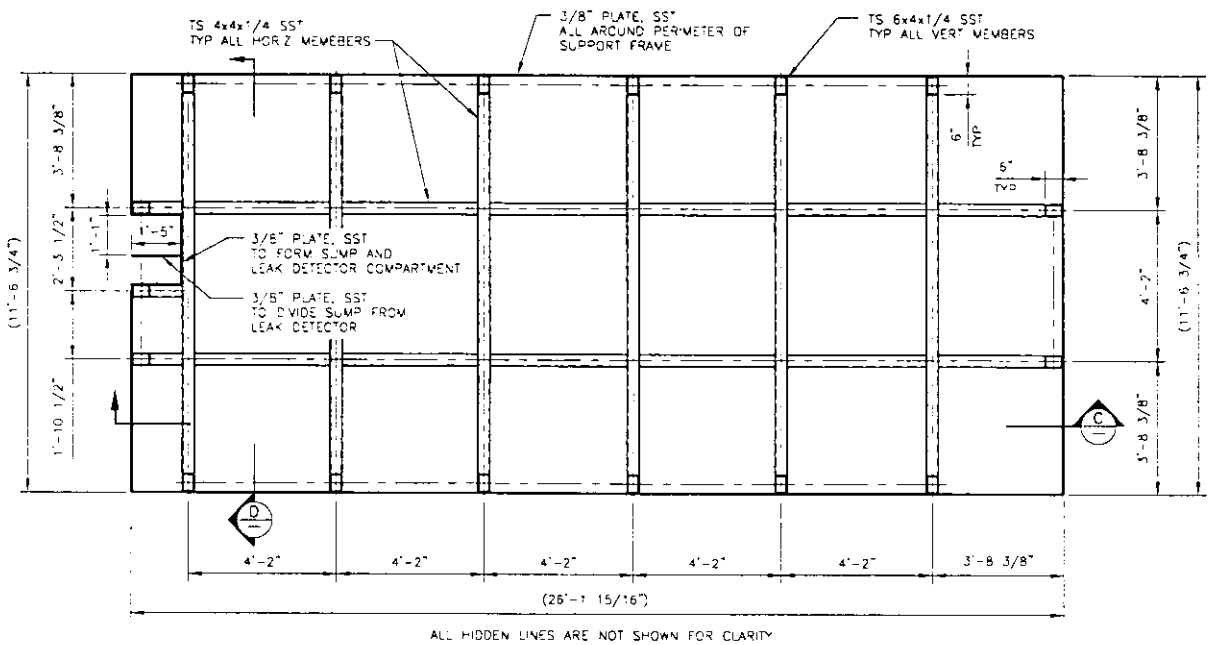

ALL HIDDEN LINES ARE NOT SHOWN FOR CLARITY

1 SH 1 INTERIOR LINER ASSEMBLY
SCALE: 1/2"=1'-0"

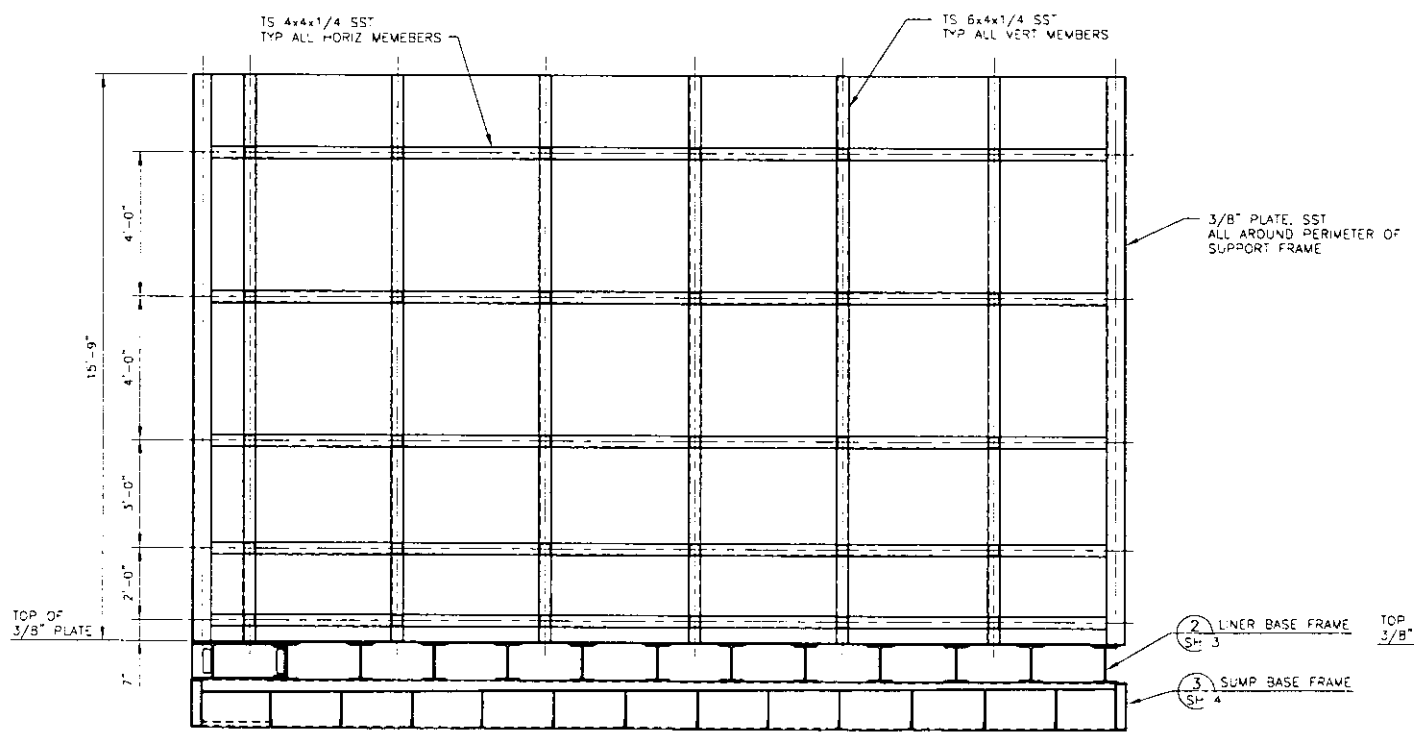

C SECTION
SCALE: 1/2"=1'-0"

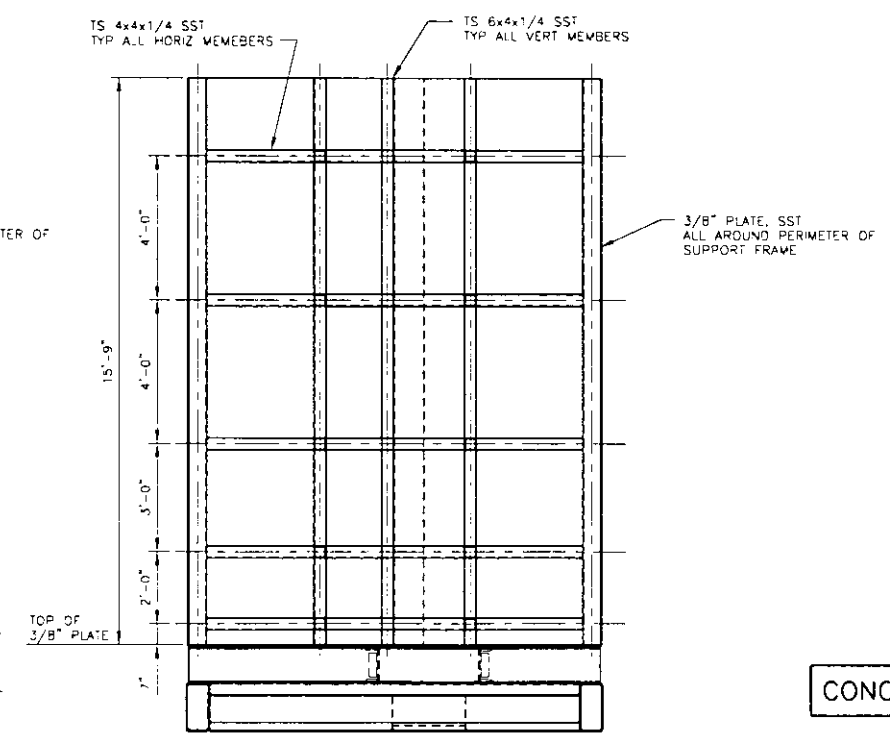

D SECTION
SCALE: 1/2"=1'-0"

CONCEPTUAL DESIGN

FOR NOTES SEE SHEET 1

THIS SPACE RESERVED FOR BUILDING AND INDEX NUMBERS

BLDG NO

INDEX NO

DWG NO ES-SHS-S5 REV 0

FLUOR FEDERAL SERVICES

PROJECT: T-PLANT, SLUDGE HANDLING SYSTEM

NAME	DATE	COMPANY
RS CHRISTENSEN		

U.S. DEPARTMENT OF ENERGY
Richland Operations Office

STRUCTURAL
WET CELL LINER
INTERIOR FRAME ASSEMBLY

SIZE F | SCALE | TOP | SHEET 2 OF 4 | DWG NO ES-SHS-S5 | REV 0

DWG NO	TITLE
DRAWING TRACEABILITY LIST	

REF NUMBER	TITLE
ES-SHS-G1	DRAWING LIST & KEY MAP
REFERENCES	
NEXT USED ON END ITEM	

REV NO	DESCRIPTION	REV DATE	CHKD COMPANY
REVISIONS			

DESIGN AUTHORITY

J-21 1

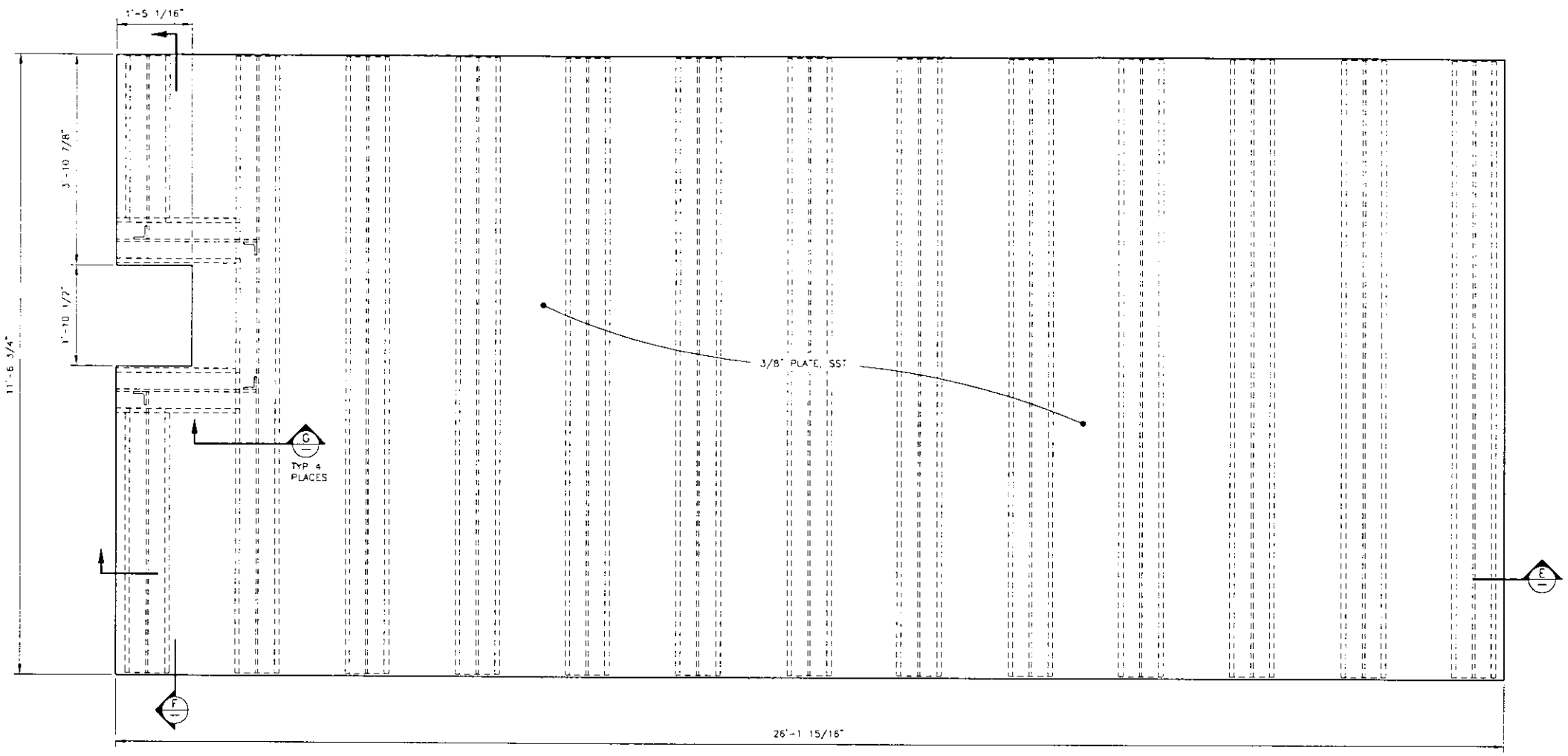

2 SH 2 LINER BASE FRAME
SCALE: 1"=1'-0"
NOTE: ALL MATERIAL IS CS UNLESS NOTED OTHERWISE

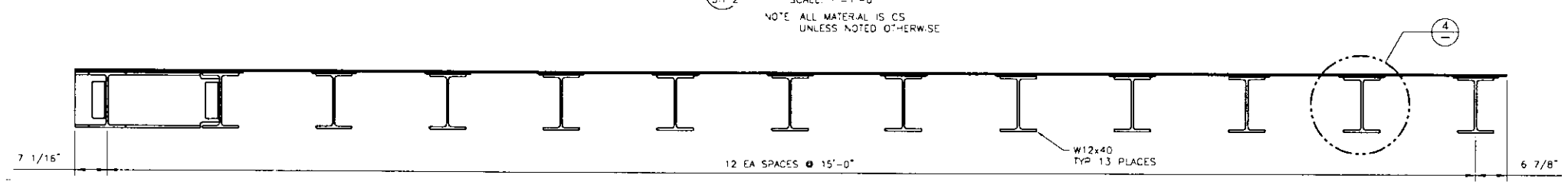

E SECTION
SCALE: 1"=1'-0"

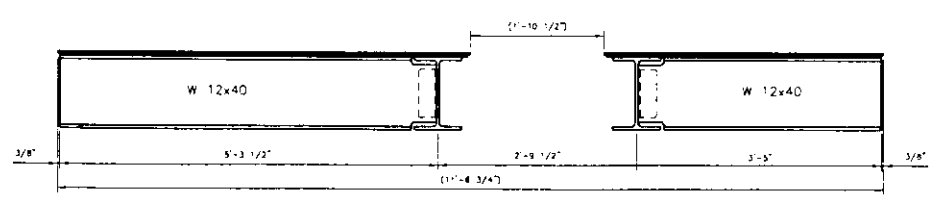

F SECTION
SCALE: 1"=1'-0"

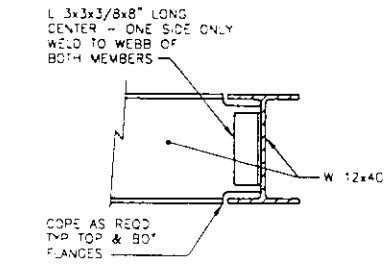

TYPICAL BEAM TO BEAM CONNECTION

G SECTION
SCALE: 1 1/2"=1'-0"

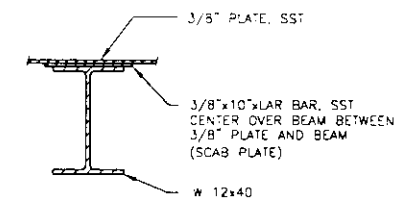

TYPICAL BEAM TO PLATE CONNECTION

4 DETAIL
SCALE: 1 1/2"=1'-0"

CONCEPTUAL DESIGN

FOR NOTES SEE SHEET 1

FLUOR FEDERAL SERVICES

PROJECT: T-PLANT, SLUDGE HANDLING SYSTEM

NAME: RS CHRISTENSEN

U.S. DEPARTMENT OF ENERGY
Richland Operations Office

STRUCTURAL
WET CELL LINER
BASE FRAME

F | ES-SHS-S5 | 0

BLDG. NO. | INDEX NO. | DWG NO ES-SHS-S5 | SH 3 OF 4 | REV 0

DWG NO	TITLE
DRAWING TRACEABILITY LIST	

REF NUMBER	TITLE
ES-SHS-G1	DRAWING LIST & KEY MAP
REFERENCES	
NEXT USED ON END ITEM	

REVISIONS

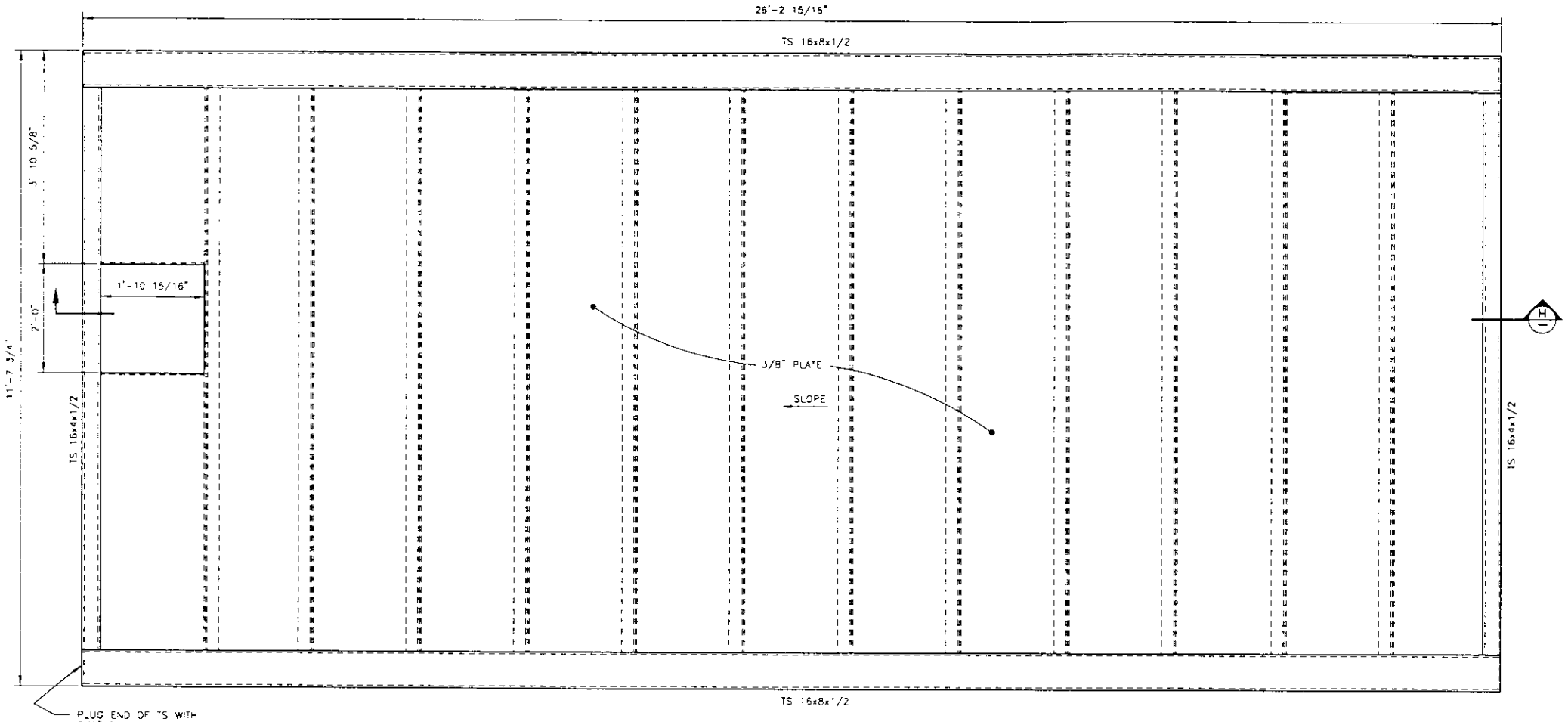

3 SH 2 SUMP BASE FRAME
SCALE 1"=1'-0"
NOTE: ALL MATERIAL IS CS

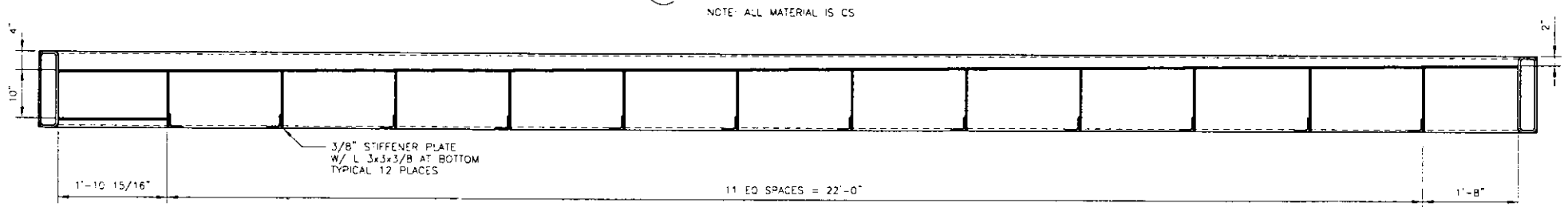

H SECTION
SCALE: 1"=1'-0"

CONCEPTUAL DESIGN

FOR NOTES SEE SHEET 1

FLUOR FEDERAL SERVICES

PROJECT: T-PLANT, SLUDGE HANDLING SYSTEM

NAME	DATE	COMPANY
DESIGNED BY RS CHRISTENSEN		

U.S. DEPARTMENT OF ENERGY
Richland Operations Office

STRUCTURAL
WET CELL LINER
SUMP BASE FRAME

REV F | BLDG. NO. 221-T | INDEX NO. | DWG. NO. ES-SHS-S5 | REV. 0

SCALE | EST | SHEET 4 OF 4

BLDG. NO.

INDEX NO.

THIS SPACE RESERVED FOR BENCHMARK AND INDEX NUMBERS

REV 0 | 4 | 9 | 4 | ES-SHS-S5 | DWG NO

DRAWING TRACEABILITY LIST

DWG NO	TITLE
ES-SHS-S1	DRAWING LIST & KEY MAP

REF NUMBER	TITLE
REFERENCES	
NEXT USED ON END ITEM	

REVISIONS

REV NO	DESCRIPTION	REV BY	CHKD	COMPANY

DESIGN AUTHORITY

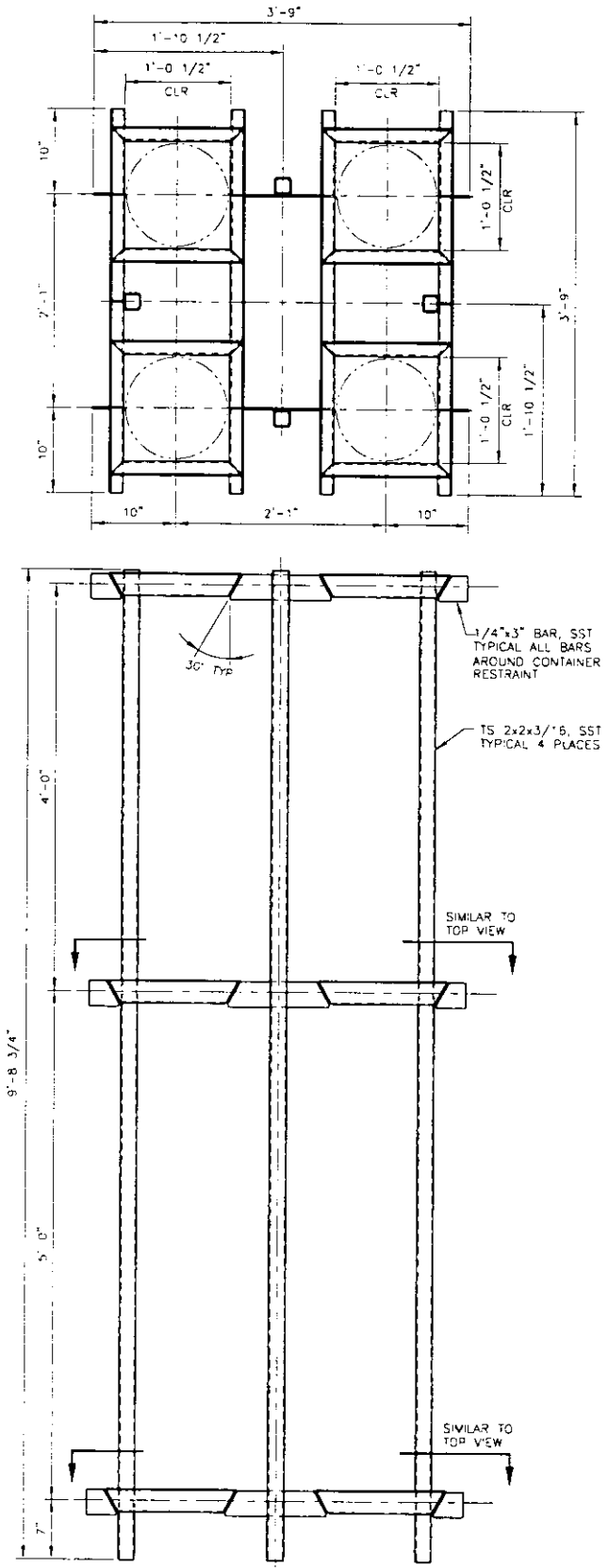

1 CONTAINER RACK #1
SCALE: 1/8
WEIGHT: 230 LBS
TYP 5 PLACES

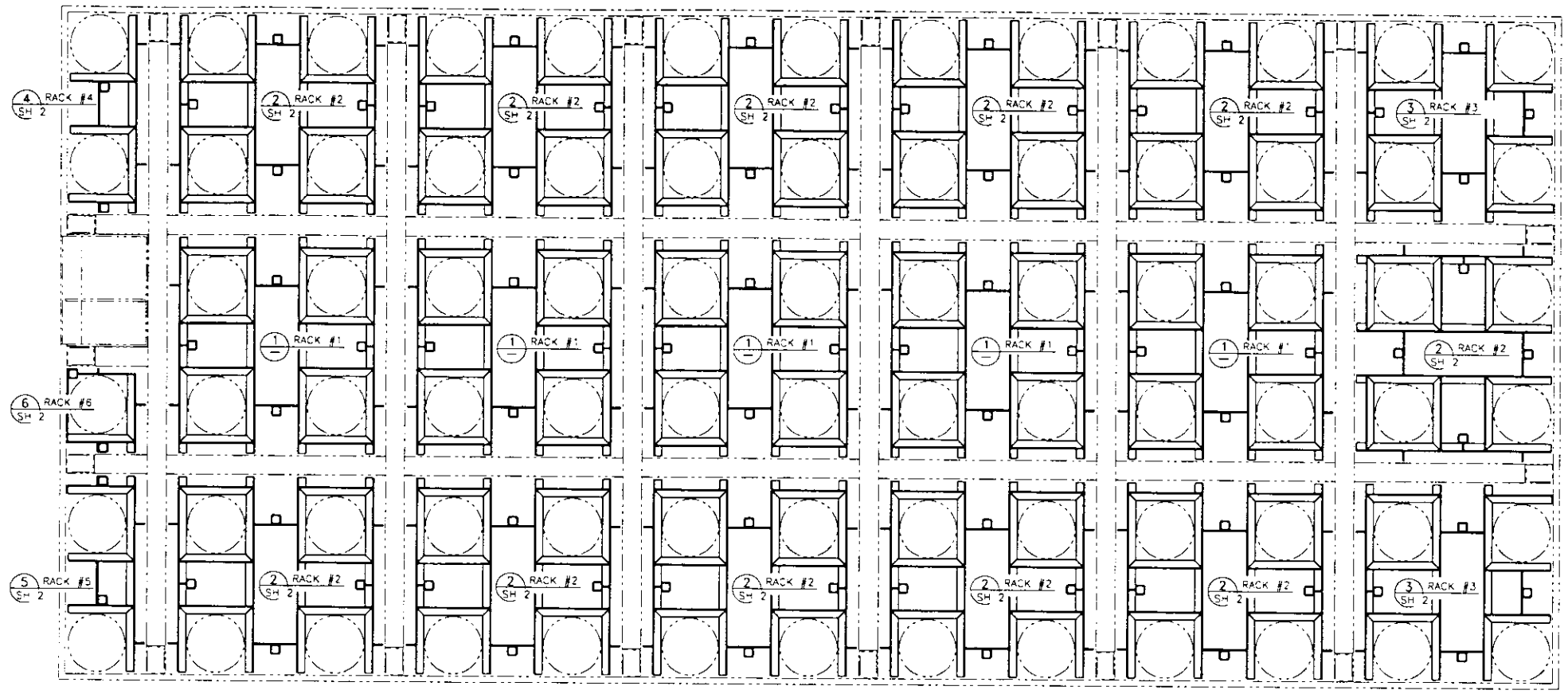

CONTAINER RACK INSTALLATION PLAN
SCALE: 1"=1'-0"
77 CONTAINER POSITIONS

NOTES:

1. CONNECTIONS SHALL BE WELDED, SIZE AND TYPE TO BE DETERMINED DURING DEFINITIVE DESIGN

CONCEPTUAL DESIGN

FLUOR FEDERAL SERVICES

PROJECT: T-PLANT SLUDGE HANDLING SYSTEM

U.S. DEPARTMENT OF ENERGY
Richland Operations Office

STRUCTURAL
WET CELL CONTAINER
RACK INSTALLATION PLAN

ES-SHS-S6 0

DWG NO	TITLE
DRAWING TRACEABILITY LIST	

REF NUMBER	TITLE
ES-SHS-G1	DRAWING LIST & KEY MAP
REFERENCES	
NEXT USED ON END ITEM	

REVISIONS

BLDG. NO.
INDEX NO.
THIS SPACE RESERVED FOR BUILDING AND INDEX NUMBERS

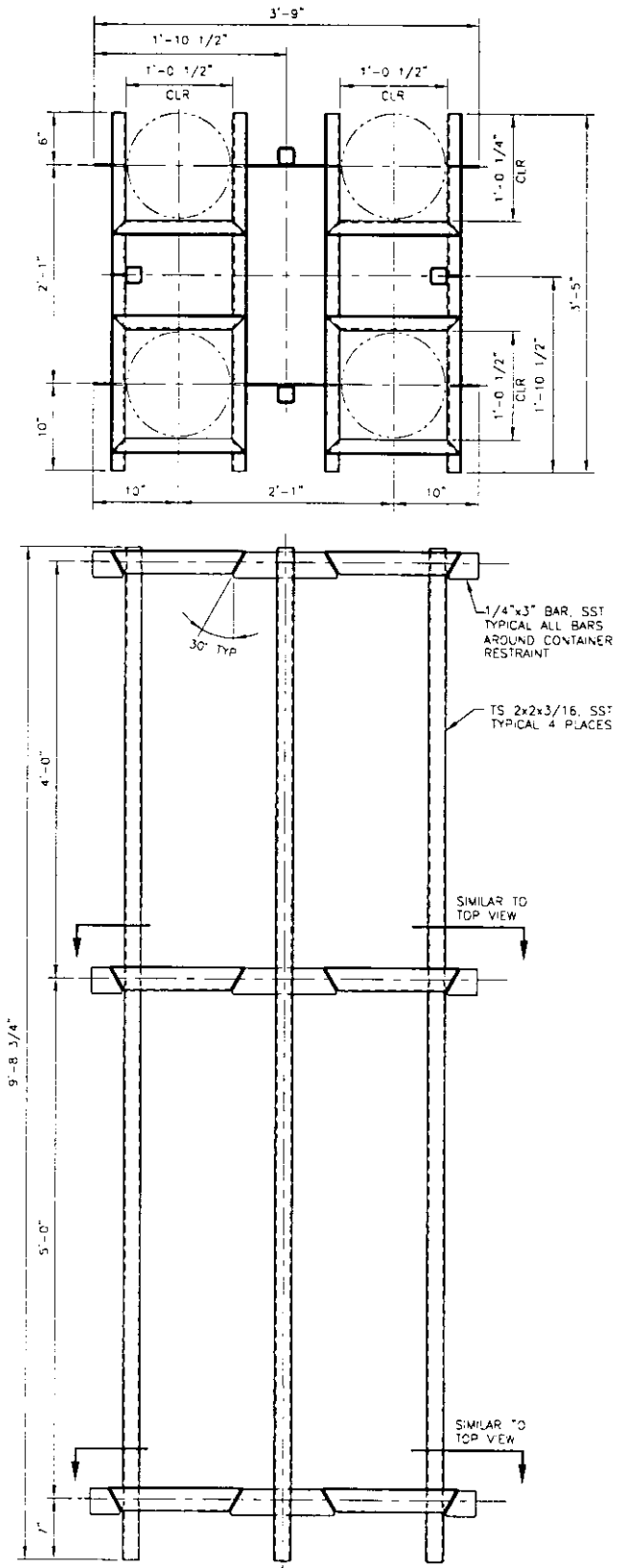

2 SH 1 CONTAINER RACK #2
SCALE 1/8
WEIGHT: 220 LBS
TYP 11 PLACES

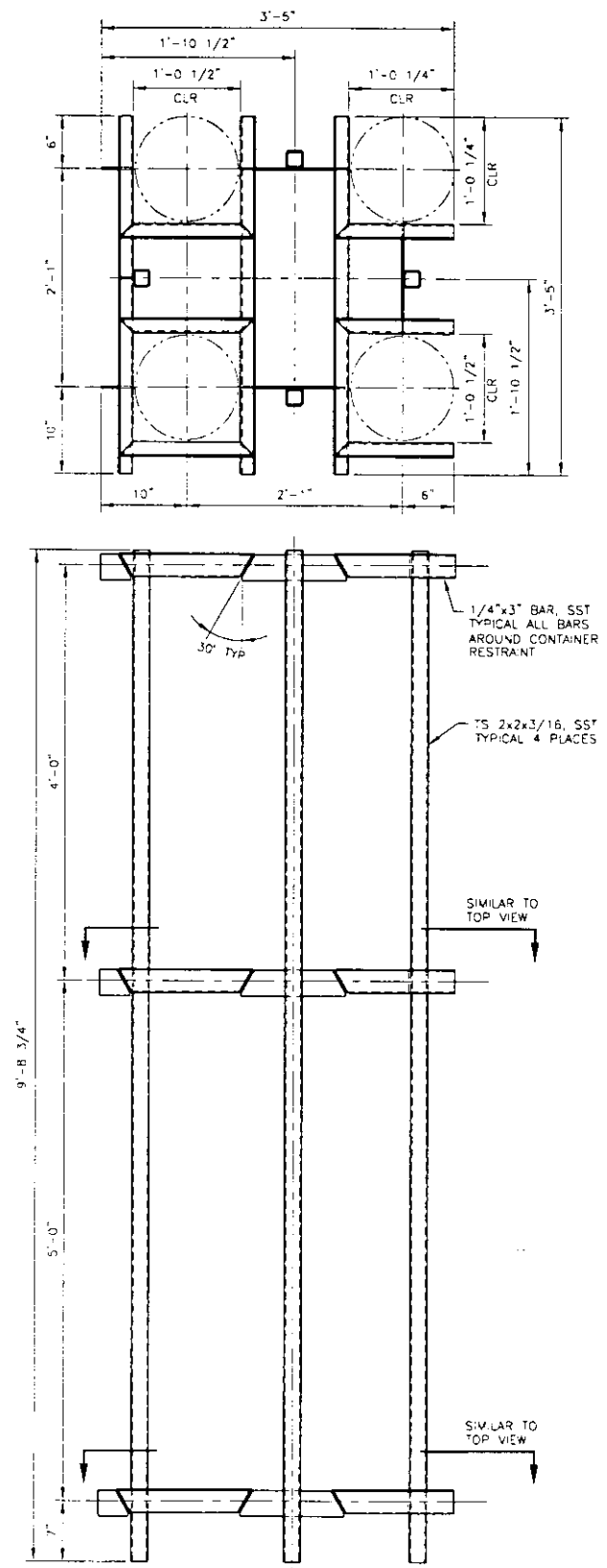

3 SH 1 CONTAINER RACK #3
SCALE 1/8
WEIGHT: 210 LBS
TYP 2 PLACES

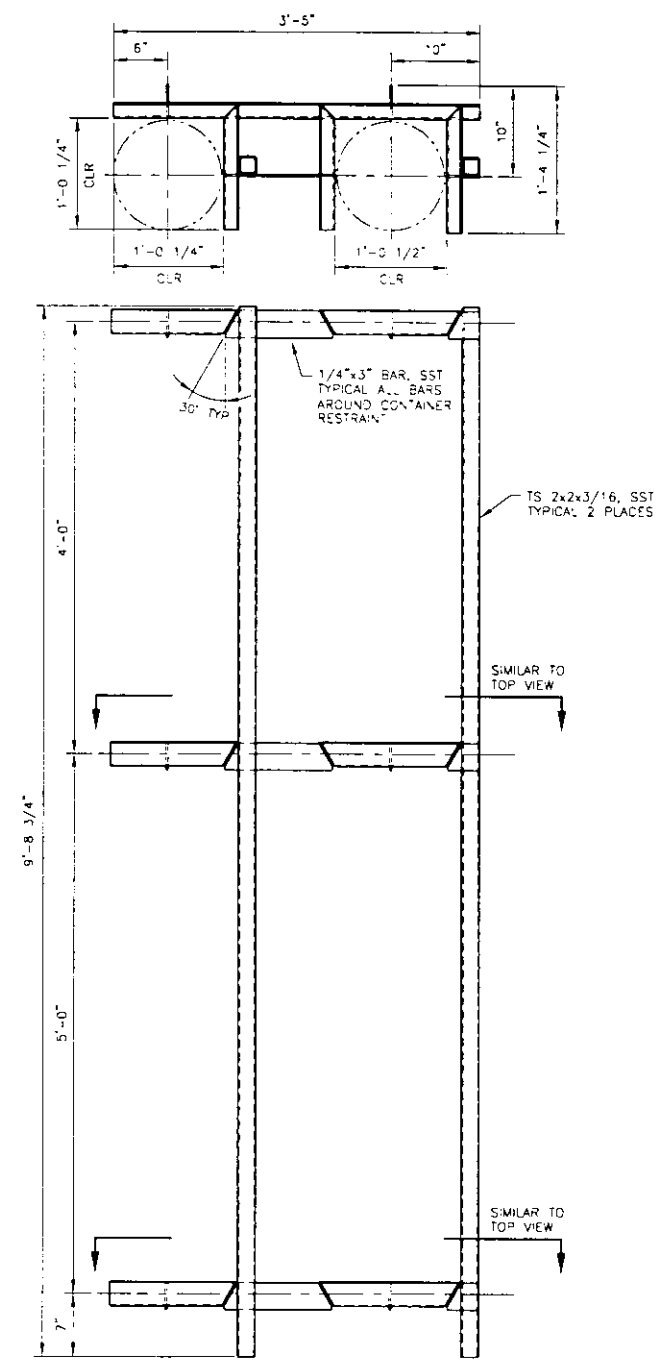

4 SH 1 CONTAINER RACK #4
SCALE 1/8
WEIGHT: 115 LBS
TYP 1 PLACE

5 SH 1 CONTAINER RACK #5
SCALE 1/8
OPPOSITE HAND (MIRROR IMAGE)
WEIGHT: 115 LBS
TYP 1 PLACE

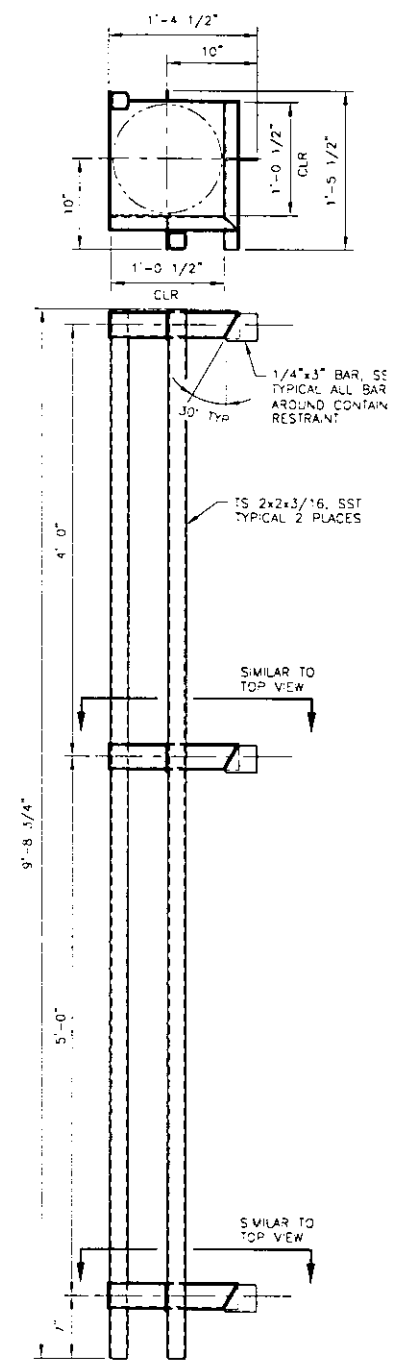

6 SH 1 CONTAINER RACK #6
SCALE 1/8
WEIGHT: 110 LBS
TYP 1 PLACE

FOR NOTES SEE SHEET 1

CONCEPTUAL DESIGN

FLUOR FEDERAL SERVICES

PROJECT: T-PLANT SLUDGE HANDLING SYSTEM

U.S. DEPARTMENT OF ENERGY
Richland Operations Office

STRUCTURAL
WET CELL CONTAINER
RACK ASSEMBLIES

SIZE F | DWG NO ES-SHS-S6 | REV 0

DWG NO	TITLE
DRAWING TRACEABILITY LIST	

REF NUMBER	TITLE
ES-SHS-G1	DRAWING LIST & KEY MAP

REFERENCES
NEXT USED ON END ITEM

REVISIONS

J-25 1

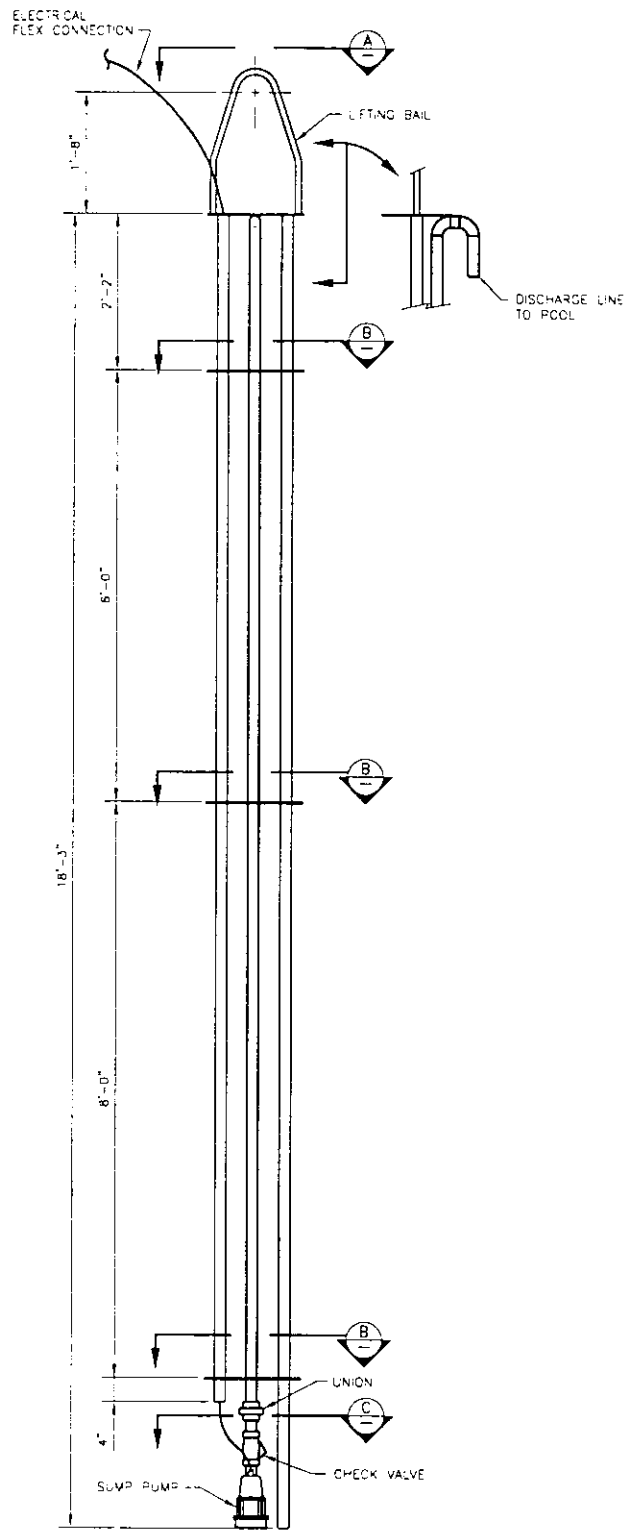

SUMP PUMP SUPPORT
SCALE: 1"=1'-0"

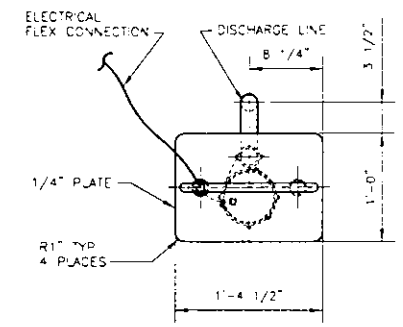

A SECTION
SCALE: 1 1/2"=1'-0"

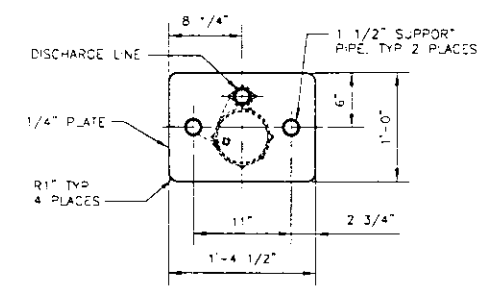

B SECTION
SCALE: 1 1/2"=1'-0"

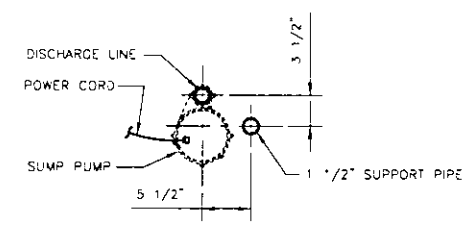

C SECTION
SCALE: 1 1/2"=1'-0"

NOTES:

1. CONNECTIONS SHALL BE WELDED, SIZE AND TYPE TO BE DETERMINED DURING DEFINITIVE DESIGN.
2. ALL CARBON STEEL SURFACES SHALL BE COATED WITH A SPECIAL PROTECTIVE COATING.

CONCEPTUAL DESIGN

THIS SPACE RESERVED FOR BUILDING AND INDEX NUMBERS

BLDG. NO.

INDEX NO.

DWG NO ES-SHS-S7 SH 1 OF 1 REV 0

FLUOR FEDERAL SERVICES

PROJECT: T-PLANT, SLUDGE HANDLING SYSTEM

NAME	DATE	COMPANY
DESIGN BY: RS CHRISTENSEN		

U.S. DEPARTMENT OF ENERGY
Richland Operations Office

STRUCTURAL
WET CELL
SUMP PUMP SUPPORT

SIZE F | BLDG NO 22-1-1 | INDEX NO 1 | DWG NO ES-SHS-S7 | REV 0

SCALE | TEMP | SHEET 1 OF 1

DESIGN AUTHORITY

DWG NO	TITLE
ES-SHS-G1	DRAWING LIST & KEY MAP
REF NUMBER	TITLE

DRAWING TRACEABILITY LIST — REFERENCES — NEXT USED ON END ITEM

REVISIONS

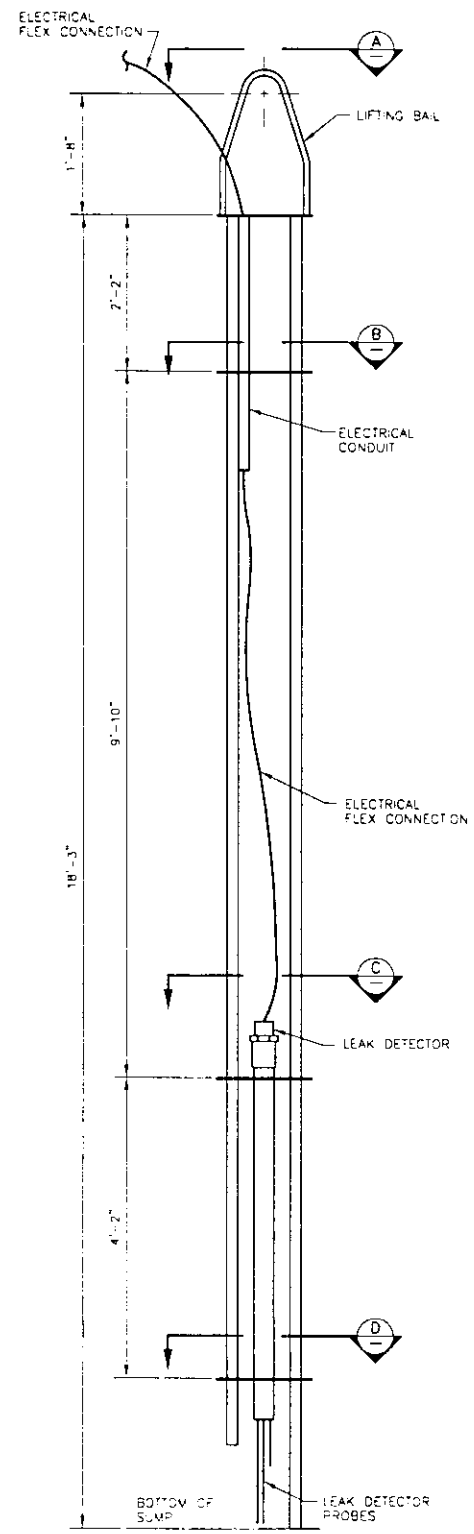

LEAK DETECTOR SUPPORT
SCALE: 1"=1'-0"

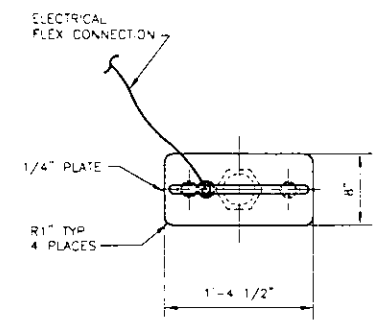

A SECTION
SCALE: 1 1/2"=1'-0"

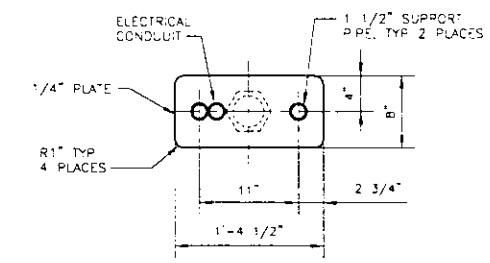

B SECTION
SCALE: 1 1/2"=1'-0"

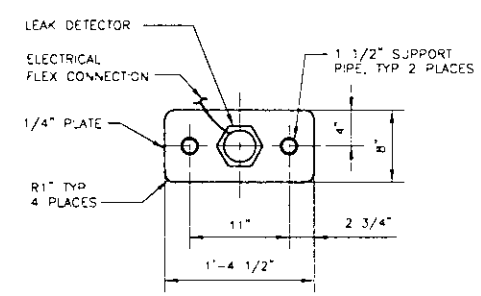

C SECTION
SCALE: 1 1/2"=1'-0"

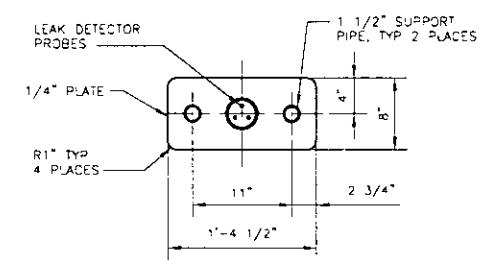

D SECTION
SCALE: 1 1/2"=1'-0"

NOTES:

1. CONNECTIONS SHALL BE WELDED SIZE AND TYPE TO BE DETERMINED DURING DEFINITIVE DESIGN
2. ALL CARBON STEEL SURFACES SHALL BE COATED WITH A SPECIAL PROTECTIVE COATING

CONCEPTUAL DESIGN

FLUOR FEDERAL SERVICES

PROJECT: T-PLANT, SLUDGE HANDLING SYSTEM

NAME	DATE	COMPANY
DRAWN BY RS CHRISTENSEN		

U.S. DEPARTMENT OF ENERGY
Richland Operations Office

STRUCTURAL
WET CELL
LEAK DETECTOR SUPPORT

SIZE F | BLDG NO 221-T | INDEX NO | DWG NO ES-SHS-S8 | REV 0

SCALE | CDR | SHEET 1 OF 1

THIS SPACE RESERVED FOR BUILDING AND INDEX NUMBERS

BLDG NO | INDEX NO | DWG NO ES-SHS-S8 | SH 1 OF 1 | REV 0

DWG NO	TITLE
DRAWING TRACEABILITY LIST	

REF NUMBER	TITLE
ES-SHS-G1	DRAWING LIST & KEY MAP
REFERENCES	
NEXT USED ON END ITEM	

REVISIONS

J-27 1

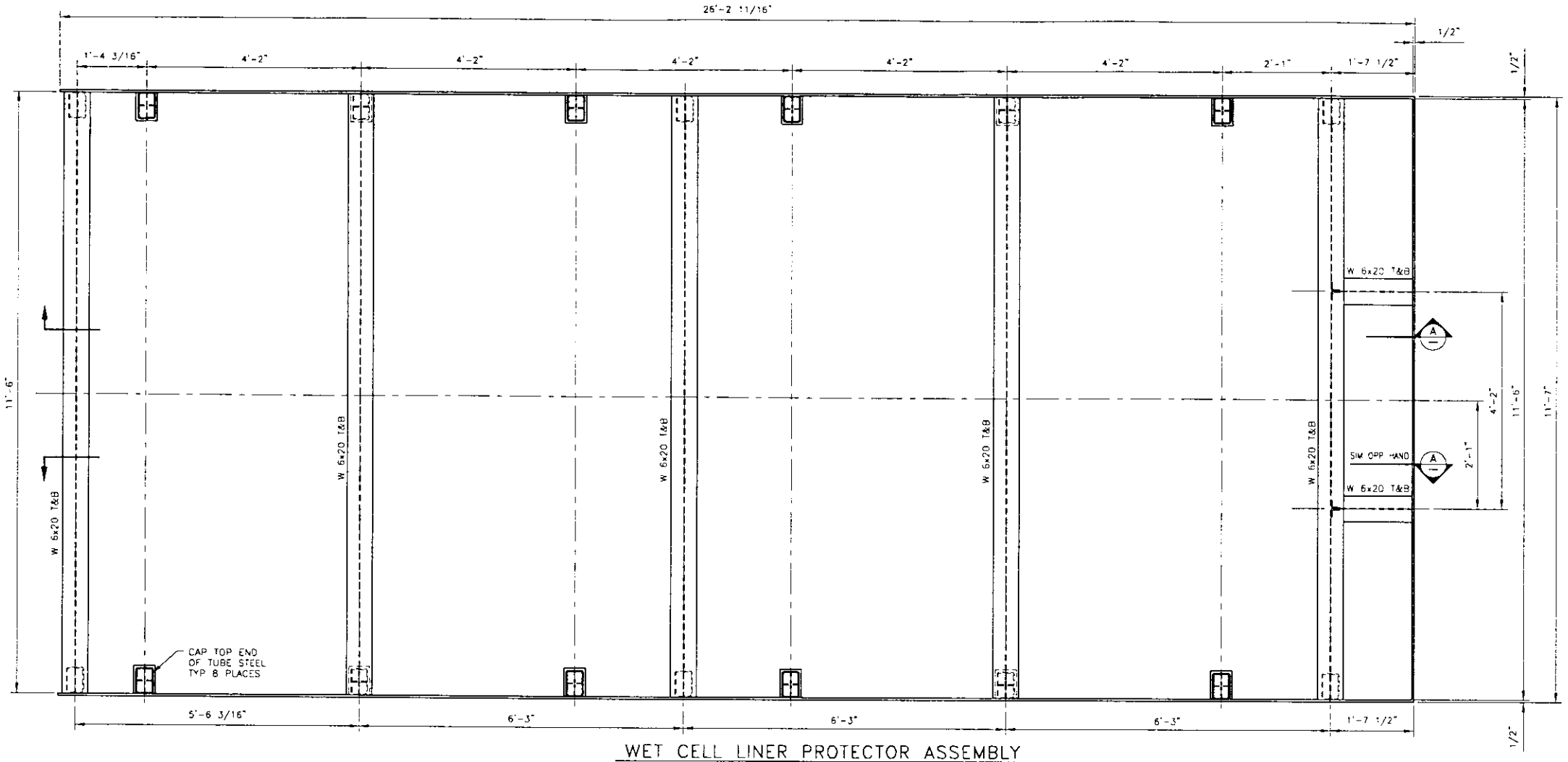

WET CELL LINER PROTECTOR ASSEMBLY

SCALE: 1"=1'-0"

NOTE: ALL MATERIAL IS CS

APPROX WEIGHT: 9,950 LBS

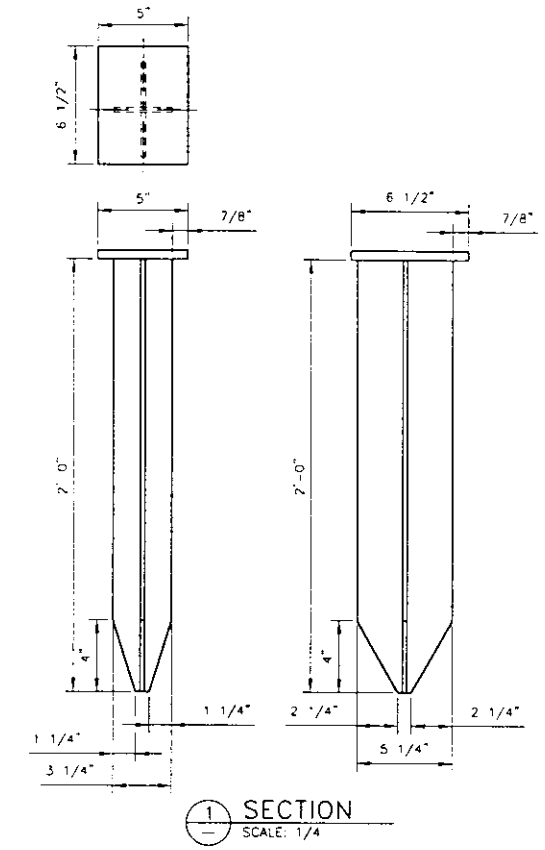

1 SECTION
SCALE: 1/4

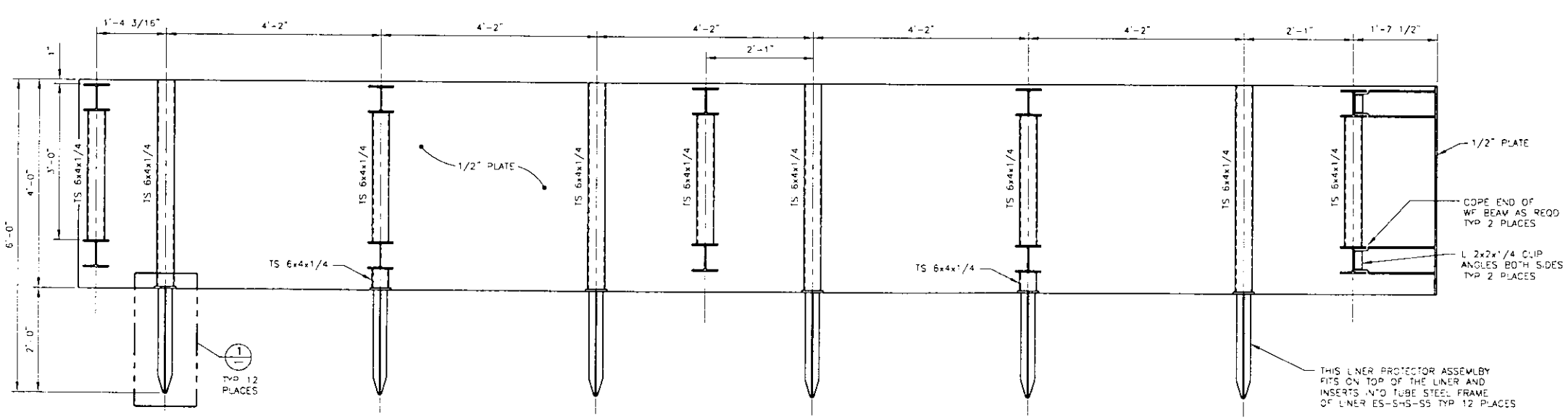

A SECTION
SCALE: 1"=1'-0"

NOTES:

1. CONNECTIONS SHALL BE WELDED. SIZE AND TYPE TO BE DETERMINED DURING DEFINITIVE DESIGN
2. ALL CARBON STEEL SURFACES SHALL BE COATED WITH A SPECIAL PROTECTIVE COATING.

CONCEPTUAL DESIGN

DWG NO	TITLE
ES-SHS-G1	DRAWING LIST & KEY MAP

DRAWING TRACEABILITY LIST — REFERENCES — NEXT USED ON END ITEM

REVISIONS

FLUOR FEDERAL SERVICES

PROJECT: T-PLANT SLUDGE HANDLING SYSTEM

U.S. DEPARTMENT OF ENERGY
Richland Operations Office

STRUCTURAL
WET CELL LINER
PROTECTOR ASSEMBLY

SIZE F | BLDG NO 221-T | DWG NO ES-SHS-S9 | REV 0

BLDG NO | INDEX NO | DWG NO ES-SHS-S9

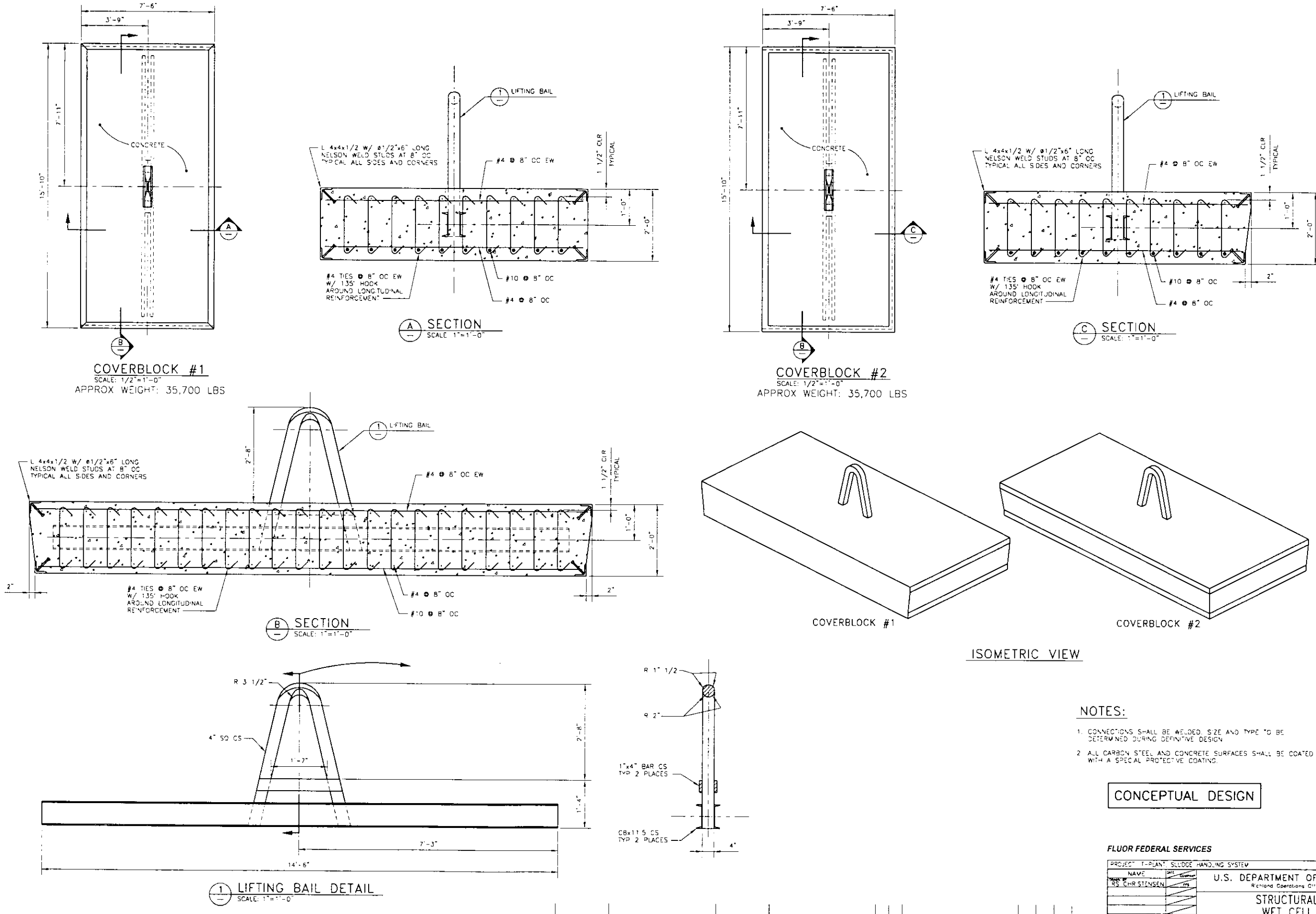

NOTES:

1. CONNECTIONS SHALL BE WELDED. SIZE AND TYPE TO BE DETERMINED DURING DEFINITIVE DESIGN.
2. ALL CARBON STEEL AND CONCRETE SURFACES SHALL BE COATED WITH A SPECIAL PROTECTIVE COATING.

CONCEPTUAL DESIGN

FLUOR FEDERAL SERVICES

PROJECT: T-PLANT SLUDGE HANDLING SYSTEM

NAME: RS CHRISTENSEN

U.S. DEPARTMENT OF ENERGY
Richland Operations Office

STRUCTURAL
WET CELL
CONCRETE COVER BLOCKS

SIZE: F | BLDG NO: 221-T | INDEX NO: ES-SHS-S10 | REV: 0

DWG NO	TITLE
ES-SHS-G1	DRAWING LIST & KEY MAP

DRAWING TRACEABILITY LIST

REF NUMBER | TITLE
REFERENCES
NEXT USED ON END ITEM

REVISIONS

BLDG NO. | INDEX NO. | DWG NO ES-SHS-S10 | REV 0

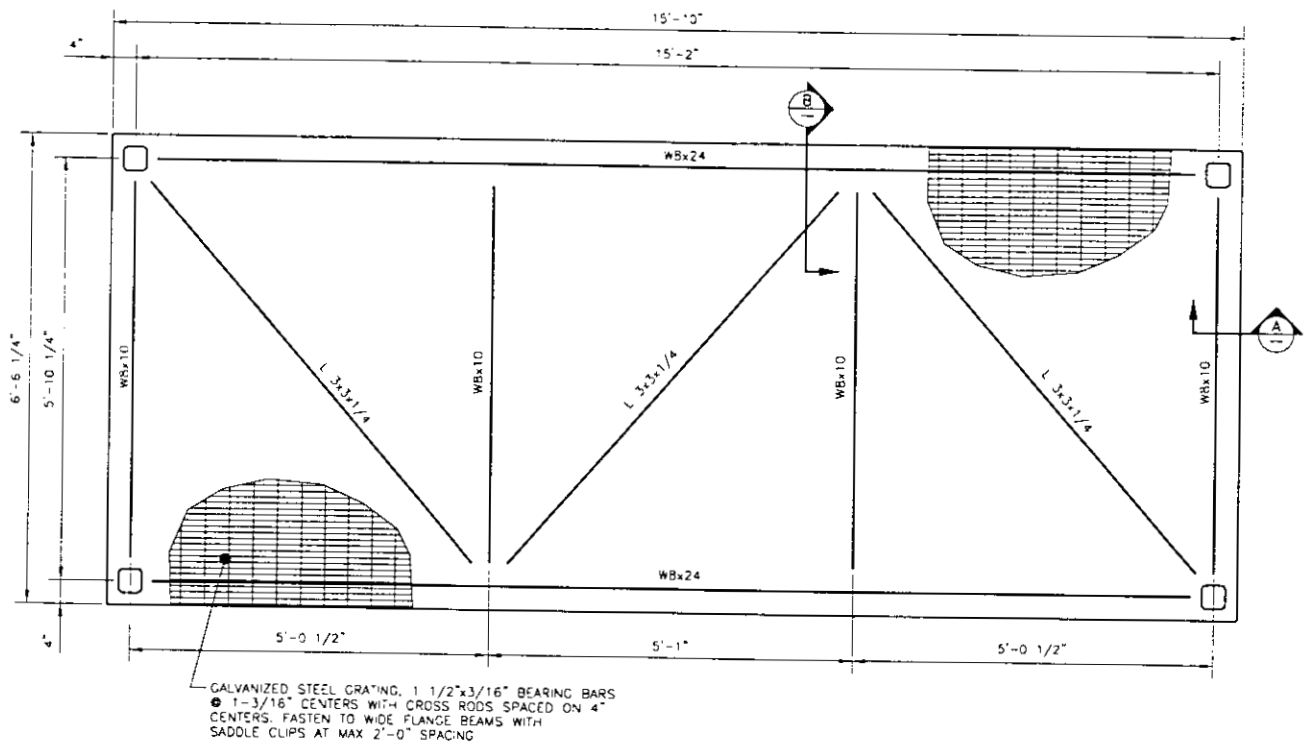

OPEN GRATING COVER BLOCK
SCALE: 1"=1'-0"
APPROX WEIGHT: 2,400 LBS

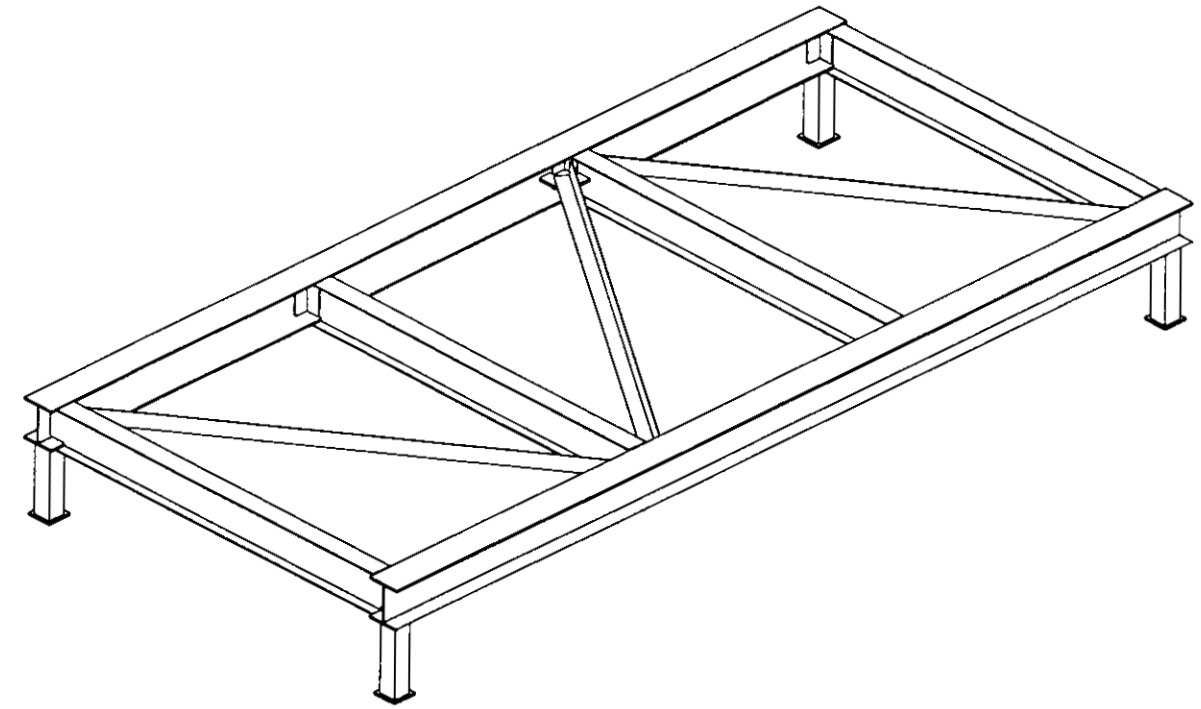

ISOMETRIC VIEW
NOTE: GRATING NOT SHOWN FOR CLARITY

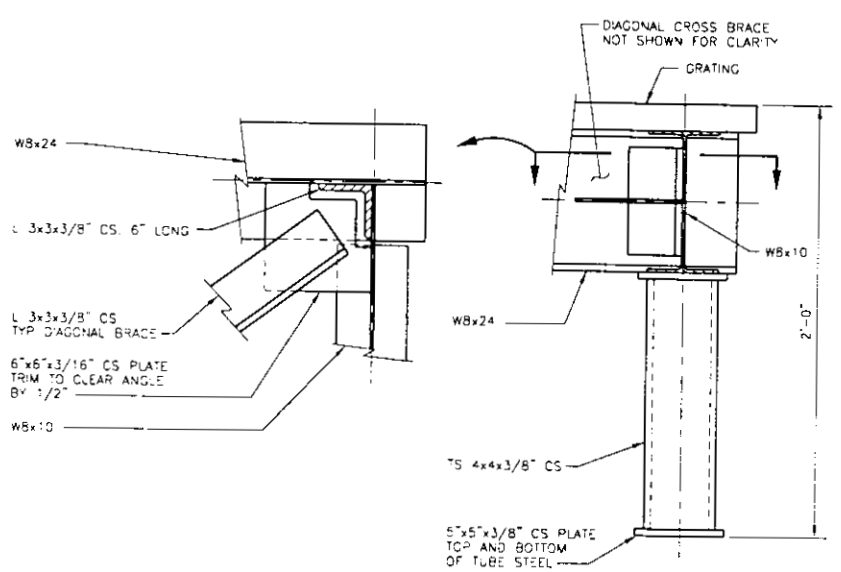

A SECTION
SCALE: 3"=1'-0"

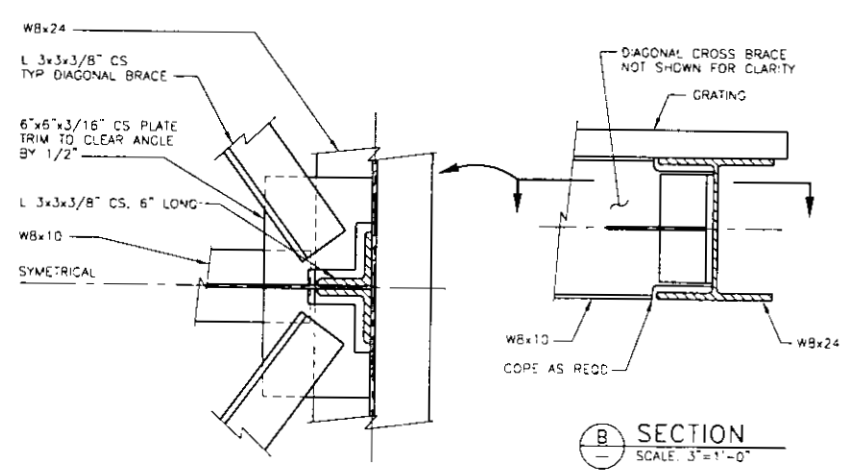

B SECTION
SCALE: 3"=1'-0"

NOTES:

1. CONNECTIONS SHALL BE WELDED SIZE AND TYPE TO BE DETERMINED DURING DEFINITIVE DESIGN
2. ALL CARBON STEEL SURFACES SHALL BE COATED WITH A SPECIAL PROTECTIVE COATING.

CONCEPTUAL DESIGN

FLUOR FEDERAL SERVICES

PROJECT: T-PLANT, SLUDGE HANDLING SYSTEM

NAME	DATE	COMPANY
DRAWN BY: RS CHRISTENSEN		

U.S. DEPARTMENT OF ENERGY
Richland Operations Office

STRUCTURAL
WET POOL
OPEN GRATING COVER BLOCK

SIZE F | BLDG NO 221-T | INDEX NO | DWG NO ES-SHS-S11 | REV 0

SCALE | SHEET 1 OF 1

BLDG NO. | INDEX NO. | DWG NO ES-SHS-S11 | REV 0

THIS SPACE RESERVED FOR BUILDING AND INDEX NUMBERS

DWG NO	TITLE
DRAWING TRACEABILITY LIST	

REF NUMBER	TITLE
ES-SHS-G1	DRAWING LIST & KEY MAP

REFERENCES
NEXT USED ON END ITEM

REVISIONS

J-30 1

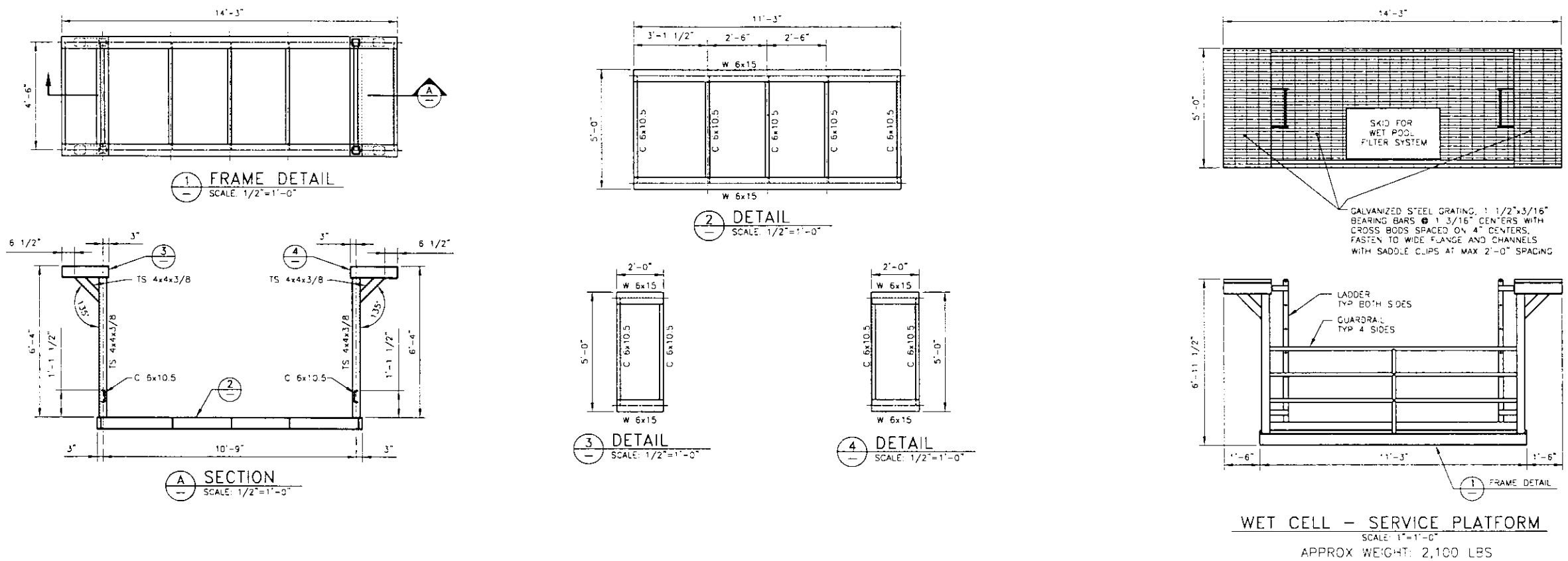

NOTES:

1. CONNECTIONS SHALL BE WELDED. SIZE AND TYPE TO BE DETERMINED DURING DEFINITIVE DESIGN.
2. ALL CARBON STEEL SURFACES SHALL BE COATED WITH A SPECIAL PROTECTIVE COATING.

CONCEPTUAL DESIGN

FLUOR FEDERAL SERVICES

PROJECT: T-PLANT, SLUDGE HANDLING SYSTEM

U.S. DEPARTMENT OF ENERGY
Richland Operations Office

STRUCTURAL
WET CELL
LOWER SERVICE PLATFORM

SIZE F | BLDG NO 221-T | DWG NO ES-SHS-S12 | REV 0

DWG NO	TITLE
DRAWING TRACEABILITY LIST	

REF NUMBER	TITLE
ES-SHS-G1	DRAWING LIST & KEY MAP
REFERENCES	
NEXT USED ON END ITEM	

REVISIONS

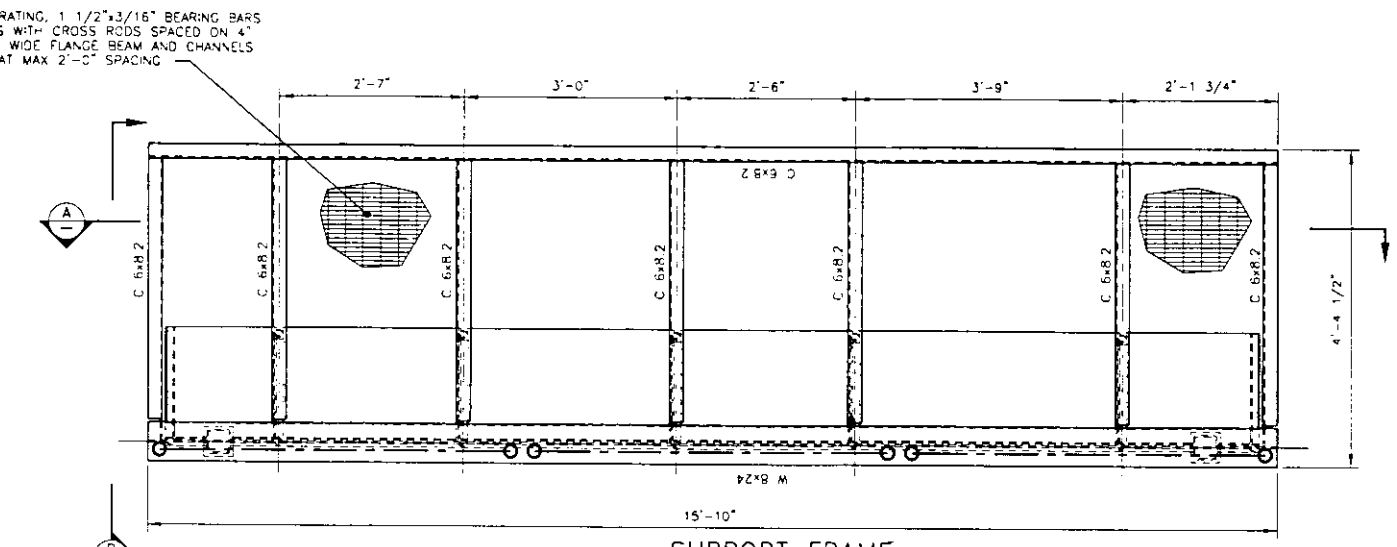

SUPPORT FRAME
SCALE: 1"=1'-0"
APPROX WEIGHT: 1,700 LBS
(APPROX 2,800 LBS FULL ASSEMBLY)

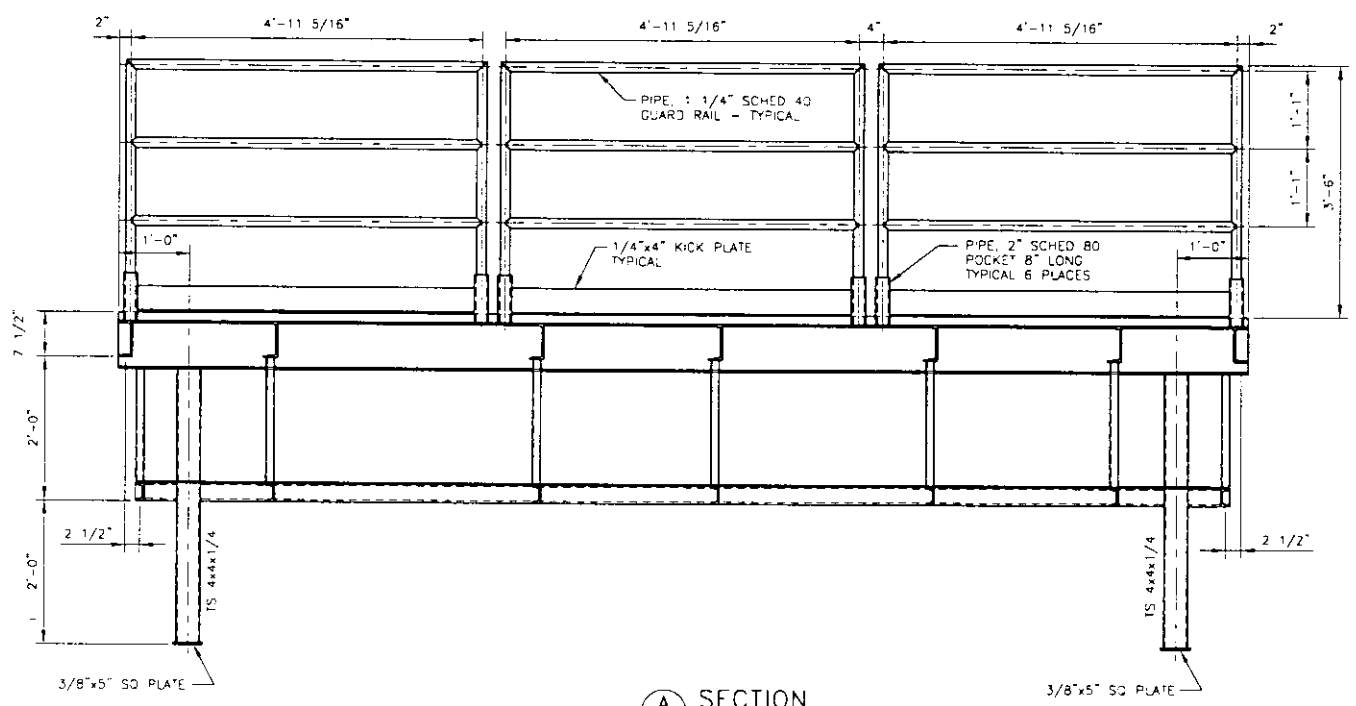

A SECTION
SCALE: 1"=1'-0"

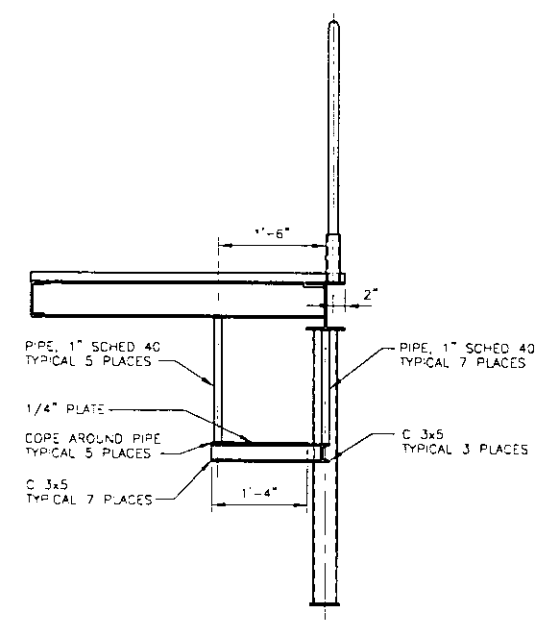

B SECTION
SCALE: 1"=1'-0"

NOTES:

1. MATERIAL FOR CONSTRUCTION:
   MODULAR SUPPORT FRAME
   ALL PLATES AND STEEL SHAPES SHALL BE CARBON STEEL.
   SUPPORT FRAME SHALL BE COATED WITH SPECIAL PROTECTIVE COATING UNLESS NOTED OTHERWISE.
2. LIFTING BRACKETS FOR MODULAR UNIT ARE NOT SHOWN BUT SHALL BE PART OF THE ASSEMBLY. A MINIMUM OF 4 LIFT POINTS SHALL BE PROVIDED PLACED AS REQUIRED TO BALANCE THE FRAME WHEN LIFTED.

NOTES:

1. CONNECTIONS SHALL BE WELDED. SIZE AND TYPE TO BE DETERMINED DURING DEFINITIVE DESIGN.
2. ALL CARBON STEEL SURFACES SHALL BE COATED WITH A SPECIAL PROTECTIVE COATING.

CONCEPTUAL DESIGN

BLDG NO
INDEX NO
THIS SPACE RESERVED FOR BUILDING AND INDEX NUMBERS
REV 0
ES-SHS-S13
DWG NO

FLUOR FEDERAL SERVICES

PROJECT: T-PLANT, SLUDGE HANDLING SYSTEM

NAME	DATE	COMPANY
DRAWN BY RS CHRISTENSEN		

U.S. DEPARTMENT OF ENERGY
Richland Operations Office

STRUCTURAL
WATER TREATMENT SKID
PLAN, SECTIONS & DETAILS

F | B-DE NO 221-T | INDEX NO | DWG NO ES-SHS-S13 | REV 0
SCALE | CDF | SHEET 1 OF 1

DWG NO	TITLE	REFERENCES
		ES-SHS-G1 DRAWING LIST & KEY MAP
DRAWING TRACEABILITY LIST		REF NUMBER / TITLE / NEXT USED ON / END ITEM

REVISIONS: REV NO | DATE | DESCRIPTION | ENGR | COMPANY | DESIGN AUTHORITY

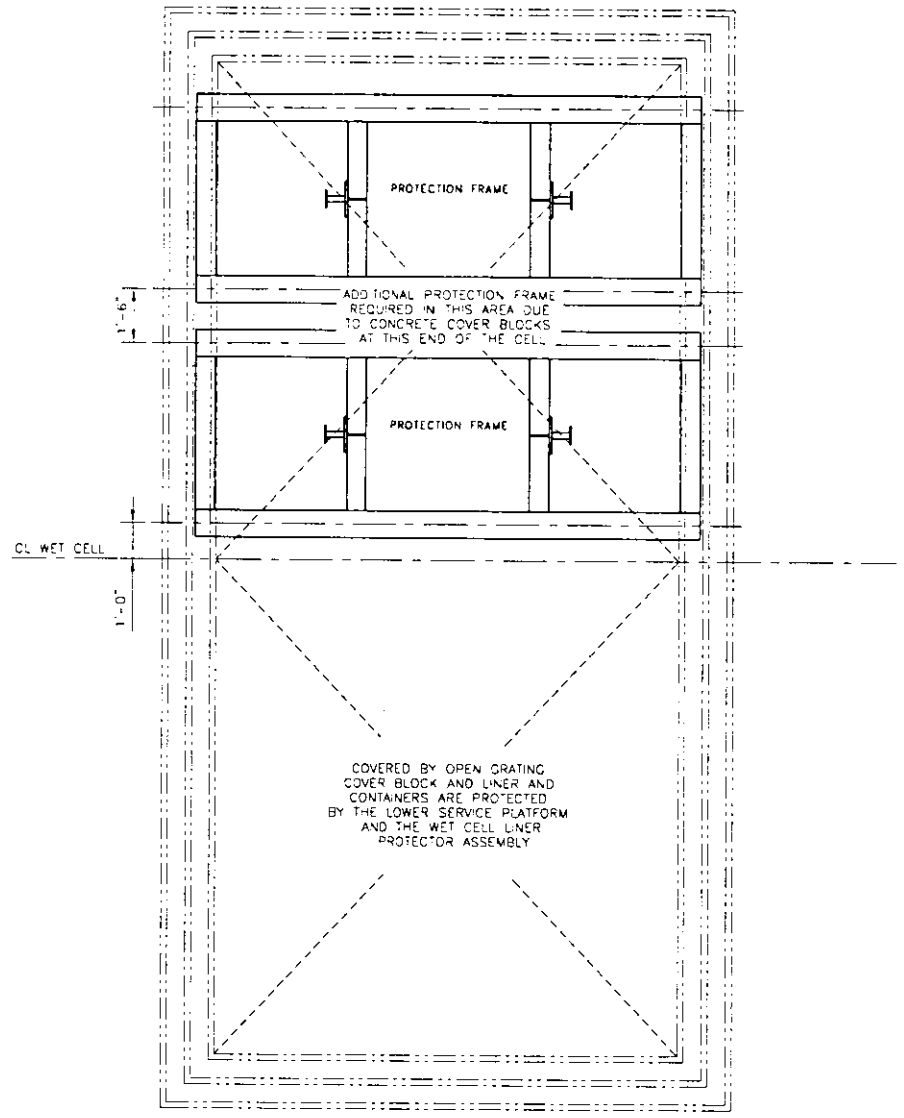

WET CELL – PLAN
SCALE: 1/2"=1'-0"

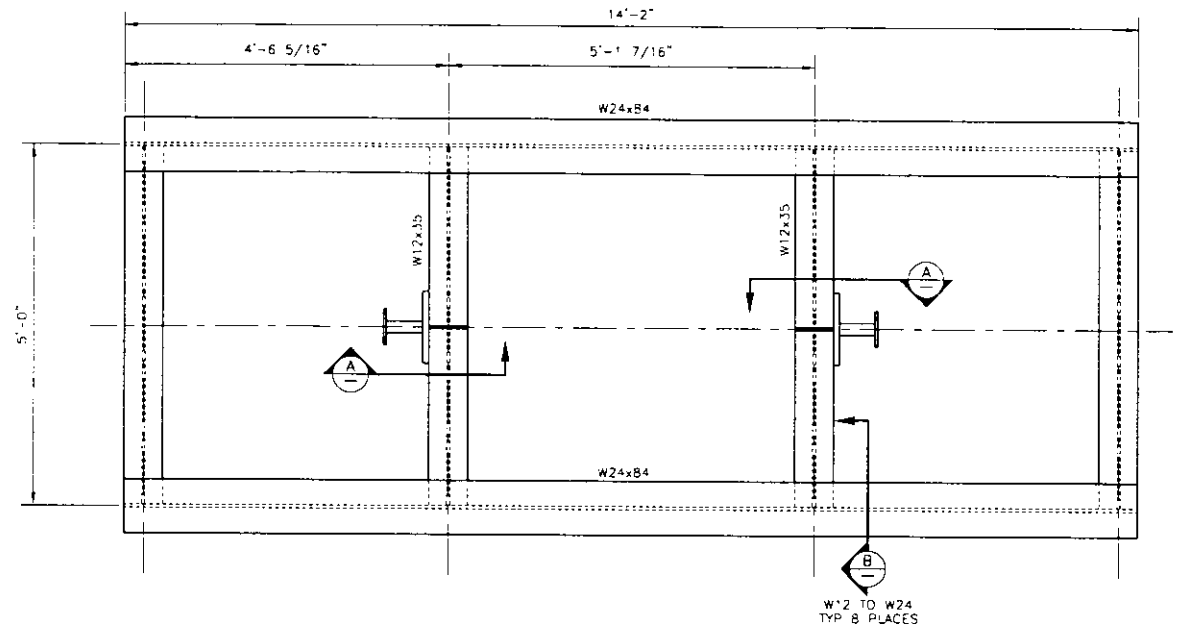

CONTAINER PROTECTION FRAME
SCALE: 1"=1'-0"
APPROX WEIGHT: 3,100 LBS

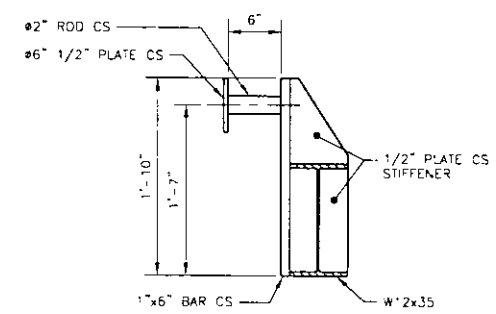

A SECTION
SCALE: 1 1/2"=1'-0"

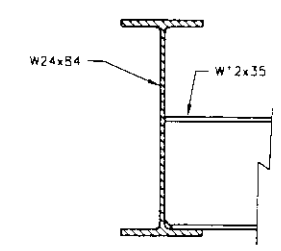

B SECTION
SCALE: 1 1/2"=1'-0"

NOTES:

1. CONNECTIONS SHALL BE WELDED SIZE AND TYPE TO BE DETERMINED DURING DEFINITIVE DESIGN
2. ALL CARBON STEEL SURFACES SHALL BE COATED WITH A SPECIAL PROTECTIVE COATING.

CONCEPTUAL DESIGN

FLUOR FEDERAL SERVICES

PROJECT: T-PLANT, SLUDGE HANDLING SYSTEM

NAME	DATE	COMPANY
DRAWN BY RS CHRISTENSEN		

U.S. DEPARTMENT OF ENERGY
Richland Operations Office

STRUCTURAL
WET CELL
CONTAINER PROTECTION FRAME

SIZE	BLDG NO	INDEX NO	DWG NO	REV
F	221-T		ES-SHS-S14	0

SCALE | EDT | SHEET 1 OF 1

DWG NO	TITLE
DRAWING TRACEABILITY LIST	

REF NUMBER	TITLE
ES-SHS-G1	DRAWING LIST & KEY MAP
REFERENCES	
NEXT USED ON END ITEM	

REVISIONS

BLDG. NO.
INDEX NO.
DWG NO ES-SHS-S14 REV 0

THIS SPACE RESERVED FOR BUILDING AND INDEX NUMBERS

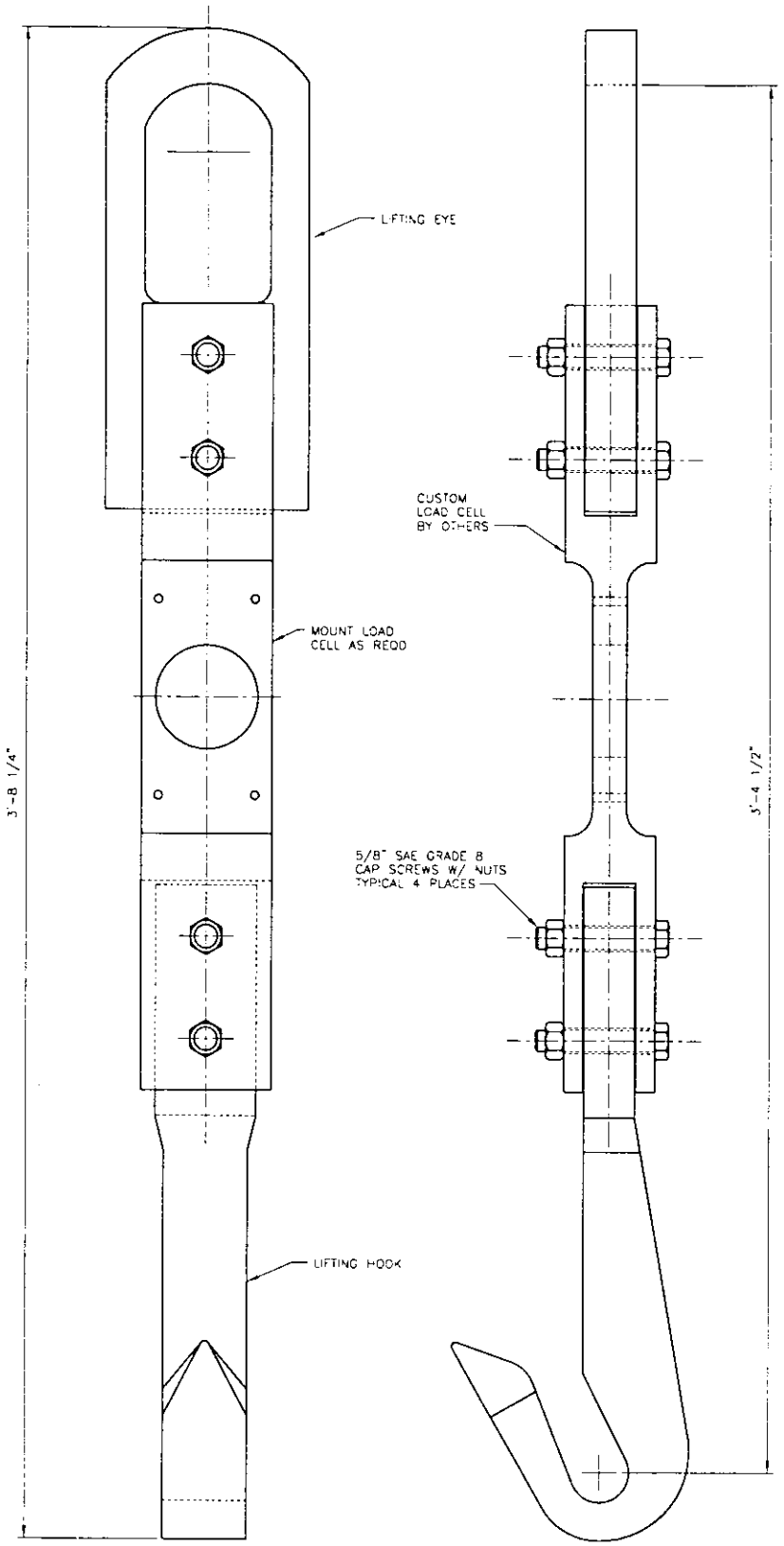

FRONT

SIDE

MAX LIFTING CAPACITY 10,000 LBS

HOOK/LOAD CELL ASSEMBLY
SCALE: 1/4

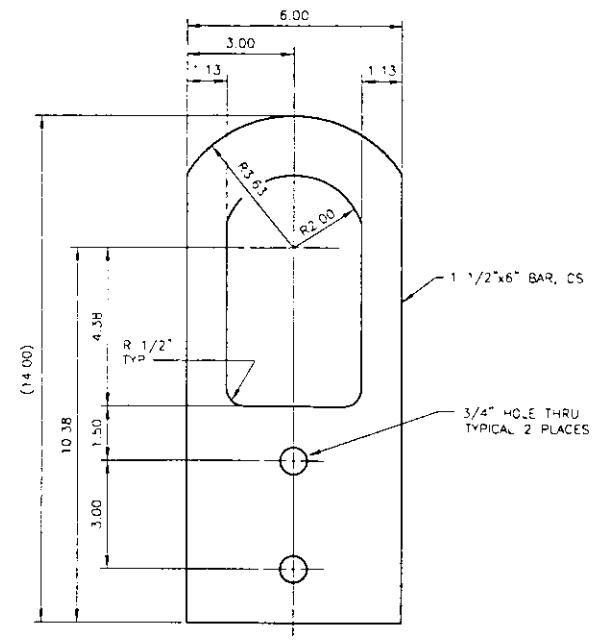

LIFTING EYE
SCALE: 1/2

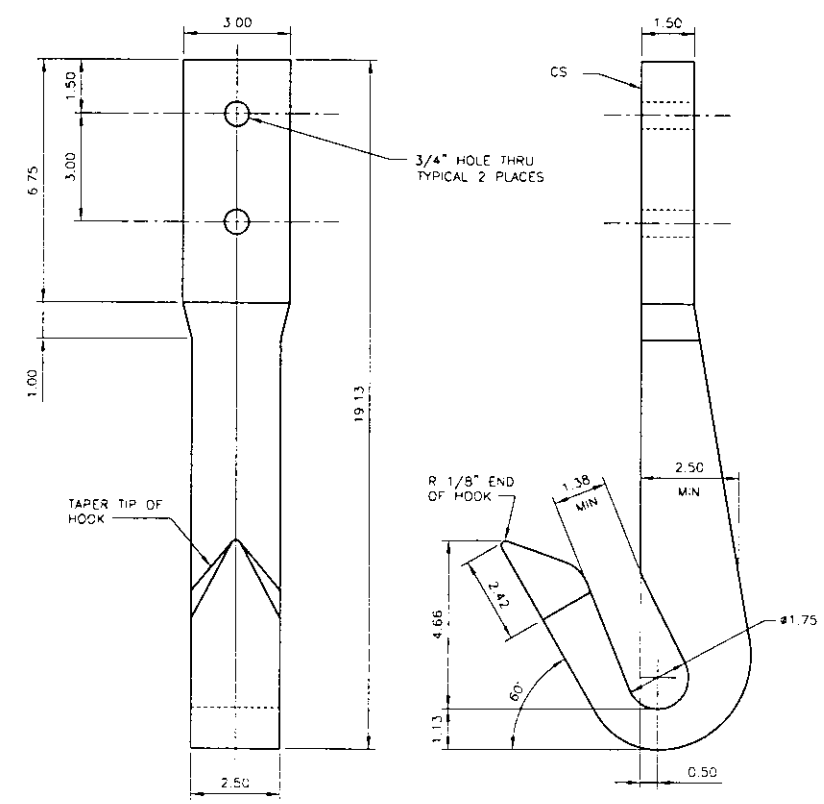

LIFTING HOOK
SCALE: 1/2

CONCEPTUAL DESIGN

FLUOR FEDERAL SERVICES

PROJECT: T-PLANT SLUDGE HANDLING SYSTEM

NAME	DATE	COMPANY
DRAWN BY JS CHRISTENSEN		

U.S. DEPARTMENT OF ENERGY
Richland Operations Office

MECHANICAL
HOOK/LOAD CELL
LIFTING FIXTURE

SIZE	BLDG NO	SHEET NO	DWG NO	REV
F	221-T	2602 2705	ES-SHS-M1	0

SCALE 1/2 CSF SHEET 1 OF 1

BLDG NO.
INDEX NO.
THIS SPACE RESERVED FOR BUILDING AND INDEX NUMBERS

DWG NO	TITLE
ES-SHS-G1	DRAWING LIST & KEY MAP

DRAWING TRACEABILITY LIST

REF NUMBER	TITLE
NEXT USED ON	REFERENCES

REV	DESCRIPTION	ENGR	DESIGN AUTHORITY
0			

REVISIONS

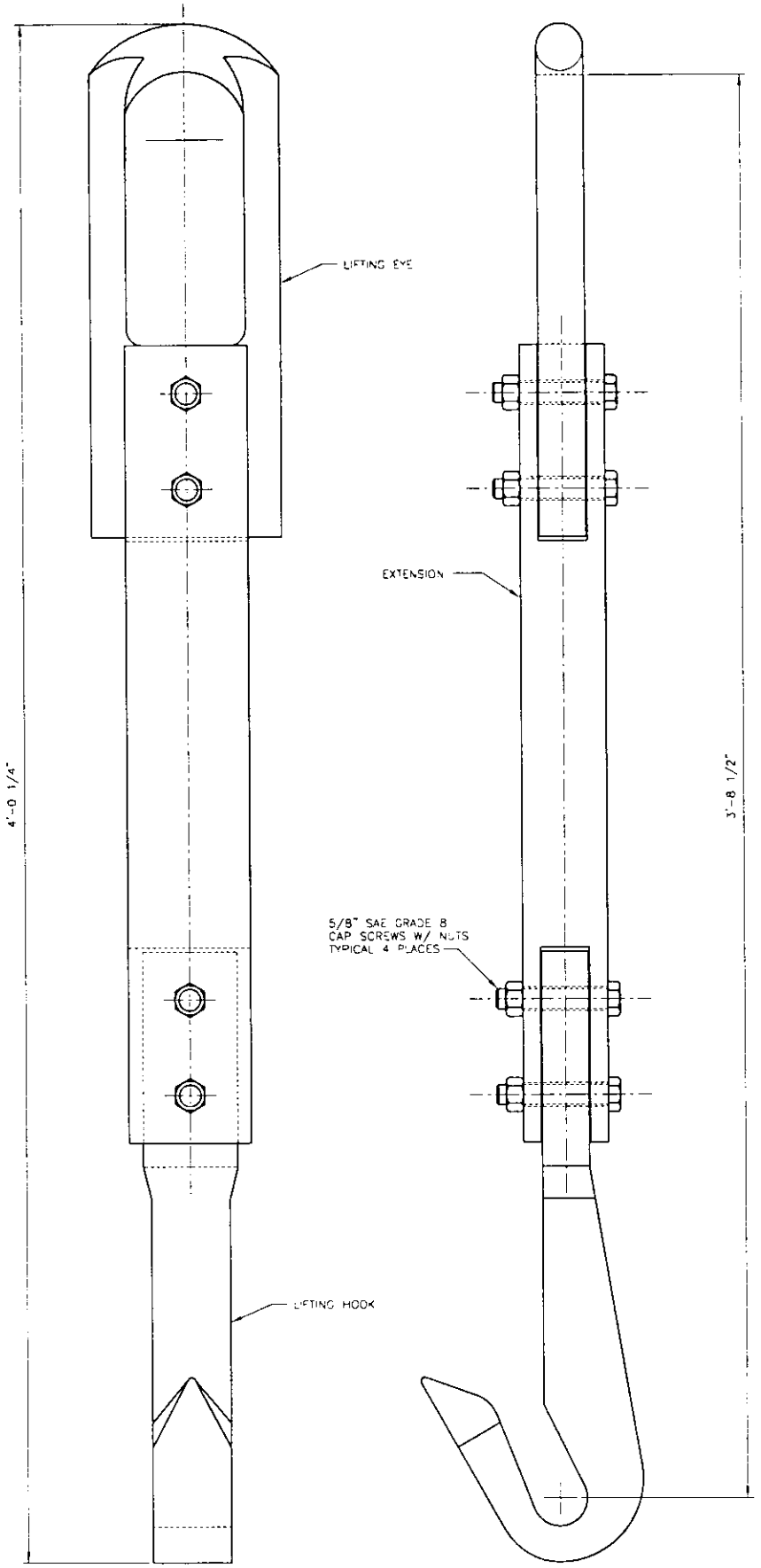

MAX LIFTING CAPACITY 10,000 LBS

HOOK/LOAD CELL ASSEMBLY
SCALE: 1/4

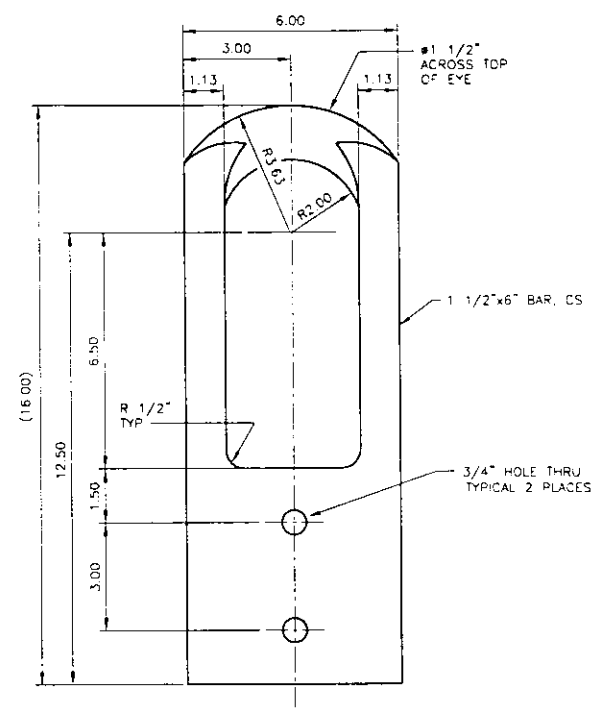

LIFTING EYE
SCALE: 1/2

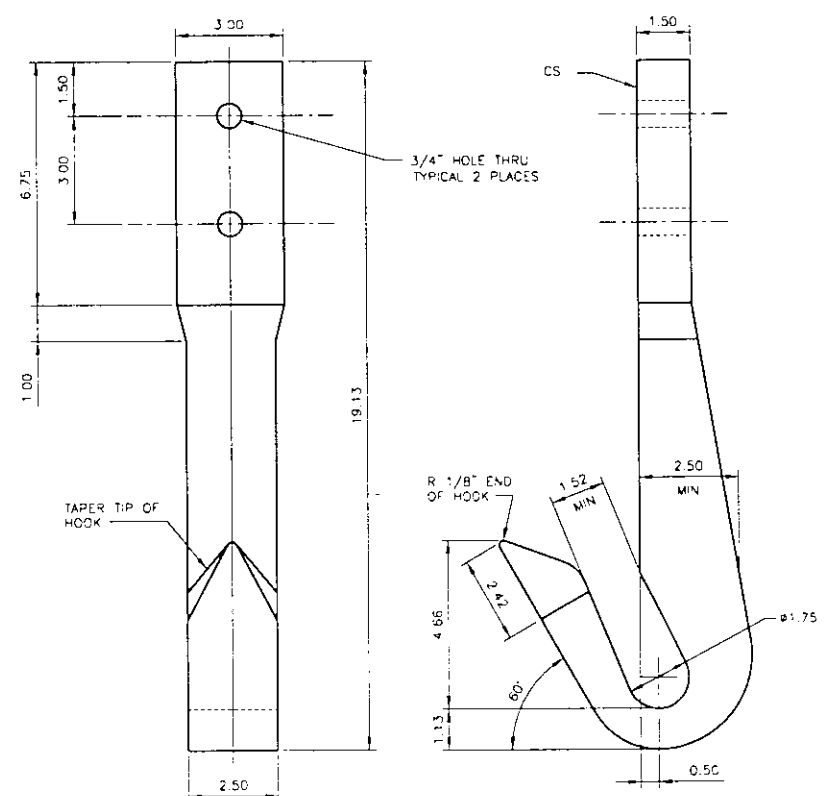

LIFTING HOOK
SCALE: 1/2

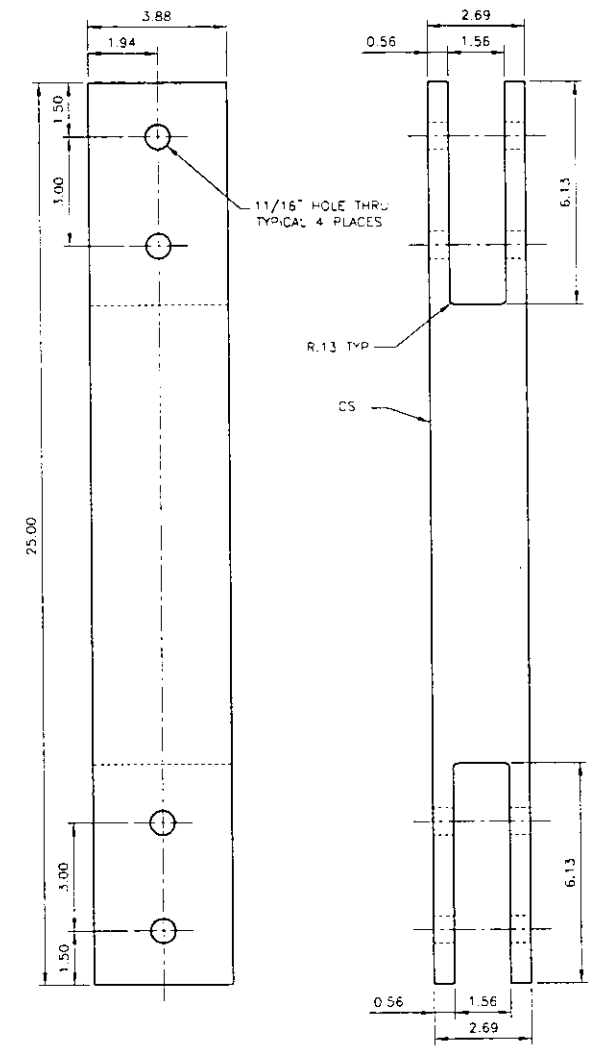

EXTENSION
SCALE 1/2

CONCEPTUAL DESIGN

FLUOR FEDERAL SERVICES

PROJECT: T-PLANT, SLUDGE HANDLING SYSTEM

NAME	DATE	COMPANY
RS CHRISTENSEN		

U.S. DEPARTMENT OF ENERGY
Richland Operations Office

MECHANICAL
EXTENSION HOOK
LIFTING FIXTURE

F | ES-SHS-M2 | 0

SCALE 1/2 | SHEET 1 OF 1

BLDG. NO.

INDEX NO

THIS SPACE RESERVED FOR BUILDING AND INDEX NUMBERS

DWG NO	TITLE
ES-SHS-G1	DRAWING LIST & KEY MAP

DRAWING TRACEABILITY LIST

REF NUMBER	TITLE

REFERENCES

NEXT USED ON

REV NO	REV DATE	DESCRIPTION	CHKD	COMPANY

REVISIONS

DESIGN AUTHORITY

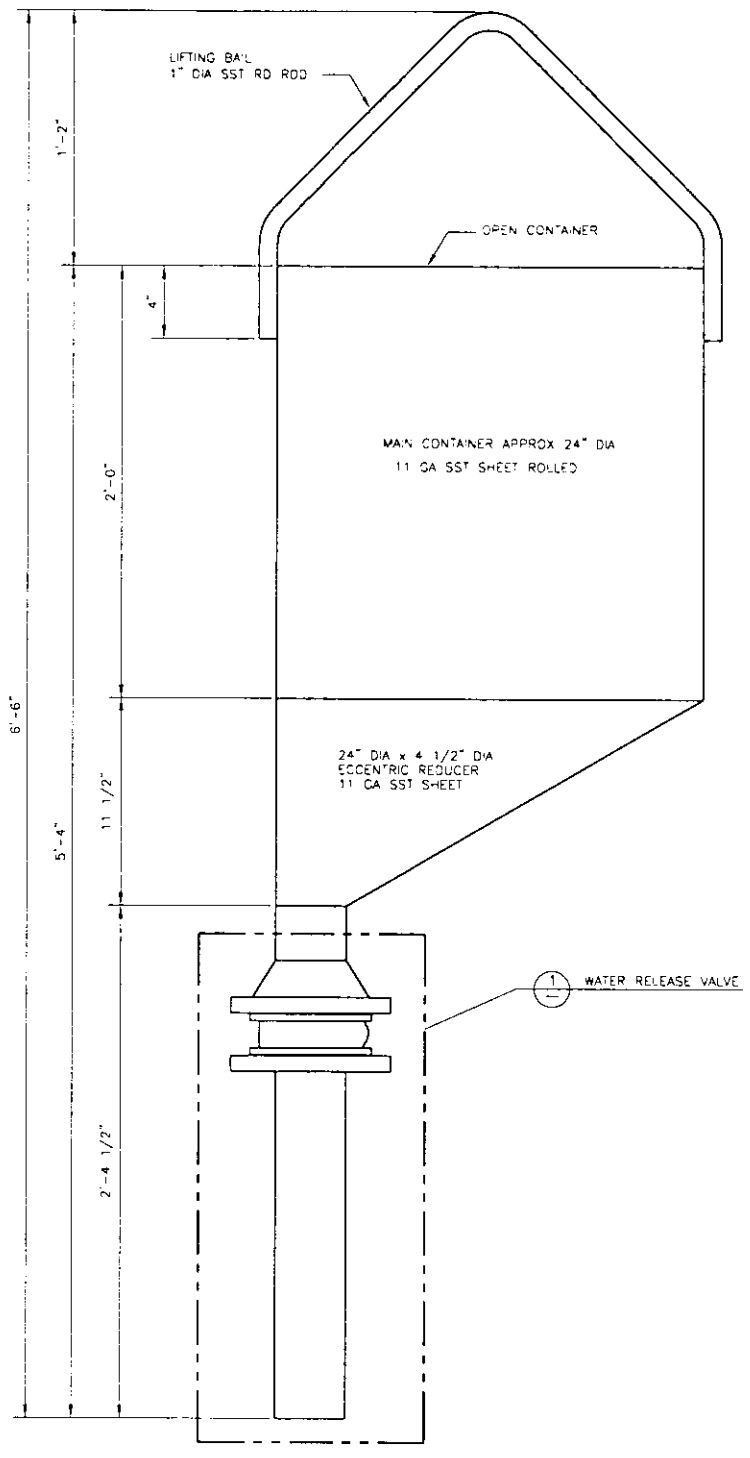

WATER ADDITION CONTAINER
SCALE: 1/4

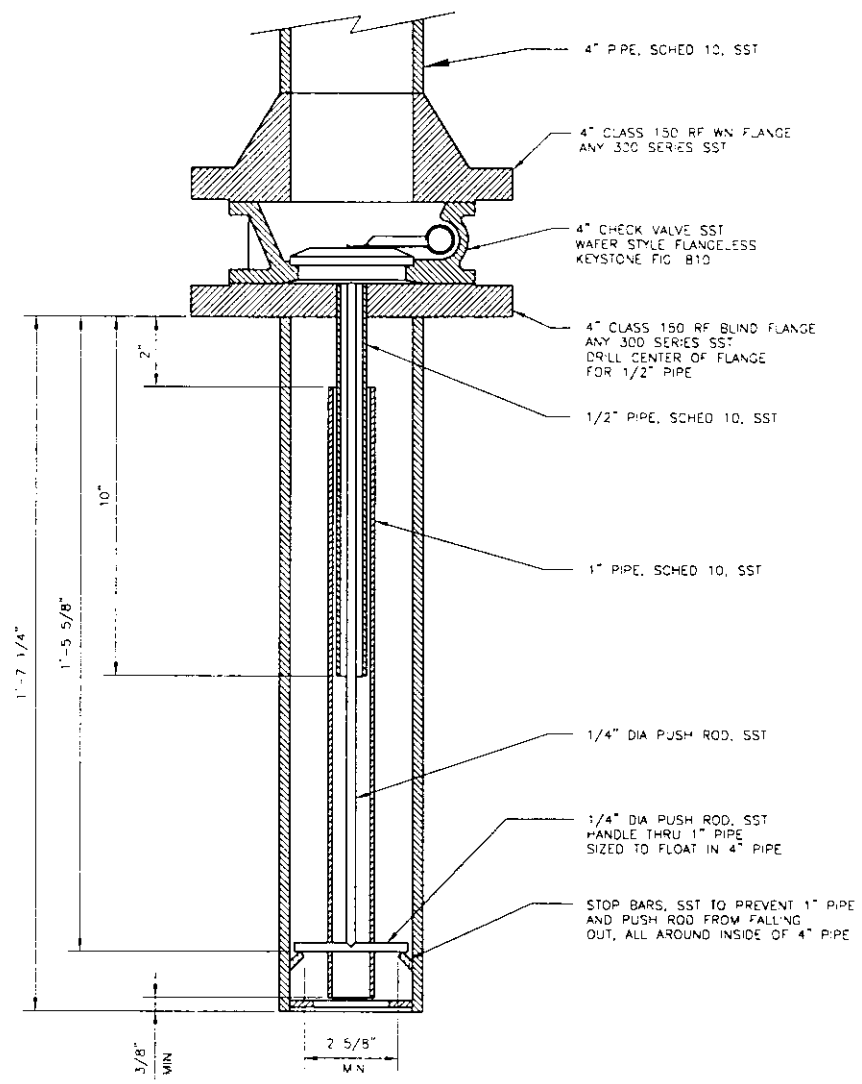

WATER RELEASE VALVE
SCALE: 1/2

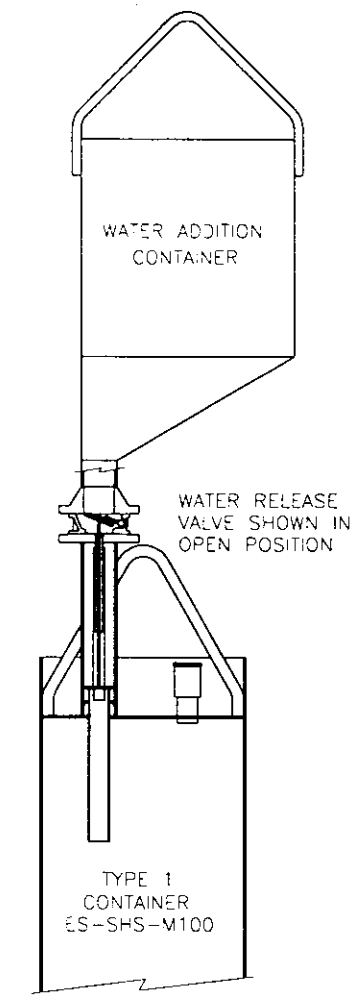

OPERATION OF CONTAINER
SCALE: 1/8

CONCEPTUAL DESIGN

FLUOR FEDERAL SERVICES

PROJECT: T-PLANT SLUDGE HANDLING SYSTEM

U.S. DEPARTMENT OF ENERGY
Richland Operations Office

MECHANICAL
WATER ADDITION
CONTAINER

ES-SHS-M3 | REV 0

DWG NO	TITLE
ES-SHS-G1	DRAWING LIST & KEY MAP

DRAWING TRACEABILITY LIST

REFERENCES

NEXT USED ON

REVISIONS

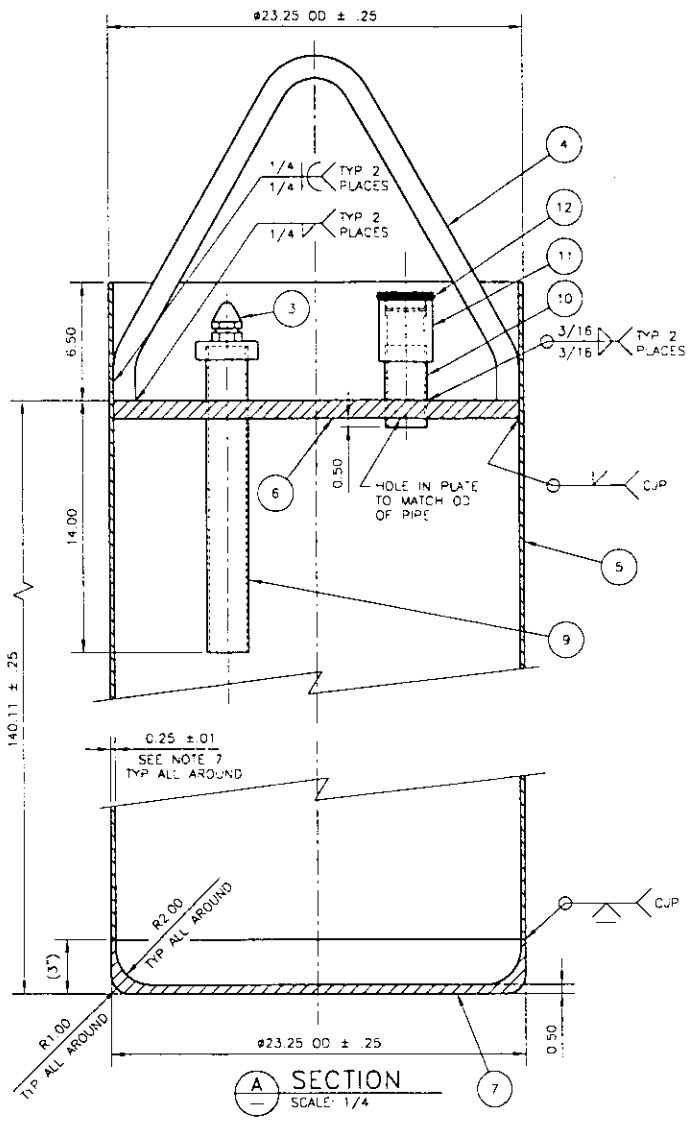

A SECTION
SCALE: 1/4

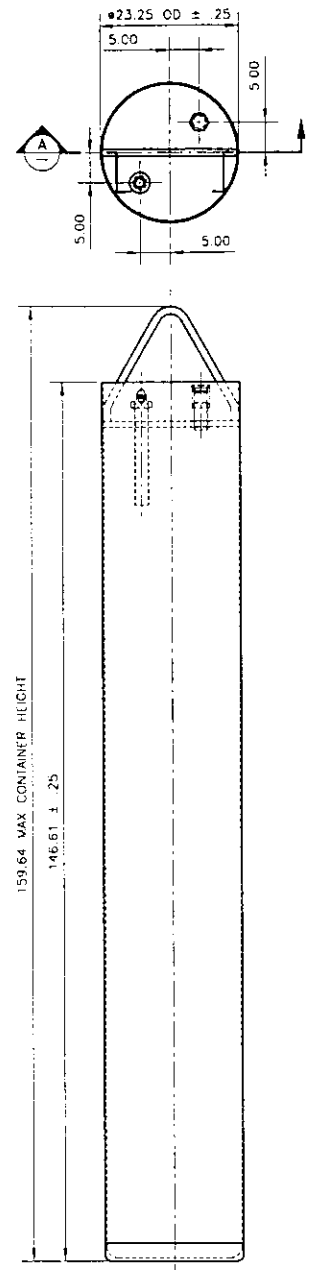

1 TYPE 1 CONTANER ASSEMBLY
SCALE: 1/12

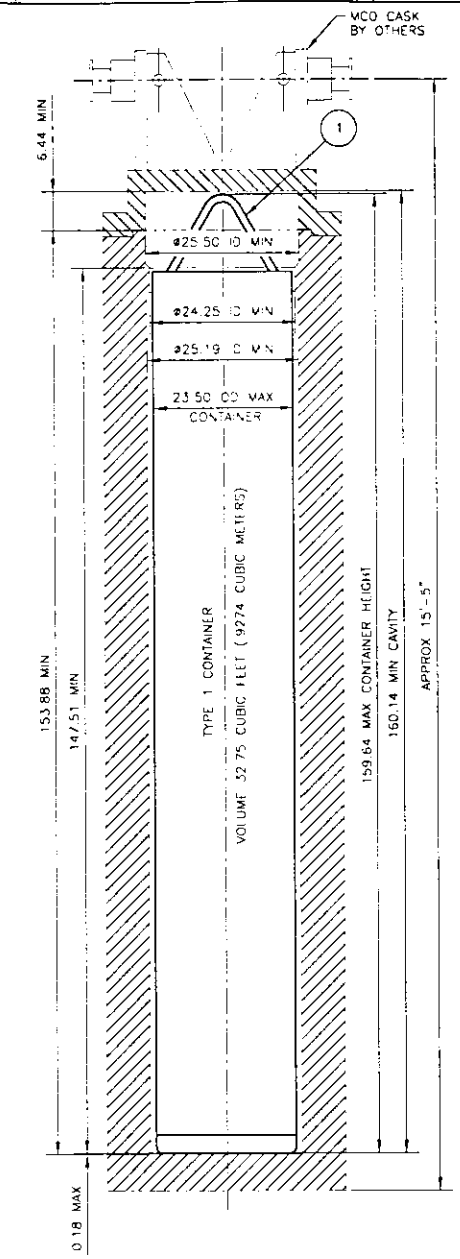

CONTAINER INSTALLATION INTO MCO CASK
SCALE: 1/12

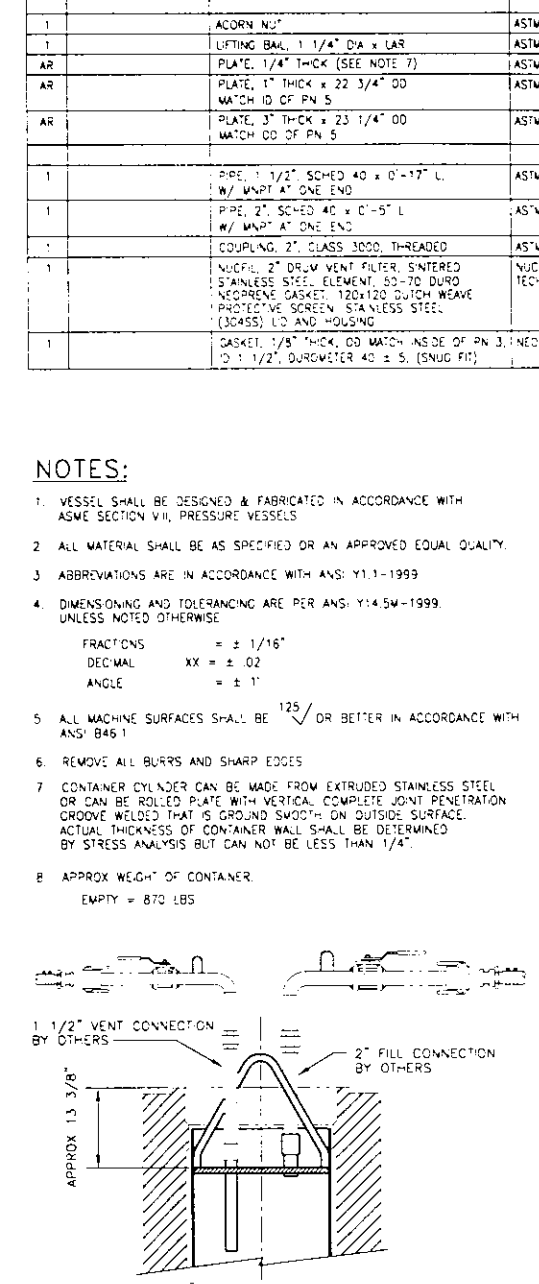

CONTAINER FILL CONNECTIONS
SCALE: 1/12

PARTS/MATERIAL LIST

STK MOD -010	PART/DASH NUMBER	NOMENCLATURE/DESCRIPTION	MATERIAL/REFERENCE	SHT	ITEM NO
X	-010	TYPE 1 CONTAINER ASSEMBLY		1	1
					2
1		ACORN NUT	ASTM A276-TP 304	1	3
1		LIFTING BAIL, 1 1/4" DIA x LAR	ASTM A276-TP 304	1	4
AR		PLATE, 1/4" THICK (SEE NOTE 7)	ASTM A240-TP 304L	1	5
AR		PLATE, 1" THICK x 22 3/4" OD MATCH ID OF PN 5	ASTM A240-TP 304L	1	6
AR		PLATE, 3" THICK x 23 1/4" OD MATCH OD OF PN 5	ASTM SA182 F304	1	7
					8
1		PIPE, 1 1/2", SCHED 40 x 0'-17" L W/ MNPT AT ONE END	ASTM A312-TP 304L	1	9
1		PIPE, 2", SCHED 40 x 0'-5" L W/ MNPT AT ONE END	ASTM A312-TP 304L	1	10
1		COUPLING, 2", CLASS 3000, THREADED	ASTM A182-TP 304L	1	11
1		NUCFIL 2" DRUM VENT FILTER, SINTERED STAINLESS STEEL ELEMENT, 60-70 DURO NEOPRENE GASKET, 120x120 DUTCH WEAVE PROTECTIVE SCREEN, STAINLESS STEEL (304SS) END AND HOUSING	NUCLEAR FILTER TECHNOLOGY, INC.	1	12
1		GASKET, 1/8" THICK, OD MATCH INSIDE OF PN 3, ID = 1/2", DUROMETER 40 ± 5, (SNUG FIT)	NEOPRENE	1	13

NOTES:

1. VESSEL SHALL BE DESIGNED & FABRICATED IN ACCORDANCE WITH ASME SECTION VIII, PRESSURE VESSELS
2. ALL MATERIAL SHALL BE AS SPECIFIED OR AN APPROVED EQUAL QUALITY.
3. ABBREVIATIONS ARE IN ACCORDANCE WITH ANSI Y1.1-1999
4. DIMENSIONING AND TOLERANCING ARE PER ANSI Y14.5M-1999. UNLESS NOTED OTHERWISE

   FRACTIONS = ± 1/16"
   DECIMAL XX = ± .02
   ANGLE = ± 1°

5. ALL MACHINE SURFACES SHALL BE 125√ OR BETTER IN ACCORDANCE WITH ANSI B46.1
6. REMOVE ALL BURRS AND SHARP EDGES
7. CONTAINER CYLINDER CAN BE MADE FROM EXTRUDED STAINLESS STEEL OR CAN BE ROLLED PLATE WITH VERTICAL COMPLETE JOINT PENETRATION GROOVE WELDED THAT IS GROUND SMOOTH ON OUTSIDE SURFACE. ACTUAL THICKNESS OF CONTAINER WALL SHALL BE DETERMINED BY STRESS ANALYSIS BUT CAN NOT BE LESS THAN 1/4".
8. APPROX WEIGHT OF CONTAINER.
   EMPTY = 870 LBS

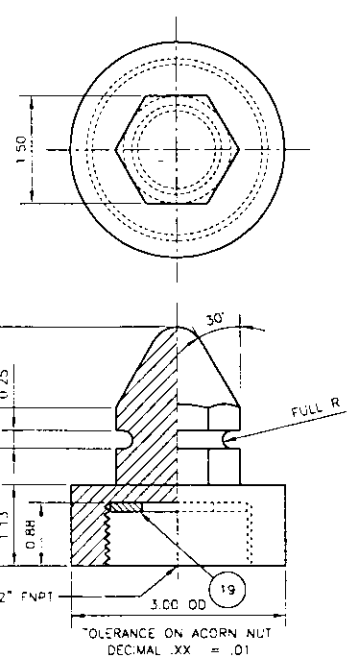

3 ACORN NUT
SCALE: 1/1

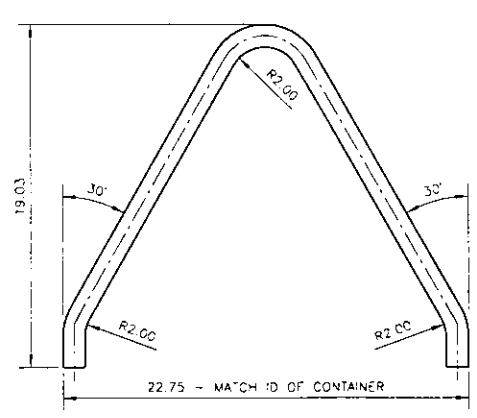

4 LIFTING BAIL
SCALE: 1/4

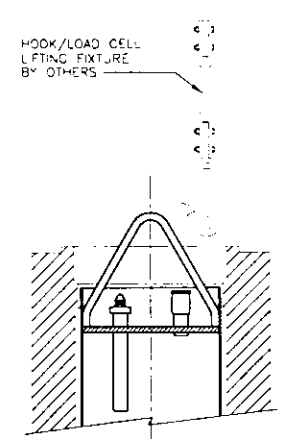

CONTAINER LIFTING DEVICE
SCALE: 1/12

CONCEPTUAL DESIGN

REFERENCE

FLUOR FEDERAL SERVICES

PROJECT T-PLANT SLUDGE HANDLING SYSTEM

U.S. DEPARTMENT OF ENERGY
Richland Operations Office

MECHANICAL
TYPE 1 CONTAINER
ASSEMBLY & INSTALLATION

ES-SHS-M100 0

DWG NO	TITLE
ES-SHS-01	DRAWING LIST & KEY MAP

DRAWING TRACEABILITY LIST

REF NUMBER	TITLE
NEXT USED ON	REFERENCES

REVISIONS

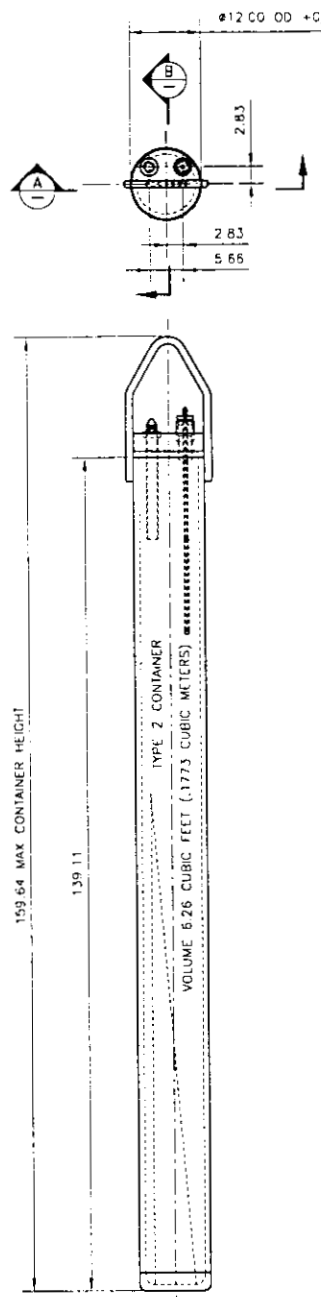

1 TYPE 2 CONTANER ASSEMBLY
SCALE: 1/12

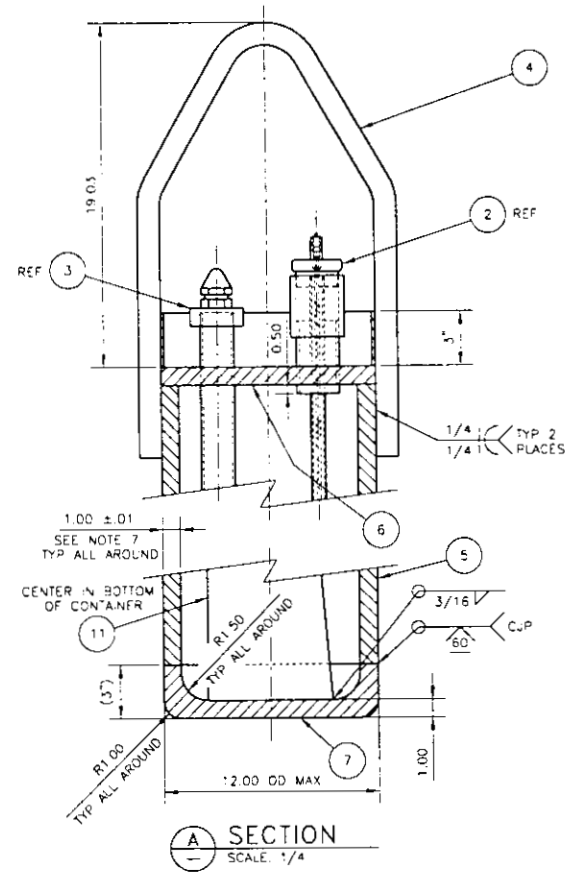

A SECTION
SCALE: 1/4

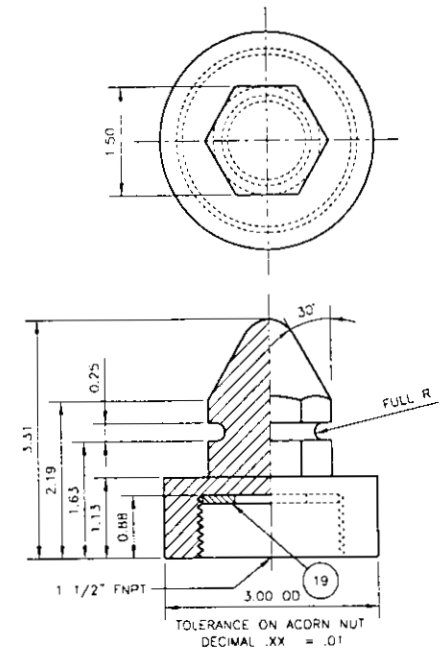

3 ACORN NUT
SCALE 1/1

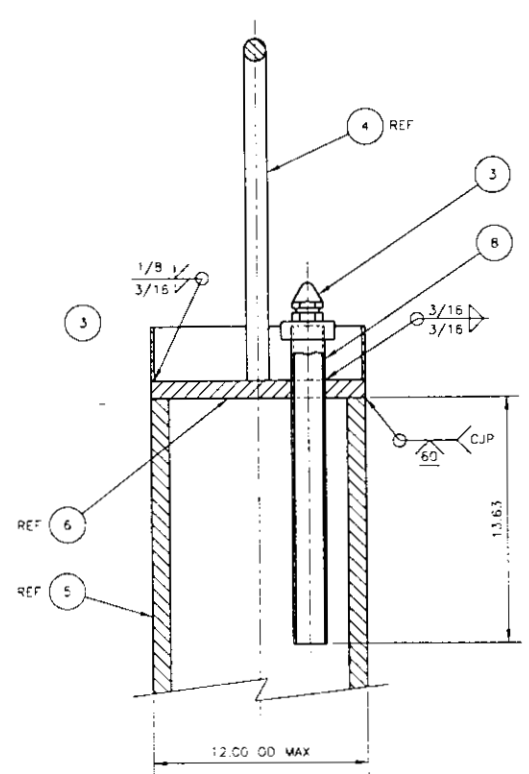

B SECTION
SCALE 1/4

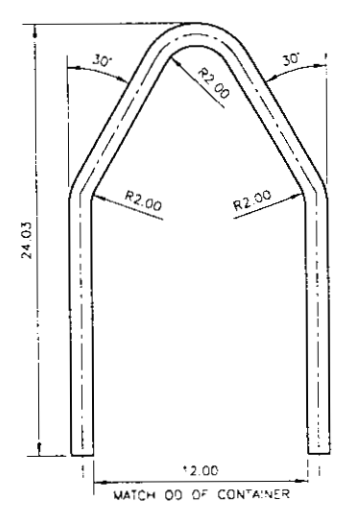

4 LIFTING BAIL
SCALE: 1/4

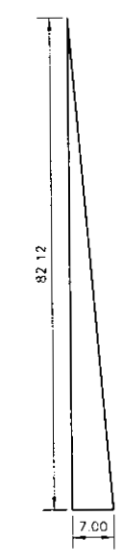

11 SEPARATOR
SCALE: 1/12

PARTS/MATERIAL LIST

QTY REQD -020	QTY REQD -010	PART/DASH NUMBER	NOMENCLATURE/DESCRIPTION	MATERIAL/REFERENCE	SHT	ITEM NO
		-010	TYPE 2 CONTAINER ASSEMBLY		1	1
	1	-020	VENT ASSEMBLY		2	2
	1		ACORN NUT, 3" DIA x LAR	ASTM A276-TP 304	1	3
	1		LIFTING BAIL, 1 1/4" DIA x LAR	ASTM A276-TP 304	1	4
	AR		PLATE, 1" THICK (SEE NOTE 7)	ASTM A240-TP 304L	1	5
	1		PLATE, 1" THICK x 12" OD MATCH OD OF PN 5	ASTM A240-TP 304L	1	6
	1		PLATE, 3" THICK x 12" OD MATCH OD OF PN 5	ASTM SA182 F304	1	7
	1		PIPE, 1 1/2", SCHED 40 x 0'-17 5/8" L, W/ MNPT AT ONE END	ASTM A312-TP 304L	1	8
1			PIPE, 2", SCHED 40 x 0'-4 1/2" L, W/ MNPT AT ONE END	ASTM A312-TP 304L	2	9
1			COUPLING, 2", CLASS 3000, THREADED	ASTM A182-TP 304L	1	10
	1		SEPERATOR, 1/2" PLATE	ASTM A240-TP 304L	1	11
			RING, 3/16" PLATE, MATCH OD OF PN 5	ASTM A240-TP 304L	1	12
1			VALVE BODY, 21/32" DIA x LAR	ASTM A276-TP 304	2	13
1			VALVE STEM, 7/16" DIA x LAR	ASTM A276-TP 304	2	14
1			PLUG MODIFICATION, 2", CLASS 3000, THREADED	ASTM A182-TP 304L	2	15
1			TUBING, 1/4" W/ .025 WALL, LENGTH TBD	ANY 300 SERIES SST	2	16
1			PIPE, 1/2", SCHED 40S, LENGTH TBD	ASTM A312-TP 304L	2	17
1			PIPE CAP, 1/2", SCHED 40S, BUTT WELD	ASTM A403-TP 304	2	18
1			GASKET, 1/8" THICK, OD MATCH INSIDE OF PN 3, ID 1 1/2", DUROMETER 40 ± 5 (SNUG FIT)	NEOPRENE	1	19

NOTES:

1. VESSEL SHALL BE DESIGNED & FABRICATED IN ACCORDANCE WITH ASME SECTION VIII, PRESSURE VESSELS
2. ALL MATERIAL SHALL BE AS SPECIFIED OR AN APPROVED EQUAL QUALITY.
3. ABBREVIATIONS ARE IN ACCORDANCE WITH ANSI Y1.1-1999
4. DIMENSIONING AND TOLERANCING ARE PER ANSI Y14.5M-1999 UNLESS NOTED OTHERWISE

   FRACTIONS = ± 1/16"
   DECIMAL XX = ± .02
   DECIMAL XXX = ± .005
   ANGLE = ± 1°

5. ALL MACHINE SURFACES SHALL BE 125√ OR BETTER IN ACCORDANCE WITH ANSI B46.1
6. REMOVE ALL BURRS AND SHARP EDGES.
7. CONTAINER CYLINDER CAN BE MADE FROM EXTRUDED STAINLESS STEEL OR CAN BE ROLLED PLATE WITH VERTICAL COMPLETE JOINT PENETRATION GROOVE WELDED THAT IS GROUND SMOOTH ON OUTSIDE SURFACE. ACTUAL THICKNESS OF CONTAINER WALL SHALL BE DETERMINED BY STRESS ANALYSIS BUT CAN NOT BE LESS THAN 1"
8. APPROX WEIGHT OF CONTAINER
   EMPTY = 1560 LBS

CONCEPTUAL DESIGN

REFERENCE

FLUOR FEDERAL SERVICES

PROJECT: T-PLANT, SLUDGE HANDLING SYSTEM

NAME	DATE	COMPANY
DRAWN BY SD CHRISTENSEN		

U.S. DEPARTMENT OF ENERGY
Richland Operations Office

MECHANICAL
TYPE 2 CONTAINER
ASSEMBLY & INSTALLATION

SIZE F | BLDG NO 221-T | INDEX NO | DWG NO ES-SHS-M200 | REV 0
SCALE SHOWN | SHEET 1 OF 2

BLDG. NO.
INDEX NO.
THIS SPACE RESERVED FOR BUILDING AND INDEX NUMBERS
DWG NO ES-SHS-M200 | SH 1 OF 2 | REV 0

DWG NO	TITLE
ES-SHS-01	DRAWING LIST & KEY MAP

DRAWING TRACEABILITY LIST

REF NUMBER	TITLE

REFERENCES

NEXT USED ON

REV NO	DESCRIPTION	REV DATE	ENGR	COMPANY

REVISIONS

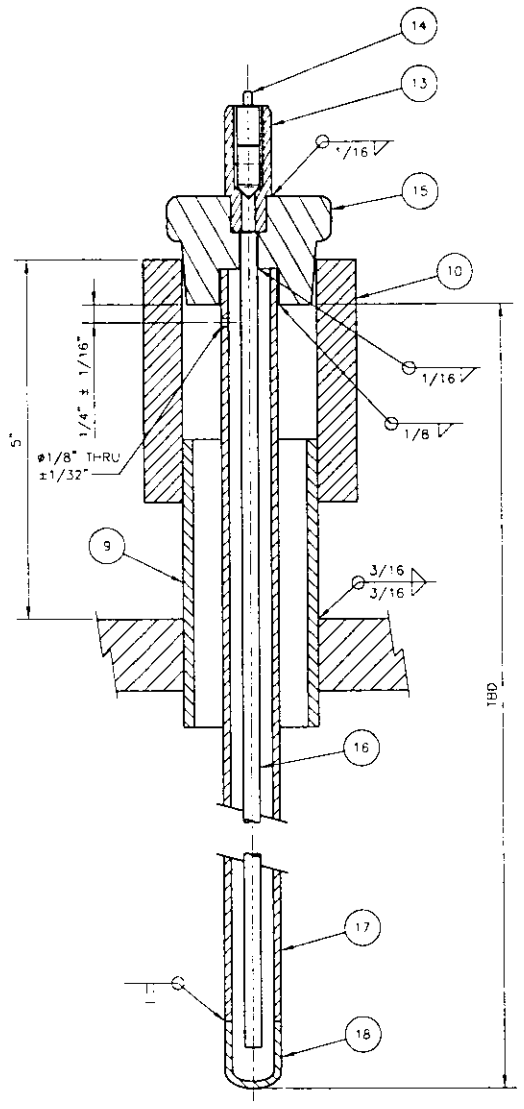

1 VENT ASSEMBLY
SCALE: FULL

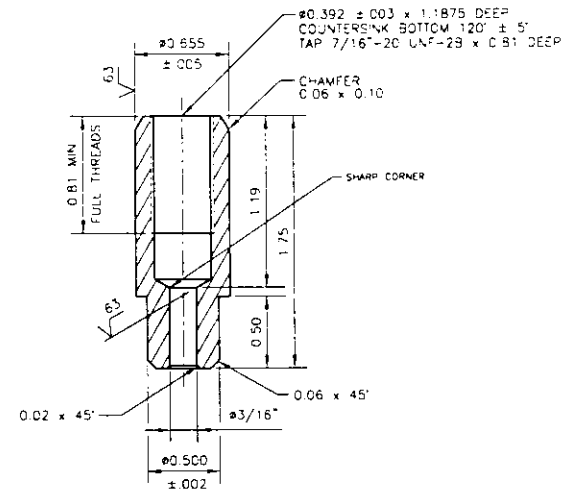

13 VALVE BODY
SCALE: 2X

GENERAL TOLERANCE UNLESS OTHERWISE SPECIFIED ±.010

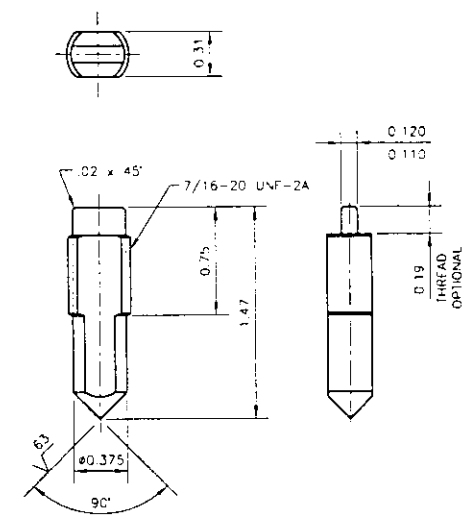

14 VALVE STEM
SCALE: 2X

GENERAL TOLERANCE UNLESS OTHERWISE SPECIFIED ±.010

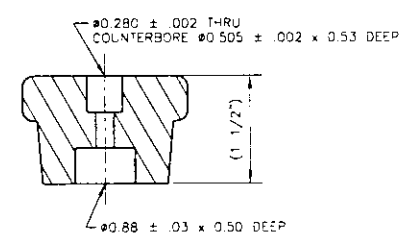

15 PLUG MODIFICATION
SCALE: FULL

FOR NOTES AND PARTS LIST SEE SHEET 1

CONCEPTUAL DESIGN

REFERENCE

FLUOR FEDERAL SERVICES

PROJECT: T-PLANT, SLUDGE HANDLING SYSTEM

NAME	DATE	COMPANY
DRAWN BY: RS CHRISTENSEN		

U.S. DEPARTMENT OF ENERGY
Richland Operations Office

MECHANICAL
TYPE 2 CONTAINER
MISC PARTS

SIZE	BLDG NO	INDEX NO	DWG NO	REV
F	221-T		ES-SHS-M200	0

SCALE: SHOWN | SHEET 2 OF 2

BLDG NO | INDEX NO | REV 0 | SH 2 OF 2 | DWG NO ES-SHS-M200

THIS SPACE RESERVED FOR BUILDING AND INDEX NUMBERS

DWG NO	TITLE
DRAWING TRACEABILITY LIST	

REF NUMBER	TITLE
ES-SHS-G1	DRAWING LIST & KEY MAP
REFERENCES	
NEXT USED ON	

REVISIONS

PARTS/MATERIAL LIST

QTY REQD -010	PART/DASH NUMBER	NOMENCLATURE/DESCRIPTION	MATERIAL/REFERENCE	S-H	ITEM NO
X	-010	TYPE 2 SPACER ASSEMBLY		*	1
					2
					3
4		LONG GUIDE RAIL, BAR, 1/4"x5"x12' 2-5/8" L	ASTM A240-TP 304	*	4
12		SHORT GUIDE RAIL, BAR, 1/4"x5"x10" L	ASTM A240-TP 304L	1	5
3		GUIDE TUBE, BAR, 1/4"x5"x4' 5-5/8" L	ASTM A240-TP 304L	1	6

NOTES:

1. ALL MATERIAL SHALL BE AS SPECIFIED OR AN APPROVED EQUAL QUALITY.
2. ABBREVIATIONS ARE IN ACCORDANCE WITH ANSI Y1.1-1999
3. DIMENSIONING AND TOLERANCING ARE PER ANSI Y14.5M-1999 UNLESS NOTED OTHERWISE

   FRACTIONS = ± 1/16"
   DEMICALS XX = ± .13
   ANGLE = ± 1°

4. ALL MACHINE SURFACES SHALL BE 125√ OR BETTER IN ACCORDANCE WITH ANSI B46.1
5. REMOVE ALL BURRS AND SHARP EDGES
6. WELD PER AWS D 1.6. WELDING QUALIFICATION PER ASME IX ARE ACCEPTABLE. VISUALLY INSPECT (VT) WELDS AT FINAL PASS
7. APPROX WEIGHT OF SPACER, 290 LBS
8. TYPE 2 SPACER ASSEMBLY IS TO BE USED IN THE MCO CASK AND IN THE OVERPACK

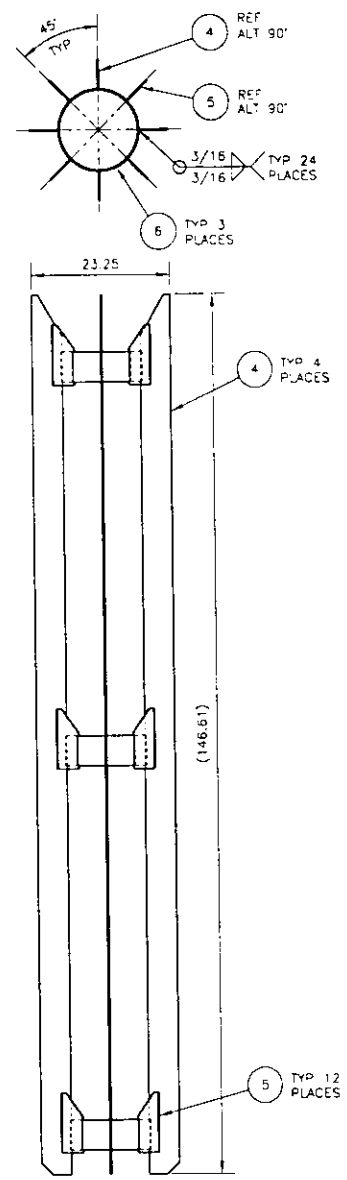

1 TYPE 2 SPACER ASSEMBLY
SCALE: 1/12

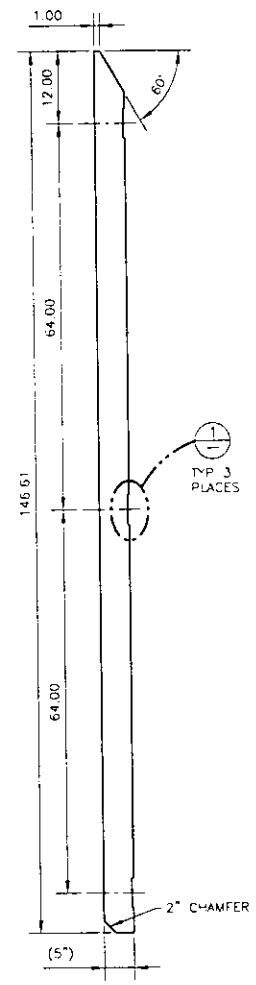

4 LONG GUIDE RAIL
SCALE: 1/12

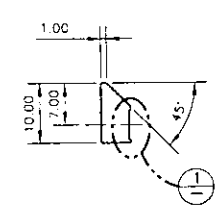

5 SHORT GUIDE RAIL
SCALE: 1/4

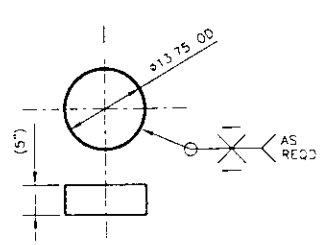

6 GUIDE TUBE
SCALE: 1/4

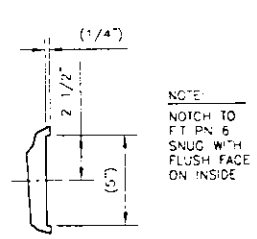

1/4 DETAIL
SCALE: 1/4

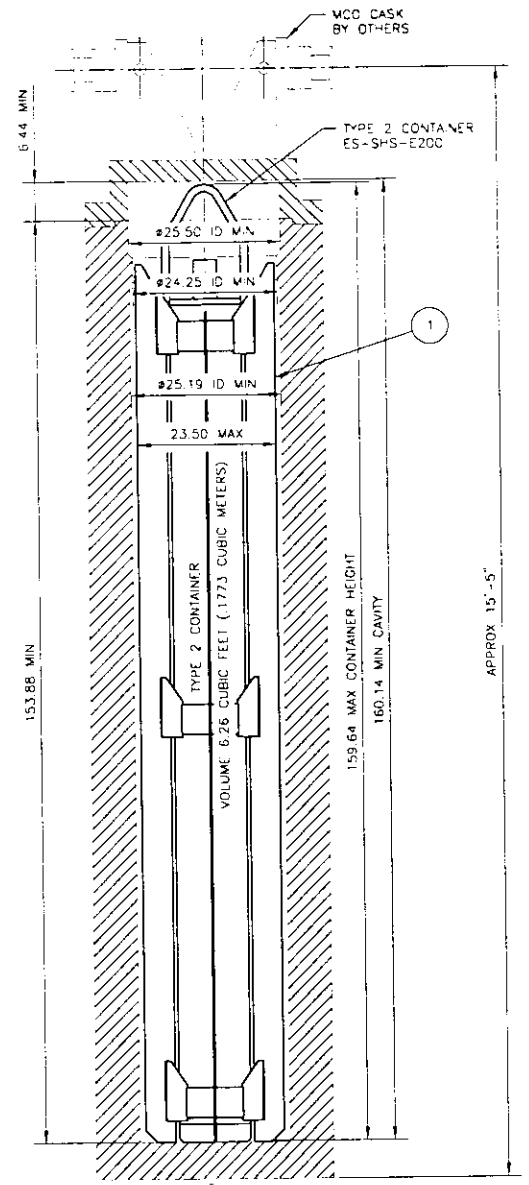

TYPE 2 CONTAINER
INSTALLATION INTO MCO CASK
SCALE 1/12

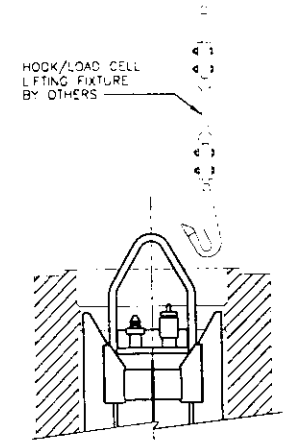

CONTAINER LIFTING DEVICE
SCALE 1/12

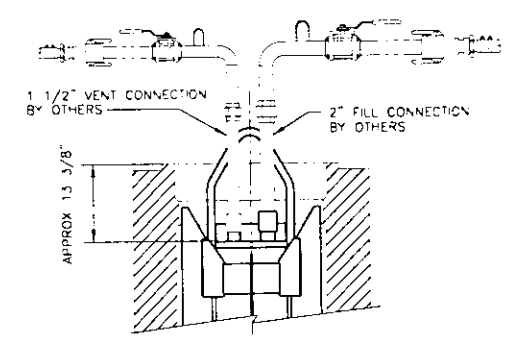

CONTAINER FILL CONNECTIONS
SCALE 1/12

CONCEPTUAL DESIGN

REFERENCE

FLUOR FEDERAL SERVICES

PROJECT T-PLANT SLUDGE HANDLING SYSTEM

NAME	DATE
DESIGN BY S.D. CHRISTENSEN	

U.S. DEPARTMENT OF ENERGY
Richland Operations Office

MECHANICAL
TYPE 2 CONTAINER
SPACER ASSY & INST

SIZE F | BLDG NO 221-T | INDEX NO | DWG NO ES-SHS-M300 | REV 0
SCALE SHOWN | COT | SHEET 1 OF 1

BLDG NO.
INDEX NO.
THIS SPACE RESERVED FOR BUILDING AND INDEX NUMBERS
DWG NO ES-SHS-M300 | SH 1 | REV 0

DWG NO	TITLE
ES-SHS-G1	DRAWING LIST & KEY MAP

DRAWING TRACEABILITY LIST

REF NUMBER	TITLE

REFERENCES

NEXT USED ON

REV NO	DESCRIPTION	DATE	DESIGN AUTHORITY

REVISIONS

J-40

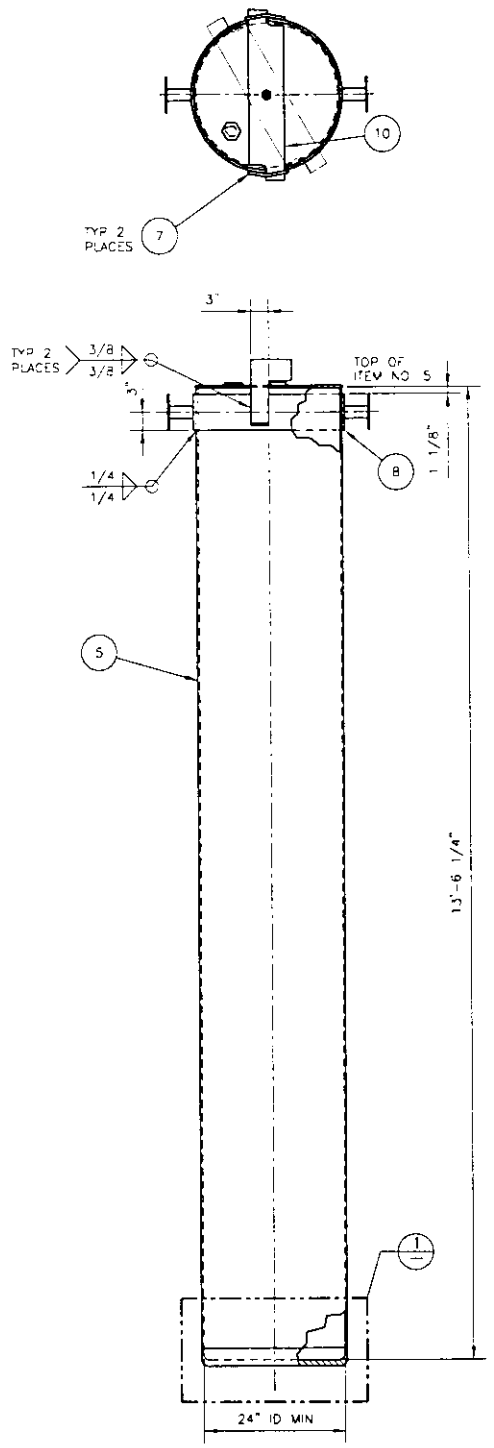

1 OVERPACK ASSEMBLY
SCALE: 1"=1'-0"

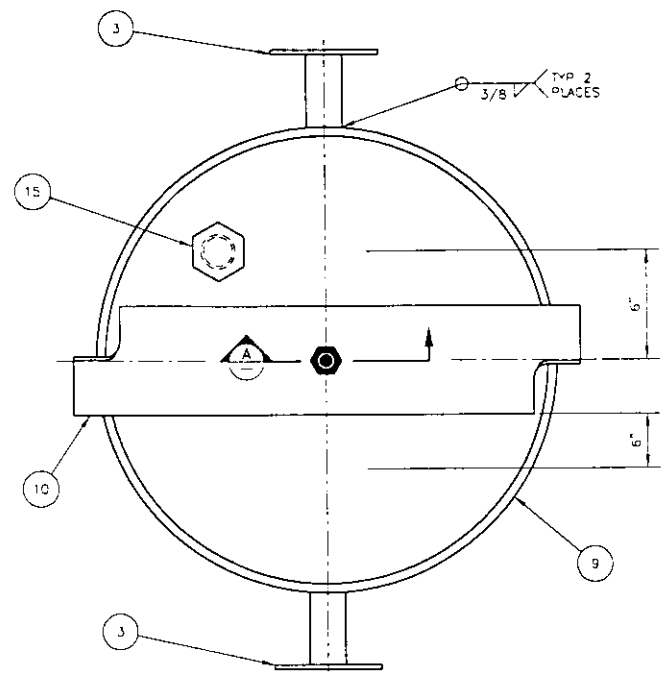

2 COVER ASSEMBLY
SCALE: 1/4

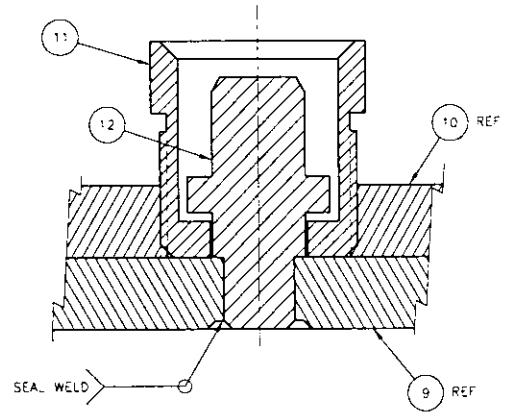

A SECTION
SCALE: 2X

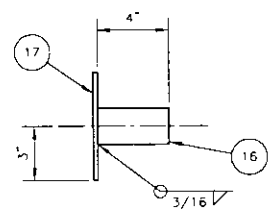

3 LIFTING LUG ASSEMBLY
SCALE: 1/4

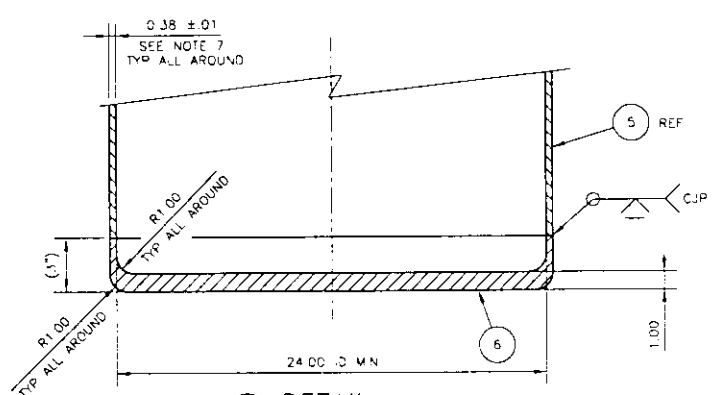

1 DETAIL
SCALE 1/4

PARTS/MATERIAL LIST

QTY REQD -030	QTY REQD -020	QTY REQD -010	PART/DASH NUMBER	NOMENCLATURE/DESCRIPTION	MATERIAL/REFERENCE	SHT	ITEM NO
		X	-010	OVERPACK ASSEMBLY		1	1
	X	1	-020	COVER ASSEMBLY		1	2
X		2	-030	LIFTING LUG ASSEMBLY		1	3
							4
		AR		PLATE, 3/8" THICK (SEE NOTE 7)	ASTM A240-TP 304L	1	5
		1		PLATE, 3" THICK MATCH OD OF PN 5	ASTM SA182 F304	1	6
		2		BRACE LUG, PLATE, 1" THICK	ASTM A240-TP 304L	2	7
		1		STIFFENER RING, FLAT BAR, 1/2" x 6" x LAR	ASTM A276-TP 304L	1	8
	1			COVER LID, PLATE, 1" THICK x 25" DIA	ASTM A240-TP 304L	2	9
	1			COVER BRACE, FLAT BAR, 1" x 6" x LAR	ASTM A276-TP 304L	2	10
	1			COVER BRACE SCREW, 1 1/2" HEX x LAR	ASTM A276-TP 304	2	11
	1			COVER BRACE SCREW RESTRAINT, 1" DIA x LAR	ASTM A276-TP 304	2	12
						1	13
						1	14
	1			NUCFIL, 2" DRUM VENT FILTER, SINTERED STAINLESS STEEL ELEMENT, 50-70 DURO NEOPRENE GASKET, 120x120 DUTCH WEAVE PROTECTIVE SCREEN, STAINLESS STEEL (304SS) LID AND HOUSING	NUCLEAR FILTER TECHNOLOGY, INC	1	15
1				RD BAR, 2" DIA x 4" LONG	ASTM A276-TP 304	1	16
1				1/4" PLATE, 6" DIA	ASTM A240-TP 304L	1	17

NOTES:

1. ALL MATERIAL SHALL BE AS SPECIFIED OR AN APPROVED EQUAL QUALITY
2. ABBREVIATIONS ARE IN ACCORDANCE WITH ANSI Y1.1-1999
3. DIMENSIONING AND TOLERANCING ARE PER ANSI Y14.5M-1999 UNLESS NOTED OTHERWISE

   FRACTIONS = ± 1/16
   DECIMALS .XX = ± .02
   DECIMALS .XXX = ± .005
   ANGLE = ± 1°

4. ALL MACHINE SURFACES SHALL BE 125/ OR BETTER IN ACCORDANCE WITH ANSI B46.1
5. REMOVE ALL BURRS AND SHARP EDGES.
6. WELD PER AWS D 1.6. WELDING QUALIFICATION PER ASME IX ARE ACCEPTABLE. VISUALLY INSPECT (VT) WELDS AT FINAL PASS.
7. CONTAINER CYLINDER CAN BE MADE FROM EXTRUDED STAINLESS STEEL OR CAN BE ROLLED PLATE WITH VERTICAL COMPLETE JOINT PENETRATION GROOVE WELDED THAT IS GROUND SMOOTH ON OUTSIDE SURFACE. ACTUAL THICKNESS OF CONTAINER WALL SHALL BE DETERMINED BY STRESS ANALYSIS BUT CAN NOT BE LESS THAN 3/8"
8. APPROX WEIGHT OF CONTAINER
   EMPTY = 2,010 LBS

CONCEPTUAL DESIGN

REFERENCE

FLUOR FEDERAL SERVICES

PROJECT: T-PLANT, SLUDGE HANDLING SYSTEM

BLDG NO.

INDEX NO.

THIS SPACE RESERVED FOR BUILDING AND INDEX NUMBERS

DWG NO ES-SHS-M400 REV 0

NAME	DATE	COMPANY
DRAWN BY R.J. HARSTENSEN		

U.S. DEPARTMENT OF ENERGY
Richland Operations Office

MECHANICAL
TYPE 1 & 2 CONTAINER
OVERPACK ASSEMBLY

SIZE F | BLDG NO 221-T | INDEX NO | DWG NO ES-SHS-M400 | REV 0

SCALE SHOWN | CODE | SHEET 1 OF 2

DWG NO	TITLE
DRAWING TRACEABILITY LIST	

REF NUMBER	TITLE
ES-SHS-01	DRAWING LIST & KEY MAP
REFERENCES	
NEXT USED ON	

REV NO	DESCRIPTION	REV DATE	ENGR COMPANY
	REVISIONS		

DESIGN AUTHORITY

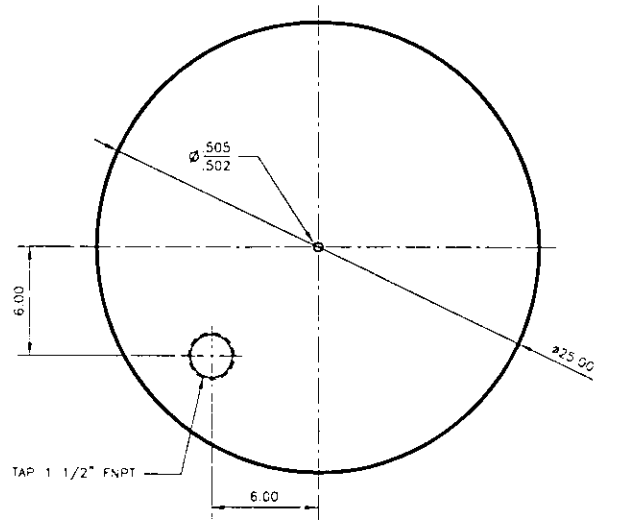

9 COVER LID
SCALE: 1/4

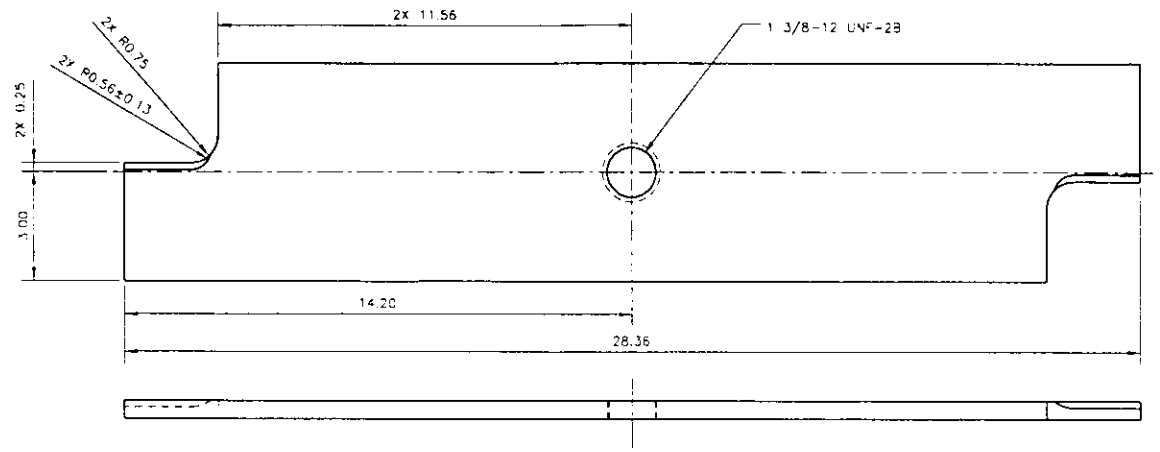

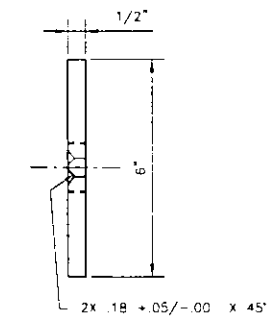

10 COVER BRACE
SCALE: 1/2

AFTER MACHINING, SOLUTION & PRECIPITATION HARDEN PER ASTM B637-90
FURNISH CERTIFIED RECORDS OF HEAT TREATING PER TABLE 4 OF ASTM B637 B637-90

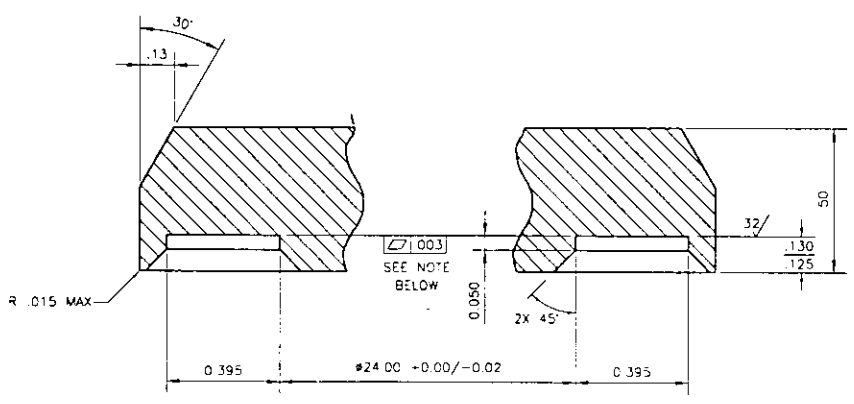

2 DETAIL
SCALE: 4X

GROOVE TO BE MACHINED AFTER ANY WELDING TO COVER ASSEMBLY HAS BEEN COMPLETED TO PREVENT WORPAGE IN GROOVE

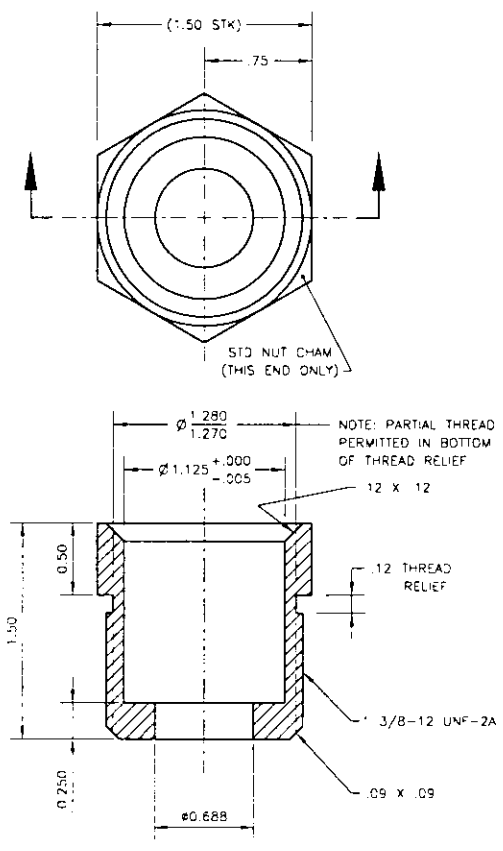

11 COVER BRACE SCREW
SCALE: 2X

BEFORE ASSEMBLY, LUBRICATE INTERNAL THREADS ON COVER BRACE (ITEM 10), AND EXTERNAL THREADS AND NOSE OF COVER BRACE SCREW (ITEM 11) WITH "NEVER SEEZ" NUCLEAR GRADE NICKEL BASE LUBRICANT

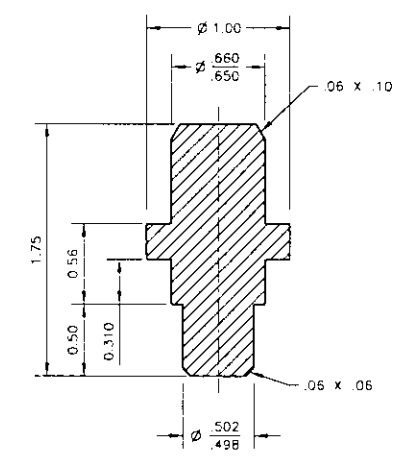

12 COVER BRACE SCREW RESTRAINT
SCALE: 2X

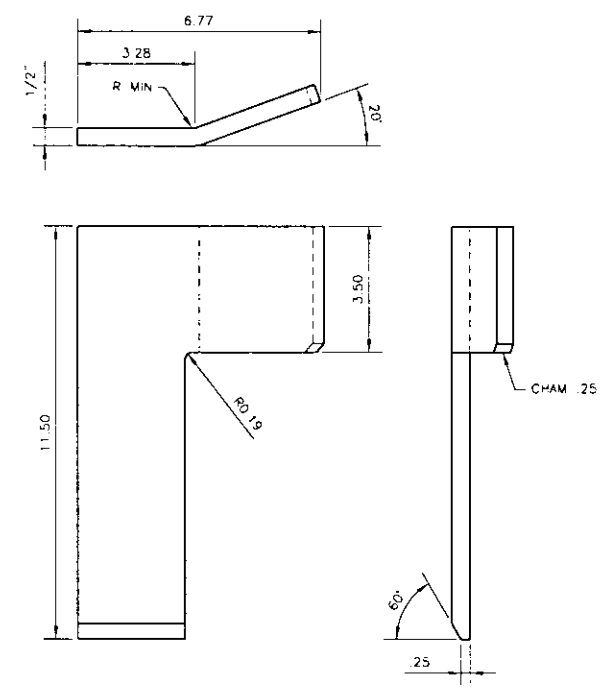

7 BRACE LUG
SCALE: 1/2

FOR NOTES AND PARTS LIST SEE SHEET 1

CONCEPTUAL DESIGN

REFERENCE

FLUOR FEDERAL SERVICES

PROJECT: T-PLANT, SLUDGE HANDLING SYSTEM

NAME	DATE	COMPANY
RS CHRISTENSEN		

U.S. DEPARTMENT OF ENERGY
Richland Operations Office

MECHANICAL
TYPE 1 & 2 CONTAINER
OVERPACK MISC DETAILS

SIZE F | BLDG NO 221-T | INDEX NO | DWG NO ES-SHS-M400 | REV 0

SCALE SHOWN | SHEET 2 OF 2

DWG NO	TITLE
DRAWING TRACEABILITY LIST	

REF NUMBER	TITLE
ES-SHS-G1	DRAWING LIST & KEY MAP

REFERENCES

NEXT USED ON

REVISIONS

BLDG. NO.

INDEX NO

THIS SPACE RESERVED FOR BUILDING AND INDEX NUMBERS

DWG NO ES-SHS-M400 SH 2 OF 2 REV 0