S

18 STA. 3

JUL 3 0 2001

ENGINEERING DATA TRANSMITTAL

1. EDT 631487

2. To: (Receiving Organization) DISTRIBUTION	3. From: (Originating Organization) INTERIM STABILIZATION	4. Related EDT No.: N/A
5. Proj./Prog./Dept./Div.: INTERIM STABILIZATION	6. Design Authority/Design Agent/Cog. Engr.: W. F. ZUROFF	7. Purchase Order No.: N/A
8. Originator Remarks: ATTACHED IS THE SOFTWARE PROGRAM DOCUMENTATION FOR PUMPING INSTRUMENTATION AND CONTROL SKID "X". USQ TF-00-0619, Rev2		9. Equip./Component No.: N/A
		10. System/Bldg./Facility: 241-G
		12. Major Assm. Dwg. No.: N/A
11. Receiver Remarks: NONE	11A. Design Baseline Document? ☒ Yes ☐ No	13. Permit/Permit Application No.: N/A
		14. Required Response Date: N/A

15. DATA TRANSMITTED

(A) Item No.	(B) Document/Drawing No.	(C) Sheet No.	(D) Rev. No.	(E) Title or Description of Data Transmitted	(F) Approval Designator	(G) Reason for Transmittal	(H) Originator Disposition	(I) Receiver Disposition
1	RPP-7009	N/A	0	PLC/DTAM SOFTWARE PROGRAMS	Q	1	1	1
				FOR PUMPING				
				INSTRUMENTATION AND				
				CONTROL SKID "X"				

16. KEY

Approval Designator (F)	Reason for Transmittal (G)	Disposition (H) & (I)
E, S, Q, D OR N/A (See WHC-CM-3-5, Sec. 12.7)	1. Approval 2. Release 3. Information 4. Review 5. Post-Review 6. Dist. (Receipt Acknow. Required)	1. Approved 2. Approved w/comment 3. Disapproved w/comment 4. Reviewed no/comment 5. Reviewed w/comment 6. Receipt acknowledged

17. SIGNATURE/DISTRIBUTION (See Approval Designator for required signatures)

(G) Reason	(H) Disp.	(J) Name	(K) Signature	(L) Date	(M) MSIN	(G) Reason	(H) Disp.	(J) Name	(K) Signature	(L) Date	(M) MSIN
1		Design Authority W.F. ZUROFF	[signature]	7/27/01	S7-30						
1	1	Design Agent B.R. JOHNS	BRJohns	7/19/01	S7-24						
1	1	Cog. Eng. B.R. JOHNS	BRJohns	7/19/01	S7-24						
1	1	Cog. Mgr. T.M. HORNER	T.M. Horner	7/27/01	S7-24						
1	1	QA T.J. VOLKMAN	[signature]	7/27/01							
		Safety N/A									
		Env. N/A									

18.	19.	20.	21. DOE APPROVAL (if required)
BRJohns B.R. JOHNS 7/19/01 Signature of EDT Originator / Date	T.M. Horner T.M. HORNER 7/27/01 Authorized Representative for Receiving Organization / Date	[signature] W.F. ZUROFF 7/27/01 Design Authority/ Cognizant Manager / Date	Ctrl No. N/A ☐ Approved ☐ Approved w/comments ☐ Disapproved w/comments

PLC/DTAM SOFTWARE PROGRAMS FOR PUMPING INSTRUMENTATION AND CONTROL SKID "X"

T. M. HORNER
CH2MHILL HANFORD GROUP, INC
Richland, WA 99352
U.S. Department of Energy Contract DE-AC27-99RL14047

EDT/ECN: 631467 UC:
Cost Center: 74D00 Charge Code: 110442
B&R Code: EW3120071 Total Pages: 181

Key Words: PLC, DTAM, LADDER LOGIC, PICS, SKID, INTERIM STABILIZATION, SALT WELL

Abstract:
This document describe the software programs for the Programmable Logic Controller and the Data Table Access Module for Pumping Instrumentation and Control skid "X". The Appendices contains copies of the printouts of these software programs.
*Allen-Bradley is a registered trademark of the Allen-Bradley Company, Inc.

TRADEMARK DISCLAIMER. Reference herein to any specific commercial product, process, or service by trade name, trademark, manufacturer, or otherwise, does not necessarily constitute or imply its endorsement, recommendation, or favoring by the United States Government or any agency thereof or its contractors or subcontractors.

Printed in the United States of America. To obtain copies of this document, contact: Document Control Services, P.O. Box 950, Mailstop H6-08, Richland WA 99352, Phone (509) 372-2420; Fax (509) 376-4989.

Barbara Wolski 7/30/01
Release Approval Date

DATE: JUL 3 0 2001
STA: 3
HANFORD RELEASE
ID: 18
Release Stamp

Approved For Public Release

TABLE OF CONTENTS

1.0 INTRODUCTION 1
1.1 BACKGROUND 1
1.2 SOFTWARE PROGRAM CONTROL 1
2.0 FUNCTIONAL REQUIREMENTS 2
2.1 BASICS 2
2.2 FSAR REQUIREMENTS 2
2.3 COMPLIANCE WITH FSAR FUNCTIONAL REQUIREMENTS AND CONTROLS 4
2.4 TSR REQUIREMENTS 7
3.0 SOFTWARE DESCRIPTION 8
3.1 BY-105 SOFTWARE 8
3.2 PLC INPUTS/OUTPUTS 8
3.3 DTAM DISPLAYS, DATA ENTRY AND ALARMS 10
3.4 JET PUMP INTERLOCKS 11
3.5 INTERLOCK and ALARM CONDITIONS 12
3.6 PIC SKID COMMUNICATIONS 14
4.0 SOFTWARE PROGRAM DESCRIPTION 15
4.1 Program locations 15
4.2 Program layout 15
4.3 Inputs and Outputs 16
4.4 Temperature 17
4.5 Alarms 17
4.6 Pump Control 18
4.7 Program Set Points 18
4.8 BY-Farm Skids 19
4.9 Software forces 19
APPENDICES 20

ACRONYMS AND ABBREVIATIONS

PLC - Programmable Logic Controller
DTAM - Data Table Access Module
OCS - Operator Control Station
FSAR - Final Safety Analysis Report
TSR - Technical Safety Requirements
COB - Clean Out Box
LFL - Lower Flammability Limit
LCO - Limiting Condition for Operation
DOV - Diaphragm Operated Valve
RFPT - Recirculation Flush Pressure Transducer
JFPT - Jumper Flush Pressure Transducer
FGM - Flammable Gas Monitor
CGM - Combustible Gas Monitor
PXPT - Pump Transfer Pressure Transducer
OTP - Operational Test Procedure
ATP - Acceptance Test Procedure

PLC/DTAM SOFTWARE PROGRAMS FOR PUMPING INSTRUMENTATION AND CONTROL SKID "X"

1.0 INTRODUCTION

1.1 BACKGROUND

This document describes the software programs for the Allen-Bradley SLC 500 programmable logic controller (PLC) and the Allen-Bradley DTAM PLUS operator interface module used on Pumping Instrumentation and Control (PIC) skid "X". The software programs for the SLC 500 and DTAM Plus are based on the core programs provided by Allen-Bradley. The PLC and DTAM software programs on skid "D" for SX-104 are the baseline programs. These baselines will be tailored for each individual BY-farm skid. An Acceptance Test Procedure (ATP) and an Operational Test Procedure (OTP) verify that the software programs meet the specific requirements for BY-105 pumping.

This document represents the final PLC and DTAM programs for PIC skid "X" at BY-105. These programs were printed out after the performance of the OTP. The OTP acts as the final qualification test for the software programs. Functional requirements and details of the PLC ladder logic are described in this document. The final programs entered into the PLC and DTAM Plus are included as Appendices to this document.

1.2 SOFTWARE PROGRAM CONTROL

This is the official software control document for the PLC and DTAM program for PIC skid "X". Changes to the programs shall be documented as changes and/or revisions to this document. This is to comply with HNF-5034 for software configuration control for the PIC skid software programs.

2.0 FUNCTIONAL REQUIREMENTS

2.1 BASICS

The basic functional requirements for the software program are identified below.

2.1.1 Control the jet pump and dilution pump

2.1.2 Monitor conditions and provide alarm and pump shutdown for off normal conditions

2.1.3 Provide PIC status information to the Operator Control Station (OCS) and other PIC skids that are on the same transfer line

2.1.4 Provide flow information on the amount of waste being pumped

PIC skid "X" meets the functional requirements in the Authorization Basis documents that include the Final Safety Analysis Report, HNF-SD-WM-SAR-067, Revision 2; and Technical Safety Requirements, HNF-SD-WM-TSR-006, Revision 2. The applicable sections of the FSAR and TSR are listed below along with the requirements for the PIC skid controls.

2.2 FSAR REQUIREMENTS

FSAR chapter 2, Section 2.5.2, Waste Transfer identifies the following for PIC skid functional characteristics and controls and monitoring that impact the software program for the PIC skid PLC.

2.2.1 Section 2.5.2.1 states the salt well pump is allowed to run in an automatic mode.

2.2.2 Section 2.5.2.1.3 states the JR-1 valve has position indication that is monitored by the control system.

2.2.3 Section 2.5.2.1.4 has the following requirements for instrumentation and control.

PUMP DISCHARGE PRESSURE SENSORS: One discharge header pressure sensor provides a signal to the PLC for monitoring low and high pressures. A low or high pressure determined by the PLC will cause an alarm and pump shutdown. (See USQ evaluation TF-99-0830, rev. 0)

FLUSH WATER SUPPLY PRESSURE DETECTION SYSTEM: A pressure switch on the flush water line is activated upon change in pressure in the supply line, which results in an alarm and pump trip.

PROCESS FLOW TRANSMITTER AND TOTALIZER: A flow totalizer displays flow rates and totals gallons pumped.

RAW WATER FLOW TO PUMP TRANSMITTER: A flow switch is installed to monitor the injection water flow to the canned motor. The pump will shut down or not start on low flow.

PUMP SUCTION AND DISCHARGE PRESSURE TRANSMITTERS: Pump suction and discharge pressure transmitters provide pressure readings. The transmitters are connected to the control systems and can be used as a backup to the pressure switches for pressure interlocks.

PUMP BEARING MOTOR: (Monitor) A bearing monitor is installed on the canned motor to monitor bearing wear. An alarm is provided for bearing wear reaching a certain state.

PUMP POWER MONITOR: A power monitor is installed near the motor starter to monitor pump electrical power. The pump shuts down if motor power goes outside the preset range.

PUMP RESISTANCE TEMPERATURE DETECTORS (RTD): RTD's are installed in the motor windings to monitor motor temperature. The pump will shut down if temperature reaches a preset value.

SEAL WATER TEMPERATURE WELL: A thermocouple monitors the injection water temperature. A indication is provided at the skid of the measured temperature.

2.2.4 Section 2.5.2.1.5 states that salt well pumps on different tanks pumping into a common line are interlocked with each other. The control is to provide a safe and orderly shutdown of the group of pumps in the event a single pump shuts down.

2.2.5 Section 2.5.2.1.5.4 states that leak detectors connected to the skid control system are interlocked such that upon detection of a leak, a pump shutdown occurs along with audible and visual alarms.

2.3 COMPLIANCE WITH FSAR FUNCTIONAL REQUIREMENTS AND CONTROLS

2.3.1 Software design requirements must meet the functional requirements and controls stated above. The paragraphs below describe how these are met.

2.3.1.1 Salt well pump automatic mode:
An Auto/Manual selection is provided on the DTAM, which interfaces, with the PLC ladder logic.

2.3.1.2 JR-1 valve position indication:
Transducers LS-1 and LS-2 input to the PLC. The PLC logic interprets these inputs and the DTAM displays the JR-1 valve position as "PROCESS" or as "NON-PROCESS" when JR-1 is in the flush or prime positions.

2.3.1.3 Low discharge pressure causes alarm and pump shutdown:
Pressure sensor SALW-PT-6015X inputs to the PLC. The PLC processes an alarm for pressures below 30psig or above 140psig. The alarm signal goes to the DTAM and strobe light. A low-pressure condition opens the pump motor control interlock circuit after a 30 second delay causing the pump to shutdown. The high-pressure condition opens the pump motor control interlock circuit after a 3 second delay causing the pump to shutdown.

2.3.1.4 A pressure transducer on the flush water line causes alarm and pump shutdown:
Pressure transducer SALW-PT-6014X inputs to the PLC. The PLC processes an alarm for pressure in the jumper flush line. The alarm must actuate before the pressure reaches 18 psig. The alarm signal goes to the DTAM and strobe light. The high flush pressure opens the pump motor control interlock circuit after a 3 second delay causing the pump to shutdown.

2.3.1.5 A flow totalizer displays flow rate and total gallons pumped:
A flow head measures the flow in the pump jumper and sends the information to a flow converter inside the Instrument Enclosure. The flow converter sends a 4 to 20mA signal to the PLC. The PLC processes the signal and the flow rate and total gallons are displayed on the DTAM.

2.3.1.6 A flow switch monitors the injection water and shuts down the pump upon low flow.
The flow switch contacts are monitored by the PLC. Contacts open upon low flow and cause a pump shut down. A display on the DTAM indicates whether the flow switch is sensing flow.

2.3.1.7 Pump suction and discharge pressures are displayed:
Signals from transducers are sent to digital display units in the Instrument Enclosure. The discharge pressure signal is also processed by the PLC and displayed on the DTAM.

2.3.1.8 A bearing monitor mechanism is mounted on the canned pump to monitor for bearing wear.
The bearing monitor has a set of contacts monitored by the PLC that open upon the pump bearings reaching a certain wear level. The PLC activates an alarm when the contacts open.

2.3.1.9 A power monitor is installed to monitor pump power.
The power monitor is installed that monitors pump for high and low power. The PLC monitors contacts in the power monitor unit. Upon opening of either the high or low power contacts, the pump will shut down.

2.3.1.10 A RTD is installed on the pump motor to monitor the temperature of the electrical windings.
The RTD resistance is monitored by the PLC. A warning alarm will be activated by the PLC should the motor windings reach 380 degrees F. An alarm and pump shutdown will occur should the motor windings reach 390 degrees F. Reset for both alarms is at 370 degrees F.

2.3.1.11 A thermocouple monitors the injection water to the pump.
The thermocouple is installed into the side of the pump housing that monitors the injection water temperature in the bearing cavity. The temperature reading is shown on the DTAM screen in degrees F.

2.3.1.12 Salt well pumps on different tanks that pump into a common line are interlocked with each other:

Both BY-farm tanks will pump into a common line going the BX-DCRT. The following interlocks will be set up between the skids.

2.3.1.12.1A 30-minute timer starts when any skid is shutdown and has JR-1 ***not*** *in the prime position and. Upon timing out, the other skid will shutdown.*

2.3.1.12.2High jumper flush pressure on any skid starts a 20-minute timer and shuts down the other skid upon timing out.

2.3.1.12.3Skids with JR-1 in flush position; leak detection; and leak detector trouble, or loss of jumper flush signal will cause pump shutdowns after a 3-second delay.

2.3.1.13 Leak detectors connected to the skid are interlocked to cause visual and audible alarms upon leak detection:

Leak detector relays provide discrete inputs to the PLC. Upon detection of a leak or leak detector trouble, alarms and pump shutdown occur after a 3 second delay. For BY-105, the leak detector relays at the pit leak detector station monitor the BY pump pit.

2.3.1.14 There are other conditions that will cause an individual skid to shutdown. These conditions are communications failure with the software, signal loss from the jumper flush transducer, and high temperature on the jet pump motor windings. There are other conditions that will be monitored by both BY-farm skids on a common line causing pump shut downs. These conditions for BY-farm are leaks or detector troubles at the BY-106 skid. These conditions for the skids are tied into the interlock circuit in the PLC ladder logic for the pump permissive.

2.4 TSR REQUIREMENTS

2.4.1 The software program meets the following Technical Safety Requirements. A description of how the program meets the requirements is explained.

LCO 3.1.2: Service Water Pressure Detection System. The jumper flush pressure signal from the transducer is sent to the PLC. Upon the jumper flush line pressure reaching 15psig, an alarm activates and the jet pump shuts down.

LCO 3.1.3: Transfer Leak Detection Systems. The leak detector station for the pump pit is monitored for leaks and/or trouble with the signals being sent to the PLC. The PLC logic activates an alarm and shuts down the jet pump upon receiving leak or trouble signals from the leak detection station. Leak detection signals from the BY-106 skid and the BX-DCRT along the transfer route are sent to the PLC and cause a jet pump shut down.

3.0 SOFTWARE DESCRIPTION

3.1 BY-105 SOFTWARE

The software programs for the PLC and DTAM at BY-105 were written for the new canned pumping system. Software changes made specifically for BY-105 are identified below.

3.1.1 A bump start sequence is used to start the pump under certain conditions.
3.1.2 Injection pump logic is added to shutdown the injection pump under certain conditions.
3.1.3 Logic is added for jet pump shutdown due to power monitor trips, injection flow switch trip, and high motor winding temperature.
3.1.4 A bearing wear monitor alarm is added.
3.1.5 An injection water temperature indication is added.
3.1.6 The dilution system subroutine in the PLC logic is modified to account for the injection water being added to the pumping system.
3.1.7 A new subroutine is added for estimating the amount of injection water added to the pump.
3.1.8 The CGM alarm/interlock and CGM fault alarm/interlock are bypassed. The CGM alarms and interlocks are no longer active.

3.2 PLC INPUTS/OUTPUTS

3.2.1 Outputs:
- 3.2.1.1 Current to Pneumatic (I/P) converter control consisting of a 4 to 20mA signal to control airflow to the DOV.
- 3.2.1.2 Dilution metering pump control consisting of a 4 to 20mA signal.
- 3.2.1.3 Motor starter permissive is 120vac power to the jet pump motor contactor to allow the pump to start.
- 3.2.1.4 A 120vac-output power signal is sent as appropriate to the four indicator lights (red, green, blue and amber) on the instrument panel.
- 3.2.1.5 A 120vac-output power to the pump and jumper heat trace relays.
- 3.2.1.6 An 120vac-output signal to the dilution-metering pump control circuit.
- 3.2.1.7 An 120vac-output signal to the dilution contactor.
- 3.2.1.8 A 120vac output power to the strobe when alarms occur.
- 3.2.1.9 A 120vac-output power to the horn when the jet pump shuts down.

3.2.1.10 A 120vac output power to the injection pump to allow starting and stopping.

3.2.1.11 Output to the DH-485 line as to skid status for JR-1 prime and flush positions, leak detection alarms, skid shutdown, loss of jumper flush signal, and high jumper flush pressure.

3.2.2 Inputs:

3.2.2.1 Combustible gas monitor flammability levels are received on a 4 to 20mA signal representing a 0 to 100 percent range of the lower flammability limit. **NOT USED**

3.2.2.2 Discharge pressure signal of 4 to 20mA from transducer on jumper representing 0 to 300-psig.

3.2.2.3 Specific gravity signal of 4 to 20mA from transmitter in WFIE cabinet representing 0 to 20 inches.

3.2.2.4 Weight factor signal of 4 to 20mA from transmitter in WFIE cabinet representing 0 to 500 inches.

3.2.2.5 Water tank level signal of 4 to 20mA from transmitter in Water cabinet representing 0 to 62 inches.

3.2.2.6 Flow converter signal of 4 to 20mA from transmitter in Instrument cabinet representing 0 to 14gpm.

3.2.2.7 Flush line pressure from transducer (old PS-2) of 4 to 20mA representing 0 to30psig.

3.2.2.8 Discrete input from dilution system. Contact opens on no dilution water flow to provide alarm.

3.2.2.9 Discrete input from Combustible Gas Monitor (CGM) instruments. Two inputs are received. One for flammable gas levels greater than 20% of the LFL and one for CGM trouble. Either will cause an alarm, jet pump shutdown and the deenergizing of the pump and jumper heat trace relays. **NOT USED**

3.2.2.10 Discrete inputs from the leak detection relays. Contacts on the leak detection system open upon leak detection circuit trouble or detection of a leak to cause an alarm and jet pump shutdown.

3.2.2.11 Discrete inputs from transducers LS-1 and LS-2 located on the pump assembly. These transducers monitor the position of the JR-1 three-way valve. The inputs feed into displays, alarms and/or pump permissive inputs.

3.2.2.12 A 4 to 20mA signal from the transfer line pressure transducer. The PLC uses this signal to monitor for low and high pressures on the transfer line.

3.2.2.13 Discrete input MR-1 from the jet pump motor starter. This contact closes when the motor contactor is energized.

3.2.2.14 Discrete input from the power monitor. Contact opens on high or low pump motor power.
3.2.2.15 Discrete input from the bearing monitor. Contact opens upon bearing wear reaching a certain level.
3.2.2.16 Discrete input from the injection water flow switch. Contact opens on low flow.
3.2.2.17 Discrete input from the injection pump control. Contact opens when pump is OFF and closes when pump is ON.
3.2.2.18 Motor winding temperature is received as a 4 to20mA signal from the motor winding RTD via a conversion module.
3.2.2.19 Thermocouple inputs from the PLC enclosure, air compressor enclosure, water cabinet, WFIE cabinet, pump piping assembly, injection water, and pump jumper assembly.
3.2.2.20 Inputs from the DH-485 line as to the status of other BY farm skids when connected and the BX-DCRT along the waste line transfer path. These inputs are used for alarms and jet pump shutdown when appropriate.

3.3 DTAM DISPLAYS, DATA ENTRY AND ALARMS

3.3.1 DTAM DISPLAYS

3.3.1.1 Alarm signals from the PLC.
3.3.1.2 Analog data inputs from the PLC for specific gravity, discharge pressure, jumper flush pressure, weight factor, flow rates, Diaphragm Operated Valve (DOV) parameters, motor winding RTD, and dilution ratio.
3.3.1.3 Temperatures for the Instrument Enclosure, the Air compressor cabinet, WFIE cabinet, Water cabinet, Pump motor windings, pump piping assembly, injection water, and jumper assembly

3.3.2 DTAM DATA ENTRY

3.3.2.1 Signal to turn jumper and pump heat trace ON or OFF.
3.3.2.2 Signal to set pump operation to Manual or Automatic.
3.3.2.3 Alarm acknowledge signal.
3.3.2.4 DOV set point and parameters.
3.3.2.5 Pump ON or OFF input.
3.3.2.6 Jumper temperature setpoint.
3.3.2.7 Injection water flow rate.
3.3.2.8 Pump piping assembly temperature setpoint.
3.3.2.9 Dilution ratio setpoint input.
3.3.2.10 Dilution minimum flow input.

3.3.2.11 Dilution maximum flow input.
3.3.2.12 Injection water flow rate.

3.3.3 DTAM ALARMS

3.3.3.1 Individual alarm screens for each incoming alarm.
3.3.3.2 Screens 101 to 159 for individual alarm acknowledge.

3.4 JET PUMP INTERLOCKS

There are two jet pump interlock strings in the ladder diagram. One string is for equipment along the transfer path that monitors or feed into the transfer route. The other interlock string consists of the local PIC skid conditions. These two interlock strings are identified below for the BY-105 ladder logic. All the interlock conditions must be satisfied for the jet pump to run. If the pump is running and a condition becomes unsatisfied, the pump will shut down.

3.4.1 Interlock string for other equipment along the transfer route:
- 3.4.1.1 Dilution tank no flow
- 3.4.1.2 BY106 skid with JR-1 in flush position
- 3.4.1.3 BY105 pump pit leak detector station alarm
- 3.4.1.4 BY106 skid with leak detector alarm
- 3.4.1.5 The 30 minute time out for an BY106 skid after shutdown and JR-1 not in the prime position
- 3.4.1.6 BX DCRT alarms
- 3.4.1.7 BY106 skid with high jumper flush pressure
- 3.4.1.8 BY106 skid with loss of jumper flush pressure signal

3.4.2 Interlock string monitoring the BY-105 PIC skid conditions:
- 3.4.2.1 Low pressure from the PXPT transducer while pump is running
- 3.4.2.2 High pressure from the PXPT transducer
- 3.4.2.3 High jumper flush pressure
- 3.4.2.4 JR-1 in the flush or prime position
- 3.4.2.5 Pump pit leak or trouble **(NOT USED*, see 3.4.1.3 above.)**
- 3.4.2.6 Data communications failure on the DH-485 link
- 3.4.2.7 Motor winding high temperature
- 3.4.2.8 Jumper flush pressure signal loss
- 3.4.2.9 Leak detector #1 leak or trouble (Not used)*
- 3.4.2.10 Power monitor high or low power
- 3.4.2.11 Injection water low flow
- 3.4.2.12 Other equipment interlock (the above string)

*Leak detectors jumpered at terminal block.

3.5 INTERLOCK and ALARM CONDITIONS

Alarms occur at the PIC skid when the above interlocks are not satisfied. Some alarms are immediate while some are delayed. The alarm conditions are listed below along with the response time for the alarm to occur and whether the jet pump shuts down.

CONDITION	TIME DELAY	PUMP SHUTDOWN
Low transfer pressure	30 seconds	Yes
Communications failure	60 seconds	Yes
BY106 skid shutdown and in JR-1 not in prime position	30 minute, then 3 second delay	Yes
JR-1 in flush # or prime*	None	Yes
Pump shutdown*#	None	---
High transfer pressure	3 seconds	Yes
Jumper flush pressure greater than 15-psig #	3 seconds	Yes
Pump trouble	3 seconds	Yes
Pit leak	3 seconds	(NOT USED)
Pit leak detector trouble	3 seconds	(NOT USED)
BY105 leak or trouble#	3 seconds	Yes
Leak detector 1 (NOT USED)	3 seconds	(NOT USED)
Leak detector 1 trouble (NOT USED)	3 seconds	(NOT USED)
BY106 skid with JR-1 in flush position	3 seconds	Yes
Jumper flush pressure signal loss #	3 seconds	Yes
BY106 skid with leak alarms	3 seconds	Yes
BY106 skid with loss of jumper flush pressure signal	3 seconds	Yes
Injection Flow Switch	2 seconds with 10 min. reset	Yes
Motor winding temperature high	None	Yes
Dilution tank no flow	5 minutes	Yes
BX DCRT alarms	3 seconds	Yes
Power Monitor	None	Yes
High flush press on BY106 skid	20 minutes	Yes
Pump is less than 40 degrees F or the jumper is greater than 225 degrees F	3 seconds	No
Motor Winding High Temperature Warning	None	No
Water tank low level	None	No
Instrument enclosure greater than 130 degrees F	None	No

CONDITION	TIME DELAY	PUMP SHUTDOWN
Bearing Monitor	None	No
Air compressor enclosure greater than 130 degrees F	None	No
Water cabinet less than 35 degrees F	None	No
WFIE cabinet less than 35 degrees F	None	No
Salt well low level	None	No. DOV closes

* If the BY-105 skid "X" shuts down and the JR-1 valve is not in the prime position, a 30-minute timer starts. Upon timing out, any other skids on the same transfer route will shut down.

These alarms will also cause any other skids on the same transfer route to shut down.

3.6 PIC SKID COMMUNICATIONS

The PIC skid at BY-105 communicates with the computer at the BY change trailer over a DH-485 link. The PLC monitors the link to verify the communications network is functional. This communications network ties into the interlock circuit for the jet pump control. An additional tie-in to the communications interlock monitors the PLCs on the network. Every five minutes a bit is sent by each PLC on the network to all PIC skid PLCs. This bit is verified as being received by the PIC skid PLCs every ten minutes. The sending and monitoring of this bit is to ensure that none of the PLCs have gone into a "fault" condition. Should a PLC go to a "fault" condition, the other PIC skid PLCs would not receive a bit from the "faulted" PLC and these skids would then shut down on a communications failure.

PIC skid status information is sent over the link to the BY computer. Skid status information monitored is listed below.

- 3.6.1 JR-1 in prime position
- 3.6.2 JR-1 in flush position
- 3.6.3 PIC skid shut down
- 3.6.4 Leak detected or leak detector trouble in pump pit
- 3.6.5 Skid high flush pressure
- 3.6.6 JFPT signal loss
- 3.6.7 Communications status bit

With the BY-105 PIC skid installed in BY-farm, the above information will affect the BY-106 skid operation. The BY-106 skid will shut down either immediately or after some delay should the BY-105 skid be shut down for conditions 3.6.2, or 3.6.4 through 3.6.7 listed above. Should the BY-105 skid shut down for other reasons and JR-1 is not placed in the prime position within 30 minutes, then the BY-106 skid will shut down. A similar type of condition will exist for the skid at BY-105 which will shutdown upon shut down of the BY-106 skid.

The software is written such if other skids are not connected, no alarm or shut down conditions exist. As explained in the interlock section above, a loss of the DH-485 communications causes jet pump to shut down.

4.0 SOFTWARE PROGRAM DESCRIPTION

This section explains the input and output requirements of the PLC; alarm set points and control system functions. These requirements are used to develop the ladder logic for pump control and alarm actuation. The complete ladder logic is in Appendix B for the PLC and Appendix C for the DTAM program.

4.1 Program locations

The program for the PLC is stored in the CPU located in the PIC skid Instrument Enclosure. The DTAM program is stored in the DTAM unit located on the door of the Instrument Enclosure. The programs for the PLC and DTAM are developed from software on a laptop computer. After the program is written on the laptop, it is downloaded to the PLC and DTAM through an interface link.

Backup copies of the PLC and DTAM programs are stored on 3-1/2" disks. There are two backup copies, one for the design agent and one for file. The backup copies represent the final program in the PLC and DTAM. The PLC file is "BY105NEW" and the DTAM file is "BY105NEW."

4.2 Program layout

4.2.1 The program is written where ladder 2 is the main program. Ladders 3 through 20 are subroutines. The main program uses the subroutines as required during running of the program. The subroutines are listed below as to what function each performs.

4.2.2 Subroutine 3: Program initial conditions are set including initializing the thermocouple module to receive inputs.

4.2.3 Subroutine 4: Inputs to the PLC modules are gathered and placed into an N60:*/* address location. The rest of the program when needing that particular input uses this address.

4.2.4 Subroutine 5: Checks for alarm conditions and has the logic for the main interlock for jet pump control.

4.2.5 Subroutine 6: Contains the logic for the interlock logic for other equipment connected to the transfer route.

4.2.6 Subroutine 7: Contains the logic for the jet pump, injection pump and dilution pump controls to run these pumps. The logic for the total flow calculation to be displayed on the DTAM is this subroutine.

4.2.7 Subroutine 8: This subroutine is the master alarm acknowledge logic.

4.2.8 Subroutine 9: Heat trace control logic

4.2.9 Subroutines 10 and 14: These subroutines are for the DH-485 communications link.

4.2.10 Subroutine 11: This subroutine is only used if the jet and dilution pumps are to be run by control from the BY computer. (This is not used nor was this function tested.)

4.2.11 Subroutine 12: This subroutine handles the inputs for the other equipment status on the transfer route.

4.2.12 Subroutines 13 and 16: Flow meter output routines.

4.2.13 Subroutine 15: This subroutine is the 30-minute time for the other skids in BY-farm when a skid is shut down and in the process position. When the 30-minute timer times out, the skid shuts down unless JR-1 of the shut down skid is placed in the prime position.

4.2.14 Subroutine 17: Individual alarm acknowledge routine.

4.2.15 Subroutine 18: Alarm output to the strobe light, horn and/or instrument panel amber, blue, green or red indicator lights.

4.2.16 Subroutine 19: Sends outputs to the PLC output modules.

4.2.17 Subroutine 20: Sends an output to the dilution metering pump controls.

4.2.18 Subroutine 21: Estimates the volume of injection water in gallons to the new canned pumping system. This routine starts when the injection flow switch closes and uses the manually entered flow rate at the DTAM.

4.3 Inputs and Outputs

Inputs are brought into the PLC through modules 1 through 12. For BY-105 the inputs are assigned addresses N60:*. Appendix A lists the addressing for the inputs to the PLC. Outputs are also assigned an N60:* address and can be found in Appendix A.

4.4 Temperature

The jumper and pump temperatures are to remain between 40 degrees F and 225 degrees F when the heat trace is ON. An alarm actuates for temperatures outside these limits. The pump is monitored for very high temperature and will shut down the jet pump when the very high temperature setpoint is exceeded. The temperature is monitored by the PLC through thermocouple probes at the pump and jumper assemblies.

The temperature of the Instrument Enclosure is not to exceed 130 degrees F. An alarm actuates for temperatures equal to or greater than 130 degrees F. The alarm resets when the temperature drops below 125 degrees F.

The temperature of the Air Compressor Enclosure is not to exceed 130 degrees F. An alarm actuates for temperatures equal to or greater than 130 degrees F. The alarm resets when the temperature drops below 125 degrees F.

The temperature of the WFIE Cabinet is not to decrease below 35 degrees F. An alarm actuates for temperatures less than 35 degrees F. The alarm resets when the temperature rises above 40 degrees F.

The temperature of the Water Cabinet is not to decrease below 35 degrees F. An alarm actuates for temperatures less than 35 degrees F. The alarm resets when the temperature rises above 40 degrees F.

Motor winding temperature is monitored with a RTD. Setpoints are at 380 degrees F for high temperature warning; 390 degrees F for alarm and pump shutdown; and resets at 370 degrees F.

4.5 Alarms

Various inputs to the PLC provide information to determine if an alarm condition exists. Alarm conditions are processed in subroutine 5 in the PLC ladder logic program. Addresses N20:15/*, N20:16/*, N20:55/* and N20:56/* are actuated upon alarm conditions and turn on the strobe light (subroutine 18 of the PLC ladder logic) at the Instrument Enclosure. The horn is turned on when a pump shutdown occurs. Addresses N20:24/*, N20:25/*, N20:51/* and N20:52/* provide alarm input to the DTAM.

Alarms are acknowledged at the DTAM on screen #23. Acknowledging the alarm clears the signal to the strobe and horn only (subroutine 17 of the PLC ladder logic). The visual alarm remains on the DTAM screen until the alarm condition clears in the field. Appendix A lists all the alarm conditions monitored, the addresses and alarm messages. Appendix C is a copy of the DTAM program containing all the alarm screens. Appendix D is a flow diagram of the DTAM screen linkage.

4.6 Pump Control

Subroutine 7 for the new canned pump was totally rewritten. A bump sequence is used to start the pump under certain conditions. There is a interconnection between the canned pump and the injection water pump control. The canned pump is still controlled from the DTAM screen for starting. The PLC logic determines whether the pump will bump or normal start. Document RPP-7567, revision 1 describes in detail the logic of the pump control in subroutines 5 and 7.

4.7 Program Set Points

The set points for BY-105 are identified below along with the PLC logic values.

4.7.1 Jumper flush pressure alarm point: The jumper flush pressure is set to alarm at pressures greater than 15PSI. This is to meet the requirements of LCO 3.1.2 that requires the service water pressure to be less than 20psi. The pressure transducer range is 0 to 30psi, with a 4 to 20mA output signal to the PLC. The internal logic value of the PLC for a 4 to 20mA signal is 3277 to 16384. The PLC logic value for an alarm set point of 15psi is 9830.

4.7.2 Jumper flush pressure signal loss: The input signal from the jumper flush pressure transducers is not fail-safe. Therefore, the 4 to 20mA signal is monitored to a signal loss due to a failed transducer, broken wire or failure of the intrinsic safe module. The PLC logic value is set at 2500. This value is selected because the steady state value of the transducer is below the 3277 when the piping has no liquid inside. The 2500 value will prevent nuance alarms and pump shutdowns.

4.7.3 Water tank level: PIC skid "X" has a 62-inch high water tank. The set points for low water level and reset were calculated to correspond to the relative volume as in the older skids with a 50-inch high tank. The alarm level is set at 12.25 inches and the reset level is set at 15.5 inches. The level transmitter outputs a 4 to 20mA signal to the PLC. The corresponding PLC logic value for 12.25 inches is 5867 and for 15.5 inches is 6554.

4.7.4 Low and High pressure: a pressure transducer monitors the pressure on the pump and jumper-assembly transfer line. A 4 to 20mA signal is sent to the PLC. The PLC program determines a low and a high-pressure alarm point. The low pressure is set at 30psig and the high pressure is set at 140psig. The PLC logic value for 30psig is 4588 and for 140psig is 9394.

4.7.5 Temperature Setpoints: A RTD monitors the motor windings temperature. The PLC is programmed to alarm at 380 degrees F, which is a PLC logic value of 14705. The interlock shutdown setting is at 390 degrees F with a PLC logic value of 15041. The reset for the alarms and interlock is at 370 degrees F with a PLC logic value of 14368.

4.8 BY-Farm Skids

The BY-farm skids installed will interface over the DH-485 data link or hardwire means to the BY-105 skid "X". The types of interfaces are identified below. The PLC logic is an open contact, which is monitored for a closed condition causing a timer to start and/or the skid to shut down.

4.8.1 Skid JR-1 alarm conditions: When the BY-106 skid has JR-1 in the flush position, the BY-105 skid will shut down after 3 second delay upon receiving the signal over the DH-485 link. If the BY-106 skid has JR-1 in the process position and that skid is in the shut down mode, a 30-minute timer starts. Upon timing out of the timer, the BY-105 skid will shut down after a 3-second delay. The 30-minute timer allows operations personnel time to move the JR-1 to the prime position upon skid shut down.

4.8.2 High flush pressures: Upon high flush pressure in the jumper of the BY-106 skid, a 20-minute timer starts. Timing out of the timer will cause the BY-105 skid to shut down. The 20-minute timer allows operations personnel time to perform work on an on-line skid without immediately shutting down the other on-line skid.

4.8.3 Leak detection or leak detector trouble: Leak detection or trouble at the BY-106 skid will cause the BY-105 skid to shut down after a 3 second delay upon receiving the signal over the DH-485 link.

4.8.4 Flush pressure signal losses: The loss of signal to the PLC from the jumper flush pressure transducer on the BY-106 skid, will cause the BY-105 skid to shutdown after a 3-second delay upon receiving the signal over the DH-485 link.

4.9 Software forces

Software forces are installed on output **O:8.3** as a force off. There are no other forces.

APPENDICES

APPENDIX A: PLC AND DTAM ADDRESSING

APPENDIX B: PLC LADDER LOGIC PROGRAM

APPENDIX C: DTAM PROGRAM

APPENDIX D: DTAM SCREEN FLOW DIAGRAM

APPENDIX A

PLC ADDRESSES FOR BY-105

TERMINATION	SIGNAL	TAG	ADDRESS	DESCRIPTION
O:1.0	ANALOG OUTPUT		N60:0	
O:1.1	ANALOG OUTPUT		N60:1	
I:1.0	ANALOG INPUT	CGM	N60:2	CGM ANALOG (PIT) (RESERVED)
I:1.1	ANALOG INPUT	FGM	N60:3	FGM ANALOG (DOME)(RESERVED)
O:2.0	ANALOG OUTPUT	EPC	N60:4	OUTPUT TO DOV
O:2.1	ANALOG OUTPUT	DIL	N60:5	OUTPUT TO METERING PUMP
I:2.0	ANALOG INPUT	PDPT	N60:6	PUMP DISCHARGE PRESSURE
I:2.1	ANALOG INPUT		N60:7	
O:3.0	ANALOG OUTPUT		N60:8	
O:3.1	ANALOG OUTPUT		N60:9	
I:3.0	ANALOG INPUT		N60:10	
I:3.1	ANALOG INPUT		N60:11	
I:4.0	4-20mA	SGT	N60:12	SPECIFIC GRAVITY 0-20 IN. H2O
I:4.1	4-20mA	WFT	N60:13	WEIGHT FACTOR 0-500 IN. H20
I:4.2	4-20mA	LT	N60:14	WATER TANK LEVEL 0-62 INCHES
I:4.3	4-20mA	CNV	N60:15	FLOW METER 0-14GPM
I:5.0	4-20mA	MRTD	N60:16	MOTOR WINDING TEMPERATURE
I:5.1	4-20mA	JFPT	N60:17	JUMPER FLUSH PRESSURE (PS-2)
I:5.2	4-20mA	PXPT	N60:18	TRANSFER PRESSURE (PS-1)
I:5.3			N60:19	
O:6.0	DISCRETE OUTPUT		N60:33/0	
O:6.1	DISCRETE OUTPUT	1A	N60:33/1	INJECTION WATER PUMP
O:6.2	DISCRETE OUTPUT		N60:33/2	
O:6.3	DISCRETE OUTPUT		N60:33/3	
O:6.4	DISCRETE OUTPUT		N60:33/4	
O:6.5	DISCRETE OUTPUT		N60:33/5	
I:6.0	DISCRETE INPUT	X2	N60:33/6	INJECTION PUMP ON
I:6.1	DISCRETE INPUT		N60:33/7	
I:6.2	DISCRETE INPUT		N60:33/8	
I:6.3	DISCRETE INPUT		N60:33/9	
I:6.4	DISCRETE INPUT		N60:33/10	
I:6.5	DISCRETE INPUT		N60:33/11	
I:7.0	T/C		N60:24	
I:7.1	T/C	TE-6003	N60:25	JUMPER TEMPERATURE
I:7.2	T/C	TE-6001	N60:26	AIR COMPR. CABINET TEMPERATURE
I:7.3	T/C	TE-6004	N60:27	INSTRU. CABINET TEMPERATURE

PLC ADDRESSES FOR BY-105

TERMINATION	SIGNAL	TAG	ADDRESS	DESCRIPTION
O:8.0	DISCRETE OUTPUT	INJ-P	N60:28/0	INJECTION WATER PUMP
O:8.1	DISCRETE OUTPUT	DIL-P	N60:28/1	DILUTION SOLENOID
O:8.2	DISCRETE OUTPUT		N60:28/2	
O:8.3	DISCRETE OUTPUT	DIL-C	N60:28/3	DILUTION METERING PUMP
O:8.4	DISCRETE OUTPUT		N60:28/4	
O:8.5	DISCRETE OUTPUT		N60:28/5	
I:8.0	DISCRETE INPUT		N60:28/6	
I:8.1	DISCRETE INPUT	DIL-F	N60:28/7	DILUTION TANK FLOW
I:8.2	DISCRETE INPUT	CGM-AX	N60:28/8	CGM HIGH LFL(RESERVED)
I:8.3	DISCRETE INPUT	FGM	N60:28/9	FGM INTERLOCK(RESERVED)
I:8.4	DISCRETE INPUT	CGM-F	N60:28/10	CGM FAULT(RESERVED)
I:8.5	DISCRETE INPUT	BX-DCRT	N60:28/11	244-BX-DCRT ALARMS
O:9.0	DISCRETE OUTPUT	D05	N60:29/0	PUMP PIPING HEAT TRACE CONTROL
O:9.1	DISCRETE OUTPUT	DO2	N60:29/1	JUMPER HEAT TRACE CONTROL
O:9.2	DISCRETE OUTPUT	D06	N60:29/2	SPARE(PUMP PIPING HEAT TRACE)
O:9.3	DISCRETE OUTPUT	DO3	N60:29/3	JUMPER HEAT TRACE CONTROL
O:9.4	DISCRETE OUTPUT	D07	N60:29/4	SPARE(PUMP PIPING HEAT TRACE)
O:9.5	DISCRETE OUTPUT	D04	N60:29/5	PUMP PIPING HEAT TRACE CONTROL
I:9.0	DISCRETE INPUT	LD3-2	N60:29/6	LEAK DETECTOR #1 TROUBLE (RESERVED)
I:9.1	DISCRETE INPUT	LD1-1	N60:29/7	PIT LEAK DETECTOR (RESERVED)
I:9.2	DISCRETE INPUT		N60:29/8	
I:9.3	DISCRETE INPUT	LD3-1	N60:29/9	PIT LEAK DETECTOR TROUBLE (RESERVED)
I:9.4	DISCRETE INPUT		N60:29/10	
I:9.5	DISCRETE INPUT	LD1-2	N60:29/11	LEAK DETECTOR #1 (RESERVED)
O:10.0	DISCRETE OUTPUT		N60:30/0	
O:10.1	DISCRETE OUTPUT	BUZZ	N60:30/1	OUTPUT TO HORN
O:10.2	DISCRETE OUTPUT		N60:30/2	
O:10.3	DISCRETE OUTPUT	STRB	N60:30/3	OUTPUT TO STROBE LIGHT
O:10.4	DISCRETE OUTPUT		N60:30/4	
O:10.5	DISCRETE OUTPUT		N60:30/5	
I:10.0	DISCRETE INPUT	LS-1	N60:30/6	PROXIMITY LS-1
I:10.1	DISCRETE INPUT	BM-4	N60:30/7	MOTOR BEARING WEAR
I:10.2	DISCRETE INPUT	LS-2	N60:30/8	PROXIMITY LS-2
I:10.3	DISCRETE INPUT		N60:30/9	
I:10.4	DISCRETE INPUT	FWFS-1	N60:30/10	INJECTION WATER FLOW
I:10.5	DISCRETE INPUT		N60:30/11	

PLC ADDRESSES FOR BY-105

TERMINATION	SIGNAL	TAG	ADDRESS	DESCRIPTION
O:11.0	DISCRETE OUTPUT	LGTR	N60:31/0	OUTPUT TO RED LIGHT
O:11.1	DISCRETE OUTPUT	LGTA	N60:31/1	OUTPUT TO AMBER LIGHT
O:11.2	DISCRETE OUTPUT	MS-1	N60:31/2	PUMP MOTOR SWITCH ON
O:11.3	DISCRETE OUTPUT	LGTB	N60:31/3	OUTPUT TO BLUE LIGHT
O:11.4	DISCRETE OUTPUT		N60:31/4	
O:11.5	DISCRETE OUTPUT	LGTG	N60:31/5	OUTPUT TO GREEN LIGHT
I:11.0	DISCRETE INPUT	MR-1	N60:31/6	MOTOR CONTACTOR MONITOR
I:11.1	DISCRETE INPUT		N60:31/7	
I:11.2	DISCRETE INPUT	NC1	N60:31/8	MOTOR POWER MONITOR
I:11.3	DISCRETE INPUT		N60:31/9	
I:11.4	DISCRETE INPUT		N60:31/10	
I:11.5	DISCRETE INPUT		N60:31/11	
I:12.0	T/C	TE-6005	N60:32	WATER CAB TEMP
I:12.1	T/C	TE-6006	N60:33	WFIE TEMP
I:12.2	T/C	TE-6007	N60:34	PUMP PIPING TEMP
I:12.3	T/C	TE-6009	N60:35	FLUSH WATER TEMP

PLC/DTAM ALARM ADDRESSES FOR BY-105

ALARM ADDRESS	ALARM ACK. ADDRESS	ALARM WINDOW MESSAGE	DATA DISPLAY MESSAGE	INPUT/OUTPUT SOURCE	DTAM ACK. ADDRESS	DTAM DIS. SCREEN #	DTAM ALARM SCREEN	ALARM #
N20:24/0	N20:15/0	SPARE	ACKNOWLEDGE STROBE		N12:0/0	48/1	100, 130	ACK.,30
N20:24/1	N20:15/1	XFR PRESSURE LOW	XFR PRESSURE LOW	I:5.2	N12:0/1	41/1	101	1
N20:24/2	N20:15/2	XFR PRESSURE HIGH	XFR PRESSURE HIGH	I:5.2	N12:0/2	41/2	102	2
N20:24/3	N20:15/3	FLUSH PRESSURE HIGH	FLUSH PRESSURE HI	I:5.1	N12:0/3	41/3	103	3
N20:24/4	N20:15/4	PUMP TROUBLE	JET PUMP TROUBLE	I:11.0	N12:0/4	41/4	104	4
N20:24/5	N20:15/5	JR-1 NON-PROCESS	JR-1 POSITION, NON-PROCESS	I:10.0/2	N12:0/5	42/1	105	5
N20:24/6	N20:15/6	PUMP PIT LEAK	PUMP PIT LEAK	I:9.1	N12:0/6	42/2	106	6
N20:24/7	N20:15/7	PUMP PIT TROUBLE	PUMP PIT LEAK TROUBLE	I:9.3	N12:0/7	42/3	107	7
N20:24/8	N20:15/8	PMP/JPR HT TROUBLE	JMPR HEAT TRACE TROUBLE	I:7.1	N12:0/8	42/4	108	8
N20:24/9	N20:15/9	PIC WATER LOW	PIC WATER LEVEL LOW	I:4.2	N12:0/9	43/1	109	9
N20:24/10	N20:15/10	PLC TEMP HIGH	PLC ENCLOSURE HI	I:7.3	N12:0/10	43/2	110	10
N20:24/11	N20:15/11	CMPRSR TEMP HIGH	AIR COMPRESSOR TEMP HI	I:7.2	N12:0/11	43/3	111	11
N20:24/12	N20:15/12	JET PUMP SHUTDOWN	JET PUMP SHUTDOWN	I:11.0	N12:0/12	43/4	112	12
N20:24/13	N20:15/13	SGT LEVEL LOW	SGT LOW	I:4.0	N12:0/13	44/1	113	13
N20:24/14	N20:15/14	MTR TEMP (NORM OR HIGH)	MOTOR WINDING HIGH TEMP SHUTDOWN	I:5.0	N12:0/14		114	14
N20:24/15	N20:15/15	NETWORK FAILURE	PLC COMMUNICATIONS FAILURE	S:9/2	N12:0/15	44/2	115	15
N20:25/0	N20:16/0	JFPT SIGNAL LOST	JFPT SIGNAL LOSS ALARM	I:5.1	N12:1/0	44/3	116	16
N20:25/1	N20:16/1	BY105 LK/TB	BY-105 LEAK OR TROUBLE		N12:1/1	45/1	117	17
N20:25/2	N20:16/2	LEAK DET. 1	LEAK DETECTOR NO 1 LEAK	I:9.5	N12:1/2	45/2	118	18
N20:25/3	N20:16/3	LEAK DET. 1 CK	LEAK DETECTOR NO 1 TROUBLE	I:9.0	N12:1/3	45/3	119	19
N20:25/4	N20:16/4				N12:1/4	45/4	120	20
N20:25/5	N20:16/5	BY106 FLUSH	BY-106 IN FLUSH POSITION	DH-485	N12:1/5	46/1	121	21
N20:25/6	N20:16/6				N12:1/6	46/2	122	22
N20:25/7	N20:16/7	BX DCRT ALARMS	244-BX-DCRT ALARMS	I:8.5	N12:1/7	46/3	123	23
N20:25/8	N20:16/8				N12:1/8	46/4	124	24
N20:25/9	N20:16/9				N12:1/9	50/2	125	25
N20:25/10	N20:16/10				N12:1/10	48/1	126	26
N20:25/11	N20:16/11				N12:1/11	48/2	127	27
N20:25/12	N20:16/12				N12:1/12	48/3	128	28
N20:25/13	N20:16/13				N12:1/13	50/1	129	29
N20:25/14	N20:16/14				N12:1/14	50/2	131	31
N20:25/15	N20:16/15				N12:1/15	50/3	132	32
N20:51/0	N20:55/0	BY106 LK/TB	BY-106 LEAK OR TROUBLE	DH-485	N12:2/0	52/1	133	33
N20:51/1	N20:55/1				N12:2/1	52/2	134	34
N20:51/2	N20:55/2				N12:2/2	52/3	135	35
N20:51/3	N20:55/3	DILUTIN TK ALARM	DILUTION TANK NO FLOW	I:8.1	N12:2/3	52/4	136	36
N20:51/4	N20:55/4				N12:2/4	53/1	137	37
N20:51/5	N20:55/5				N12:2/5	53/2	138	38
N20:51/6	N20:55/6	INJECTIN WTR	PUMP INJECTION WATER LOW FLOW	I:10.4	N12:2/6	53/3	139	39
N20:51/7	N20:55/7	POWER MONITOR	POWER MONITOR HI/LO SHUTDOWN	I:11.2	N12:2/7	53/4	140	40
N20:51/8	N20:55/8				N12:2/8	54/1	141	41
N20:51/9	N20:55/9				N12:2/9	54/2	142	42
N20:51/10	N20:55/10				N12:2/10	54/3	143	43

PLC/DTAM ALARM ADDRESSES FOR BY-105

ALARM	ALARM ACK.	ALARM WINDOW MESSAGE	DATA DISPLAY MESSAGE	INPUT/OUTPUT	DTAM ACK.	DTAM DIS.	DTAM ALARM	ALARM #
N20:51/11	N20:55/11				N12:2/11	54/4	144	44
N20:51/12	N20:55/12	BY-106 JF SIG LOSS	BY-106 JUMPER FLUSH SIGNAL LOSS	DH-485	N12:2/12	55/1	145	45
N20:51/13	N20:55/13				N12:2/13	55/2	146	46
N20:51/14	N20:55/14				N12:2/14	55/3	147	47
N20:51/15	N20:55/15				N12:2/15	55/4	148	48
N20:52/0	N20:56/0	WTR CAB TEMP LOW	WATER CAB TEMP LOW	I:12.0	N12:3/0	56/1	149	49
N20:52/1	N20:56/1	WFIE TEMP LOW	WFIE TEMP LOW	I:12.1	N12:3/1	56/2	150	50
N20:52/2	N20:56/2				N12:3/2	56/3	151	51
N20:52/3	N20:56/3				N12:3/3	56/4	152	52
N20:52/4	N20:56/4				N12:3/4	57/1	153	53
N20:52/5	N20:56/5	BY106 FL PR	BY-106 HIGH FLUSH PRESSURE	DH-485	N12:3/5	57/2	154	54
N20:52/6	N20:56/6				N12:3/6	57/3	155	55
N20:52/7	N20:56/7				N12:3/7	57/4	156	56
N20:52/8	N20:56/8	BY106 SHTDN	BY-106 SHUTDOWN TIMER ACTIVATED	DH-485	N12:3/8	58/1	157	57
N20:52/9	N20:56/9	PMP BEARING	PUMP WORN BEARING ALERT	I:10.1	N12:3/9	58/2	158	58
N20:52/10	N20:56/10	MTR WNDG TMP	MOTOR WINDING HI TEMP WARNING	I:5.0	N12:3/10	58/3	159	59
N20:52/11	N20:56/11				N12:3/11			
N20:52/12	N20:56/12				N12:3/12			
N20:52/13	N20:56/13				N12:3/13			
N20:52/14	N20:56/14				N12:3/14			
N20:52/15	N20:56/15				N12:3/15			

BY-FARM NODE ADDRESSES

NODE #	LOCATION
0	
1	
2	
3	EMERG SKID
4	BY FARM OCS
5	BY-105
6	BY-106
7	
8	
9	
10	
11	
12	
13	

BY-105 ADDRESSES

CONTROL ADD.	CONTROL ADD.	DESCRIPTION	DTAM SCREEN/POSITION
	N20:17/0	MOTOR PERMISSIVE	
	N20:17/1	SUB INTERLOCK	
	N20:17/2	INTERLOCK	
	N20:17/3	SUB INTERLOCK	
	N20:17/4	HEATER ON	31/1 AND 2
	N20:17/5	CLEAR COUNTER	
	N20:17/6	AUTO/MANUAL	13/1, 15/1 AND 2, 22/1
	N20:17/7	SIMULATE	
	N20:17/8	SEND MESSAGE	
	N20:17/9		
	N20:17/10	MASTER ACKNOWLEDGE	23/1
	N20:17/11	TRANSMIT TROUBLE	
	N20:17/12	RETRY MESSAGE	
	N20:17/13		
	N20:17/14	RESET COUNTER	
	N20:17/15		
N10:2	N20:18	PID SET POINT	14/3 AND 4
N10:3	N20:19	PID GAIN	18/2 AND 3
N10:4	N20:20	PID RESET	19/2 AND 3
N10:5	N20:21	PID RATE	21/2 AND 3
N10:28	N20:22	PROCESS VARIABLE	
N10:29	N20:23	PID OUTPUT	13/3, 14/1, 18/1, 19/1, 21/1, 22/2 AND 3
N10:13	N20:26	LOOP UPDATE	
S:9	N20:27	STATION ON DH485	
N15:0	N20:28		
N15:5	N20:29		
C5:1,ACC	N20:30	TOTAL 1	26/4, 27/5
C5:2,ACC	N20:31	TOTAL 2	26/3, 27/6
	N20:32/0	SKID PRIME	
	N20:32/1	SKID FLUSH	
	N20:32/2	SKID SHUTDOWN	
	N20:32/3	SKID PIT LEAK	
	N20:32/4	SKID LEAK #1(RESERVED)	
	N20:32/5	SKID HI PRESS FLUSH	
	N20:32/6		
	N20:32/7		
	N20:32/8	JFPT SIGNAL LOSS	
	N20:32/9		
	N20:32/10		
	N20:32/11		
	N20:32/12		
	N20:32/13		
	N20:32/14		
	N20:32/15	ACTIVE COMMUNICATIONS BIT	

BY-105 ADDRESSES

CONTROL ADD.	CONTROL ADD.	DESCRIPTION	DTAM SCREEN/POSITION
NODE#1	N20:33/0	SPARE	
	N20:33/1		
	N20:33/2		
	N20:33/3		
	N20:33/4		
	N20:33/5		
	N20:33/6		
	N20:33/7		
	N20:33/8		
	N20:33/9		
	N20:33/10		
	N20:33/11		
	N20:33/12		
	N20:33/13		
	N20:33/14		
	N20:33/15		
NODE#2	N20:34/0		
	N20:34/1		
	N20:34/2		
	N20:34/3		
	N20:34/4		
	N20:34/5		
	N20:34/6		
	N20:34/7		
	N20:34/8		
	N20:34/9		
	N20:34/10		
	N20:34/11		
	N20:34/12		
	N20:34/13		
	N20:34/14		
	N20:34/15		
NODE#3	N20:35/0	EMERG PRIME	
	N20:35/1	EMERG FLUSH	
	N20:35/2	EMERG SHUTDOWN	
	N20:35/3	EMERG PIT LEAK	
	N20:35/4	EMERG LEAK 1	
	N20:35/5	EMERG HI PRESS FLUSH	
	N20:35/6		
	N20:35/7		
	N20:35/8	EMERG JFPT SIGNAL LOSS	
	N20:35/9		
	N20:35/10		
	N20:35/11		
	N20:35/12		

BY-105 ADDRESSES

CONTROL ADD.	CONTROL ADD.	DESCRIPTION	DTAM SCREEN/POSITION
	N20:35/13		
	N20:35/14		
	N20:35/15		
		BY OCS	
NODE#4	N20:36/0		
	N20:36/1		
	N20:36/2		
	N20:36/3		
	N20:36/4		
	N20:36/5		
	N20:36/6		
	N20:36/7		
	N20:36/8		
	N20:36/9		
	N20:36/10		
	N20:36/11		
	N20:36/12		
	N20:36/13		
	N20:36/14		
	N20:36/15		
NODE#5	N20:37/0	BY-105 PRIME	
	N20:37/1	BY-105 FLUSH	
	N20:37/2	BY-105 SHUTDOWN	
	N20:37/3	BY-105 PIT LEAK	
	N20:37/4	BY-105 LEAK 1(RESERVED)	
	N20:37/5	BY-105 HI PRESS FLUSH	
	N20:37/6		
	N20:37/7		
	N20:37/8	BY-105 JFPT SIGNAL LOSS	
	N20:37/9		
	N20:37/10		
	N20:37/11		
	N20:37/12		
	N20:37/13		
	N20:37/14		
	N20:37/15	ACTIVE COMMUNICATIONS BIT	
NODE#6	N20:38/0	BY-106 PRIME	
	N20:38/1	BY-106 FLUSH	
	N20:38/2	BY-106 SHUTDOWN	
	N20:38/3	BY-106 PIT LEAK	
	N20:38/4	BY-106 LEAK 1(RESERVED)	
	N20:38/5	BY-106 HI PRESS FLUSH	
	N20:38/6	BY-105 LK/TRB	
	N20:38/7		
	N20:38/8	BY-106 JFPT SIGNAL LOSS	
	N20:38/9		

BY-105 ADDRESSES

CONTROL ADD.	CONTROL ADD.	DESCRIPTION	DTAM SCREEN/POSITION
	N20:38/10		
	N20:38/11		
	N20:38/12		
	N20:38/13		
	N20:38/14		
	N20:38/15	ACTIVE COMMUNICATIONS BIT	
NODE#7	N20:39/0		
	N20:39/1		
	N20:39/2		
	N20:39/3		
	N20:39/4		
	N20:39/5		
	N20:39/6		
	N20:39/7		
	N20:39/8		
	N20:39/9		
	N20:39/10		
	N20:39/11		
	N20:39/12		
	N20:39/13		
	N20:39/14		
	N20:39/15		

Processor Information

Processor Type: 1747-L532E 5/03 CPU - 16K Mem. OS302 Series C

Processor Name: BY105SKU

Total Memory Used: 2372 Instruction Words Used - 1358 Data Table Words Used

Total Memory Left: 9916 Instruction Words Left

Program Files: 22

Data Files: 111

Program ID: 45d0

I/O Configuration

0	1747-L532E	5/03 CPU - 16K Mem. OS302 Series C
1	1746-NIO4I	Analog 2 Ch In/2 Ch Current Out
2	1746-NIO4I	Analog 2 Ch In/2 Ch Current Out
3	1746-NIO4I	Analog 2 Ch In/2 Ch Current Out
4	1746-NI4	Analog 4 Channel Input Module
5	1746-NI4	Analog 4 Channel Input Module
6	1746-IO12	6-Input 100/120 VAC, 6-Output (RLY)
7	1746-NT4	Analog 4 Ch Thermocouple Input
8	1746-IO12	6-Input 100/120 VAC, 6-Output (RLY)
9	1746-IO12	6-Input 100/120 VAC, 6-Output (RLY)
10	1746-IO12	6-Input 100/120 VAC, 6-Output (RLY)
11	1746-IO12	6-Input 100/120 VAC, 6-Output (RLY)
12	1746-NT4	Analog 4 Ch Thermocouple Input

Channel Configuration

GENERAL
Channel 1 Write Protected: No
Channel 1 Edit Resource/Owner Timeout: 60
Channel 1 Passthru Link ID: 4

Channel 0 Write Protected: No
Channel 0 Edit Resource/Owner Timeout: 60
Channel 0 Passthru Link ID: 4
Channel 0 Current Mode: System
Channel 0 Mode Change Enabled: No
Channel 0 Mode Change Attention Character: \1b
Channel 0 Mode Change System Character: S
Channel 0 Mode Change User Character: U

CHANNEL 1 (SYSTEM) - Driver: DH485
Node : 5 (decimal)
Baud: 19200
Token Hold Factor: 1
Max Node Address: 31

CHANNEL 0 (SYSTEM) - Driver: DH485
Node : 1 (decimal)
Baud: 19200
Token Hold Factor: 1
Max Node Address: 31

CHANNEL 0 (USER) - Driver: ASCII
Baud: 19200
Parity: NONE
Stop Bits: 1
Data Bits: 8
Control Line : No Handshaking
Delete mode: Ignore
Echo: No
XON/XOFF: No
Termination Character 1: \d
Termination Character 2: \ff
Append Character 1: \d
Append Character 2: \a

LAD 2 - --- Total Rungs in File = 19

0000

N20:17 7 — N16:6 OSR 8 — COP
Copy File
Source #N14:0
Dest #N60:4
Length 15

0001

First Pass S:1 15 — JSR
Jump To Subroutine
SBR File Number U:3

GATHER INPUTS FROM ALL 12 MODULES

0002

N20:17 7 — JSR
Jump To Subroutine
SBR File Number U:4

CHECKS FOR ALARM CONDITIONS AND SENDS SIGNAL TO DTAM, STROBE, LIGHTS, HORN. MOTOR INTERLOCK CIRCUIT

0003

JSR
Jump To Subroutine
SBR File Number U:5

INTERLOCK TO OTHER BY-FARM TANKS

0004

JSR
Jump To Subroutine
SBR File Number U:6

PID CONTROL AND COUNT FLOW

0005

JSR
Jump To Subroutine
SBR File Number U:7

MASTER ACKNOWLEDGE

0006

JSR
Jump To Subroutine
SBR File Number U:8

HEAT TRACE CONTROL

0007 — JSR
Jump To Subroutine
SBR File Number U:9

DH-485 INPUTS/OUTPUTS

0008 — JSR
Jump To Subroutine
SBR File Number U:12

MR-1 MONITOR POWER ON JET PUMP MOTOR STARTER - 1 SEC. DELAY

0009 — MR-1 CONTACT N60:31 / 6 — TON
Timer On Delay
Timer T4:33
Time Base 0.01
Preset 100<
Accum 0<
EN
DN

FLOWMETER ROUTINE WHEN OUTPUT GREATER THAN 4mA

0010 — 1 SEC DELAY T4:33 / DN — GRT
Greater Than (A>B)
Source A N60:15
9823<
Source B 3277
3277<
— JSR
Jump To Subroutine
SBR File Number U:13
— T4:33 RES

NETWORK INTERLOCK

0011 — JSR
Jump To Subroutine
SBR File Number U:15

ALARM ACKNOWLEDGE

0012 — JSR
Jump To Subroutine
SBR File Number U:17

OUTPUT TO STROBE AND LIGHTS

0013 — JSR Jump To Subroutine SBR File Number U:18

DILUTION SYSTEM ROUTINE

0014 — JSR Jump To Subroutine SBR File Number U:20

SEND OUTPUTS

0015 — N20:17 7 — JSR Jump To Subroutine SBR File Number U:19

INJECTION WATER TOTAL FLOW COUNTER

0016 — JSR Jump To Subroutine SBR File Number U:21

RESET TOTALIZER (FLOW METER)

0017 — N20:17 5 — CLR Clear Dest C5:1.ACC 925< ; CLR Clear Dest C5:2.ACC 1<

0018 — END

LAD 3 - --- Total Rungs in File = 21

INITIALIZE THERMOCOUPLE MODULES IN SLOTS 7 AND 12 TO READ IN DEGREES F

0000
SBR
Subroutine
COP
Copy File
Source #N9:0
Dest #O:7.0
Length 4
COP
Copy File
Source #N9:0
Dest #O:12.0
Length 4

0001
MOV
Move
Source 0
0<
Dest N13:0
0<

0002
NOT
NOT
Source N13:0
0<
Dest N13:1
-1<

0003
MOV
Move
Source 64
64<
Dest N15:8
64<

0004
MOV
Move
Source 2
2<
Dest N15:7
2<

0005
B3:7
U
6

0006
BUMP OR NORMAL START RELAY
N20:14
U
0

0007
BUMP UNLATCH RELAY
N20:14
U
4

0008
COUNTER RESET
C5:3
RES

LAD 3 - --- Total Rungs in File = 21

0009

MVM
Masked Move
Source N13:0
0<
Mask 0002h
2<
Dest N20:14
-30720<

SKID X, BY-105, NODE 5

0010

MOV
Move
Source 5
5<
Dest N7:50
5<

Node
Address/
Baud Rate

MVM
Masked Move
Source N7:50
5<
Mask 00FFh
255<
Dest S:15
1029<

0011

JSR
Jump To Subroutine
SBR File Number U:10

0012

MOV
Move
Source -32768
-32768<
Dest N20:32
-32763<

MOV
Move
Source N13:1
-1<
Dest N40:15
-32763<

0013

N20:35
U
15

N20:38
U
15

0014

CLR
Clear
Dest N15:2
64<

LAD 3 - --- Total Rungs in File = 21

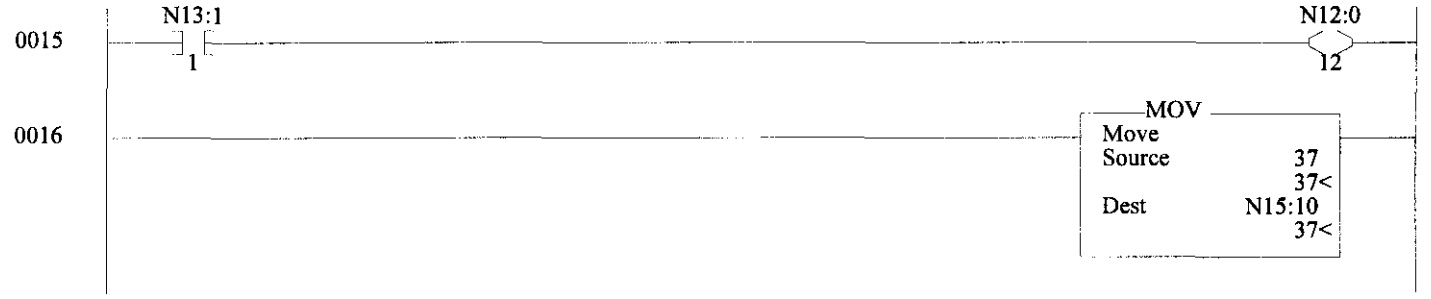

0017

MOV
Move
Source N15:10
37<
Dest N7:5
37<

MOV
Move
Source N15:10
37<
Dest N7:25
37<

MOV
Move
Source N15:10
37<
Dest N7:45
37<

MOV
Move
Source N15:10
37<
Dest N7:65
37<

MOV
Move
Source N15:10
37<
Dest N7:85
37<

MOV
Move
Source N15:10
37<
Dest N7:105
37<

MOV
Move
Source N15:10
37<
Dest N7:125
37<

MOV
Move
Source N15:10
37<
Dest N7:145
37<

LAD 3 - --- Total Rungs in File = 21

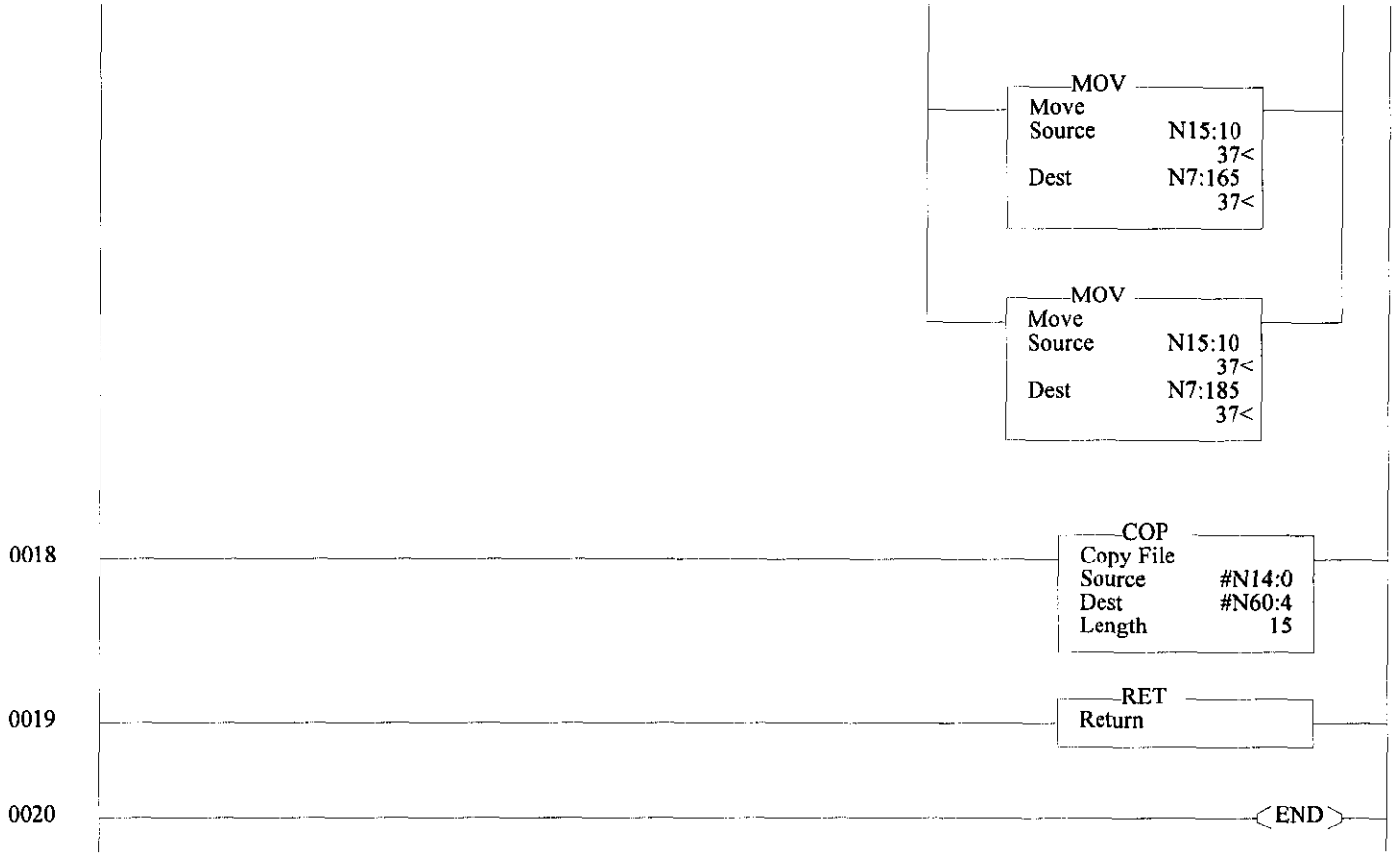

LAD 4 - --- Total Rungs in File = 11

GET INPUTS FROM MODULES 1, 2 AND 3

0000

SBR
Subroutine

COP
Copy File
Source #I:1.0
Dest #N60:2
Length 2

COP
Copy File
Source #I:2.0
Dest #N60:6
Length 2

COP
Copy File
Source #I:3.0
Dest #N60:10
Length 2

GET INPUTS FROM MODULES 4 AND 5

0001

COP
Copy File
Source #I:4.0
Dest #N60:12
Length 4

COP
Copy File
Source #I:5.0
Dest #N60:16
Length 4

GET INPUTS FROM MODULE 6

0002

MVM
Masked Move
Source I:6.0
4608<
Mask 003Fh
63<
Dest N17:8
0<

MUL
Multiply
Source A N17:8
0<
Source B 64
64<
Dest N17:9
0<

MVM
Masked Move
Source N17:9
0<
Mask 0FC0h
4032<
Dest N60:20
2<

GET TEMPERATURE INPUTS FROM MODULE 7

0003

COP
Copy File
Source #I:7.0
Dest #N60:24
Length 4

GET INPUTS FROM MODULE 8

0004

MVM
Masked Move
Source I:8.0
-480<
Mask 003Fh
63<
Dest N17:0
32<

MUL
Multiply
Source A N17:0
32<
Source B 64
64<
Dest N17:1
2048<

MVM
Masked Move
Source N17:1
2048<
Mask 0FC0h
4032<
Dest N60:28
2048<

GET INPUTS FROM MODULE 9

0005

MVM
Masked Move
Source I:9.0
-469<
Mask 003Fh
63<
Dest N17:2
43<

MUL
Multiply
Source A N17:2
43<
Source B 64
64<
Dest N17:3
2752<

MVM
Masked Move
Source N17:3
2752<
Mask 0FC0h
4032<
Dest N60:29
2752<

GET INPUTS FROM MODULE 10

0006

MVM
Masked Move
Source I:10.0
-505<
Mask 003Fh
63<
Dest N17:4
7<

MUL
Multiply
Source A N17:4
7<
Source B 64
64<
Dest N17:5
448<

MVM
Masked Move
Source N17:5
448<
Mask 0FC0h
4032<
Dest N60:30
1480<

GET INPUTS FROM MODULE 11

0007

MVM
Masked Move
Source #I:11.0
-512<
Mask 003Fh
63<
Dest N17:6
0<

MUL
Multiply
Source A N17:6
0<
Source B 64
64<
Dest N17:7
0<

MVM
Masked Move
Source N17:7
0<
Mask 0FC0h
4032<
Dest N60:31
290<

LAD 4 - --- Total Rungs in File = 11

GET TEMPERATURES FROM MODULE 12

0008 — COP
Copy File
Source #I:12.0
Dest #N60:32
Length 4

0009 — RET
Return

0010 — END

TRANSFER LOW PRESSURE WHEN PUMP ON STARTS TIMER AT 30 PSIG

0000

MR-1 CONTACT
N60:31
6

CHECK IF PXPT IS
LESS THAN 30PSIG
LES
Less Than (A<B)
Source A N60:18
3312<
Source B 4588
4588<

TON
Timer On Delay
Timer T4:1
Time Base 1.0
Preset 30<
Accum 0<
EN
DN

0001

30 SEC DELAY
T4:1
DN

XFER PRESS LOW INTLK
N20:24
1

N16:0
OSR
1

ALARM 1
N20:15
L
1

TRANSFER HIGH PRESSURE STARTS TIMER AT 140PSIG

0002

CHECK IF PXPT IS GRT
THAN 140PSIG
GRT
Greater Than (A>B)
Source A N60:18
3312<
Source B 9394
9394<

TON
Timer On Delay
Timer T4:2
Time Base 1.0
Preset 3<
Accum 0<
EN
DN

0003

3 SEC DELAY
T4:2
DN

XFER PRESS HIGH
INTLK
N20:24
2

N16:0
OSR
2

ALARM 2
N20:15
L
2

JFPT (PS-2), HIGH PRESS FLUSH, GREATER THAN 15PSIG STARTS TIMER

0004

CHECK IF JFPT IS GRT
THAN 15PSIG
GRT
Greater Than (A>B)
Source A N60:17
4134<
Source B 9830
9830<

TON
Timer On Delay
Timer T4:3
Time Base 1.0
Preset 3<
Accum 0<
EN
DN

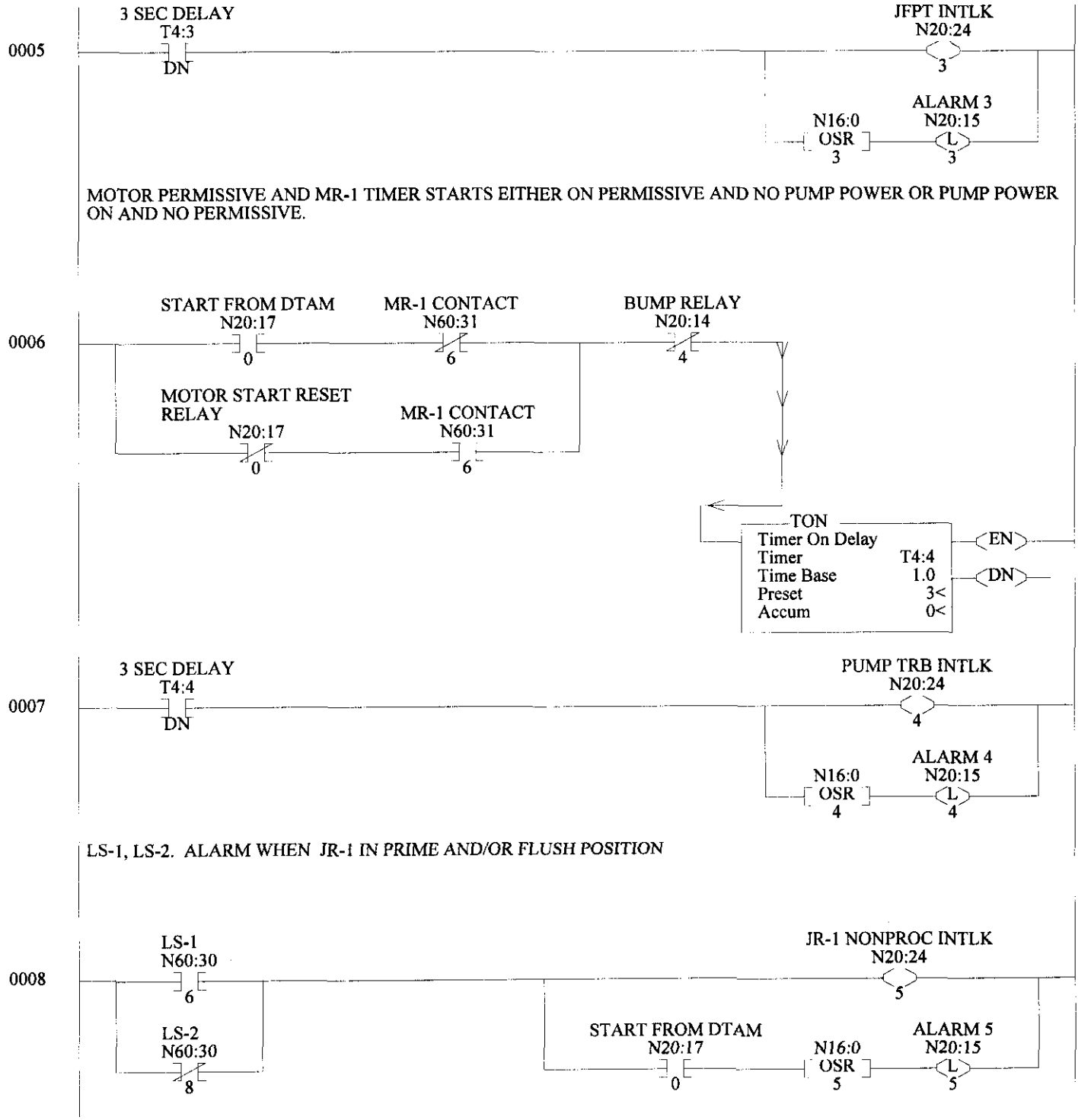
0005
3 SEC DELAY
T4:3
DN
JFPT INTLK
N20:24
3
N16:0
OSR
3
ALARM 3
N20:15
L
3
MOTOR PERMISSIVE AND MR-1 TIMER STARTS EITHER ON PERMISSIVE AND NO PUMP POWER OR PUMP POWER ON AND NO PERMISSIVE.
0006
START FROM DTAM
N20:17
0
MR-1 CONTACT
N60:31
6
BUMP RELAY
N20:14
4
MOTOR START RESET RELAY
N20:17
0
MR-1 CONTACT
N60:31
6
TON
Timer On Delay
Timer T4:4
Time Base 1.0
Preset 3<
Accum 0<
EN
DN
0007
3 SEC DELAY
T4:4
DN
PUMP TRB INTLK
N20:24
4
N16:0
OSR
4
ALARM 4
N20:15
L
4
LS-1, LS-2. ALARM WHEN JR-1 IN PRIME AND/OR FLUSH POSITION
0008
LS-1
N60:30
6
LS-2
N60:30
8
JR-1 NONPROC INTLK
N20:24
5
START FROM DTAM
N20:17
0
N16:0
OSR
5
ALARM 5
N20:15
L
5

PIT LEAK DETECTOR LEAK SIGNAL

0009 PIT LEAK N60:29 7 — TON Timer On Delay, Timer T4:6, Time Base 1.0, Preset 3<, Accum 0< — EN, DN

0010 3 SEC DELAY T4:6 DN — PIT LEAK INTLK N20:24 6; N16:0 OSR 6 — ALARM 6 N20:15 L 6

PIT LEAK DETECTOR TROUBLE SIGNAL

0011 DETECTOR TROUBLE N60:29 9, PIT LEAK N60:29 7 — TON Timer On Delay, Timer T4:7, Time Base 1.0, Preset 3<, Accum 0< — EN, DN

0012 3 SEC DELAY T4:7 DN — PIT LD TRB INTLK N20:24 7; N16:0 OSR 7 — ALARM 7 N20:15 L 7

LAD 5 - --- Total Rungs in File = 76

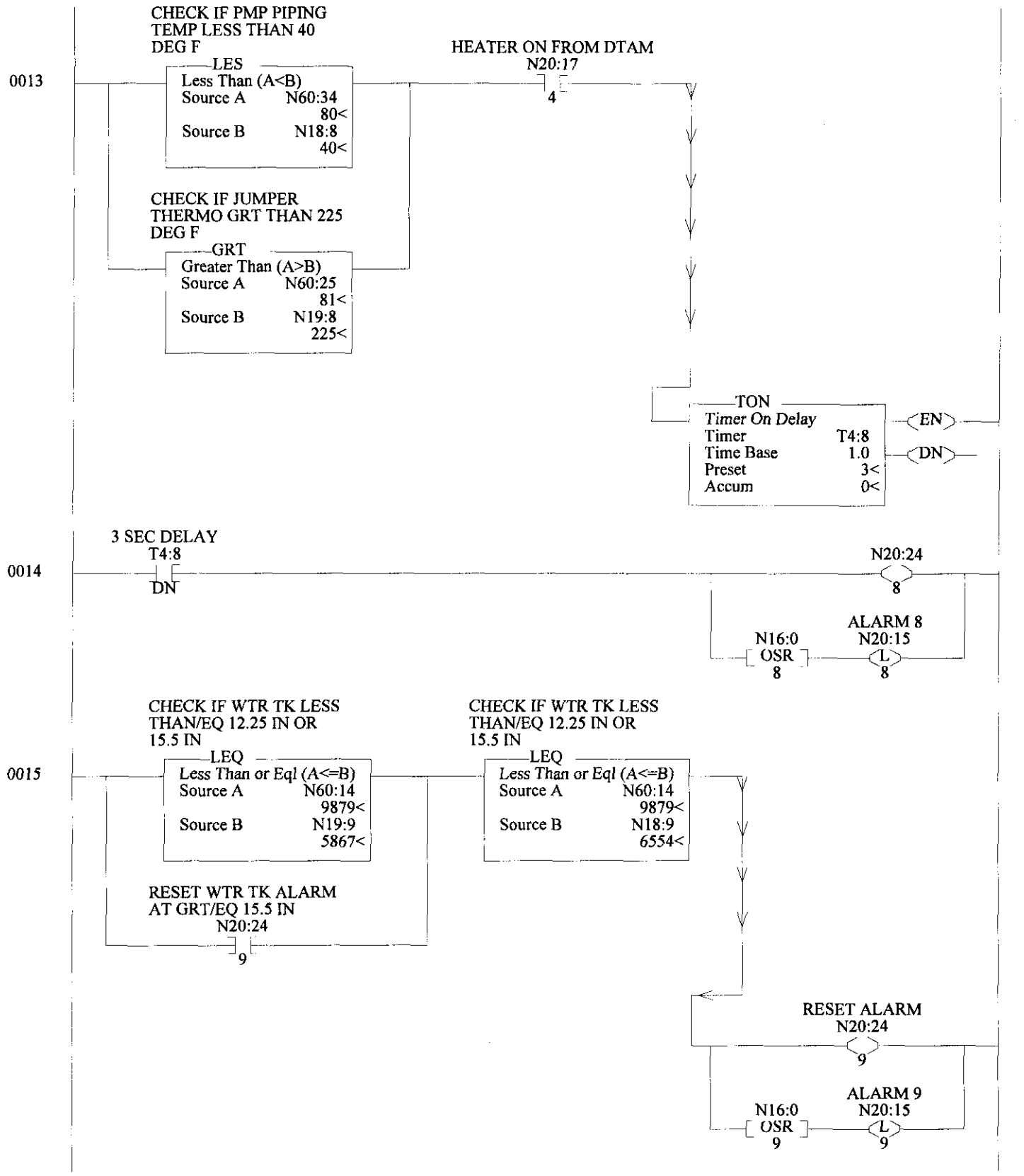

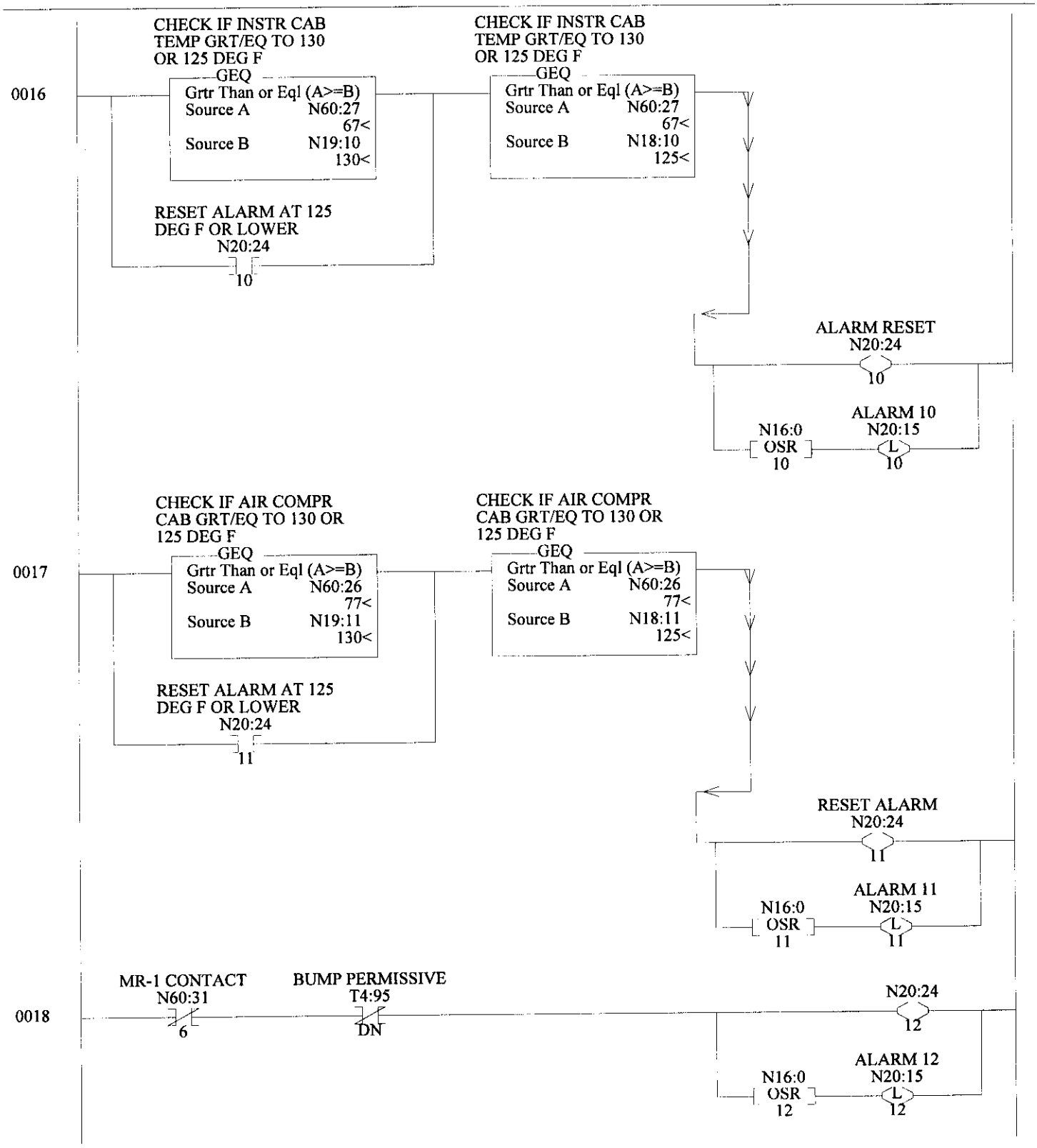
0016
CHECK IF INSTR CAB TEMP GRT/EQ TO 130 OR 125 DEG F
GEQ
Grtr Than or Eql (A>=B)
Source A N60:27 67<
Source B N19:10 130<
CHECK IF INSTR CAB TEMP GRT/EQ TO 130 OR 125 DEG F
GEQ
Grtr Than or Eql (A>=B)
Source A N60:27 67<
Source B N18:10 125<
RESET ALARM AT 125 DEG F OR LOWER
N20:24
10
ALARM RESET
N20:24
10
N16:0
OSR
10
ALARM 10
N20:15
L
10
0017
CHECK IF AIR COMPR CAB GRT/EQ TO 130 OR 125 DEG F
GEQ
Grtr Than or Eql (A>=B)
Source A N60:26 77<
Source B N19:11 130<
CHECK IF AIR COMPR CAB GRT/EQ TO 130 OR 125 DEG F
GEQ
Grtr Than or Eql (A>=B)
Source A N60:26 77<
Source B N18:11 125<
RESET ALARM AT 125 DEG F OR LOWER
N20:24
11
RESET ALARM
N20:24
11
N16:0
OSR
11
ALARM 11
N20:15
L
11
0018
MR-1 CONTACT
N60:31
6
BUMP PERMISSIVE
T4:95
DN
N20:24
12
N16:0
OSR
12
ALARM 12
N20:15
L
12

LAD 5 - --- Total Rungs in File = 76

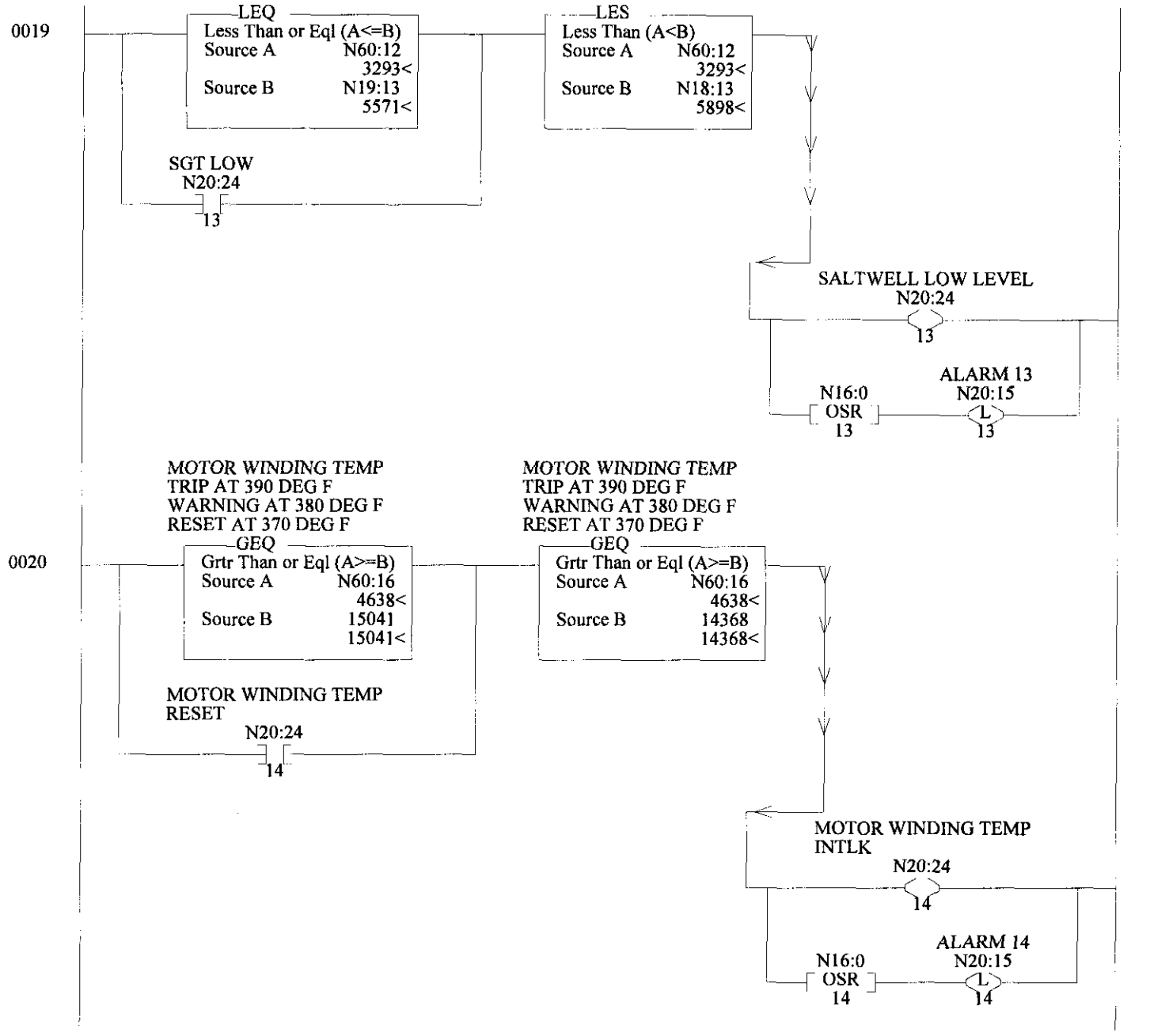

LAD 5 - --- Total Rungs in File = 76

0021

MOTOR WINDING TEMP
TRIP AT 390 DEG F
WARNING AT 380 DEG F
RESET AT 370 DEG F

GEQ
Grtr Than or Eql (A>=B)
Source A N60:16
4638<
Source B 14705
14705<

MOTOR WINDING TEMP
TRIP AT 390 DEG F
WARNING AT 380 DEG F
RESET AT 370 DEG F

GEQ
Grtr Than or Eql (A>=B)
Source A N60:16
4638<
Source B 14368
14368<

MTR WINDING TEMP
RESET
N20:52
10

N20:52
10

N16:10
OSR
15

ALARM 59
N20:56
L
10

STATION ON DH-485 PRESENT

0022

AND
Bitwise AND
Source A S:9
0060h<
Source B N15:5
0040h<
Dest N15:2
0040h<

STATION ON DH-485 PREVIOUS

0023

MVM
Masked Move
Source N15:0
64<
Mask N15:5
0040h<
Dest N15:3
64<

COMPARE PRESENT AND PREVIOUS DH-485 AND ALARM IS NOT EQUAL

0024

NEQ
Not Equal
Source A N15:2
64<
Source B N15:3
64<

TON
Timer On Delay
Timer T4:15
Time Base 1.0
Preset 60<
Accum 0<

EN
DN

LAD 5 - --- Total Rungs in File = 76

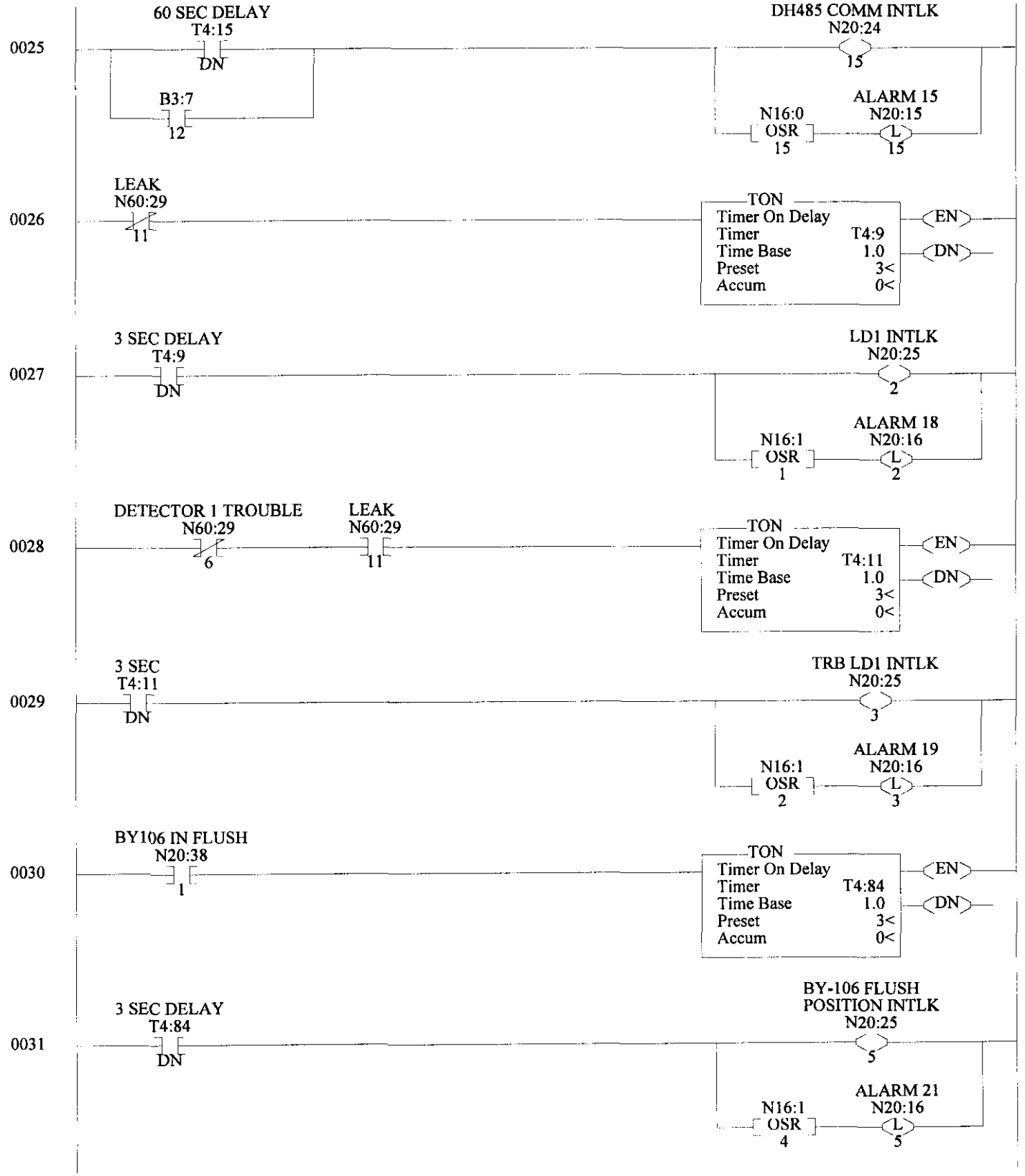

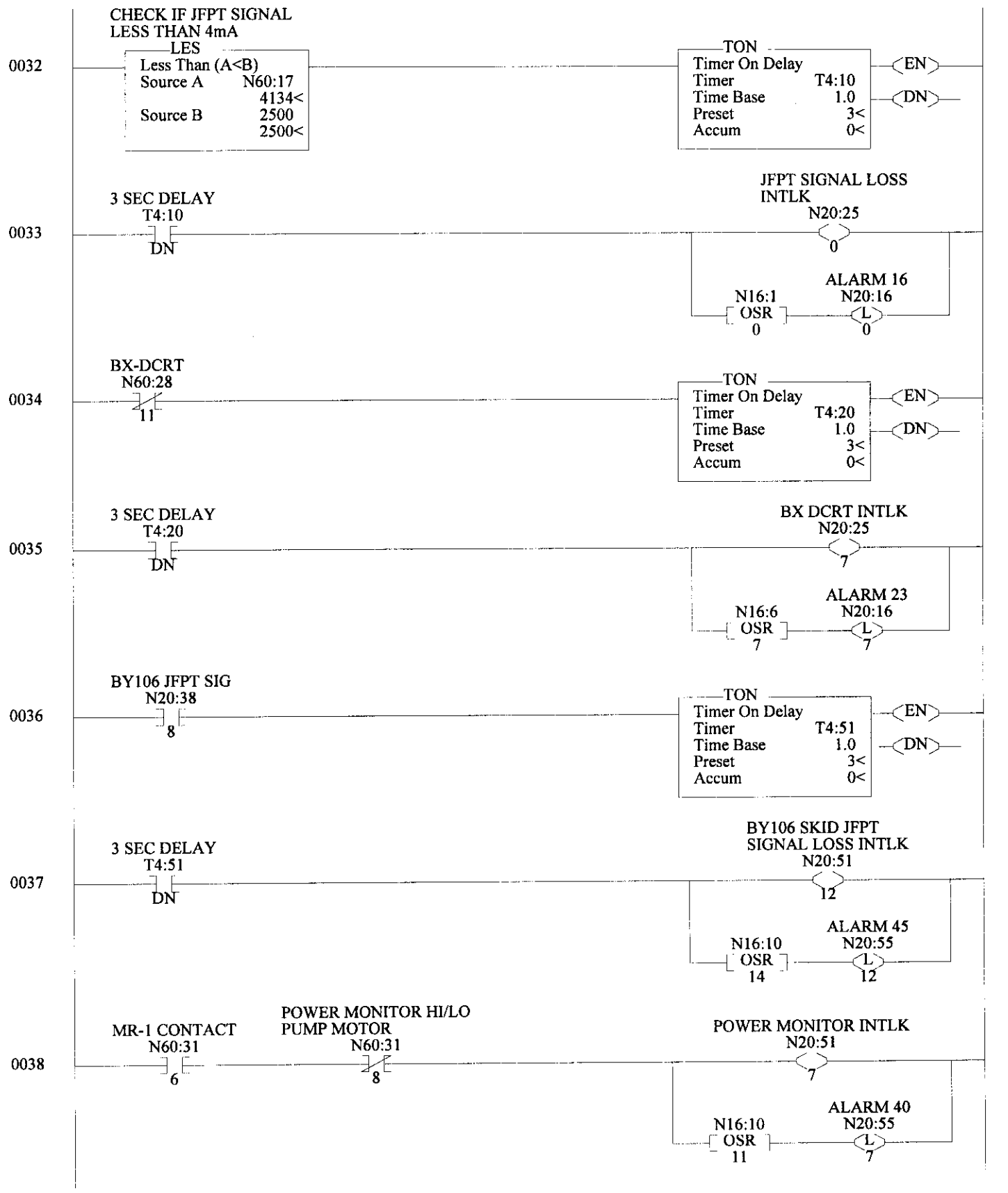
0032
CHECK IF JFPT SIGNAL LESS THAN 4mA
LES
Less Than (A<B)
Source A N60:17
4134<
Source B 2500
2500<
TON
Timer On Delay
Timer T4:10
Time Base 1.0
Preset 3<
Accum 0<
EN
DN
0033
3 SEC DELAY
T4:10
DN
JFPT SIGNAL LOSS INTLK
N20:25
0
N16:1
OSR
0
ALARM 16
N20:16
L
0
0034
BX-DCRT
N60:28
11
TON
Timer On Delay
Timer T4:20
Time Base 1.0
Preset 3<
Accum 0<
EN
DN
0035
3 SEC DELAY
T4:20
DN
BX DCRT INTLK
N20:25
7
N16:6
OSR
7
ALARM 23
N20:16
L
7
0036
BY106 JFPT SIG
N20:38
8
TON
Timer On Delay
Timer T4:51
Time Base 1.0
Preset 3<
Accum 0<
EN
DN
0037
3 SEC DELAY
T4:51
DN
BY106 SKID JFPT SIGNAL LOSS INTLK
N20:51
12
N16:10
OSR
14
ALARM 45
N20:55
L
12
0038
MR-1 CONTACT
N60:31
6
POWER MONITOR HI/LO PUMP MOTOR
N60:31
8
POWER MONITOR INTLK
N20:51
7
N16:10
OSR
11
ALARM 40
N20:55
L
7

LAD 5 - --- Total Rungs in File = 76

0039
FGM HI LEVEL N60:28 9 — FGM HI LEVEL N60:28 9 — FGM HI LFL INTLK N20:25 6
N16:1 OSR 6 — ALARM 22 N20:16 L 6

0040
CGM HI LFL N60:28 8 — N60:28 8 — CGM HI LFL INTLK N20:25 9
N16:1 OSR 9 — ALARM 25 N20:16 L 9

0041
CGM TROUBLE N60:28 10 — N60:28 10 — TON
Timer On Delay
Timer T4:13
Time Base 1.0
Preset 3<
Accum 0<
EN
DN

0042
3 SEC DELAY T4:13 DN — CGM TRB INTLK N20:25 14
N16:6 OSR 15 — ALARM 31 N20:16 L 14

0043
MR-1 CONTACT N60:31 6 — DIL CONTACTOR N60:28 1 — DIL FLOW N60:28 7 — TON
Timer On Delay
Timer T4:52
Time Base 1.0
Preset 300<
Accum 0<
EN
DN

0044
5 MIN DELAY T4:52 DN — DIL NO FLOW INTLK N20:51 3
N16:1 OSR 12 — ALARM 36 N20:55 L 3

0045
BY106 HI FLUSH N20:38 5 — TON
Timer On Delay
Timer T4:87
Time Base 1.0
Preset 1200<
Accum 0<
EN
DN

LAD 5 - --- Total Rungs in File = 76

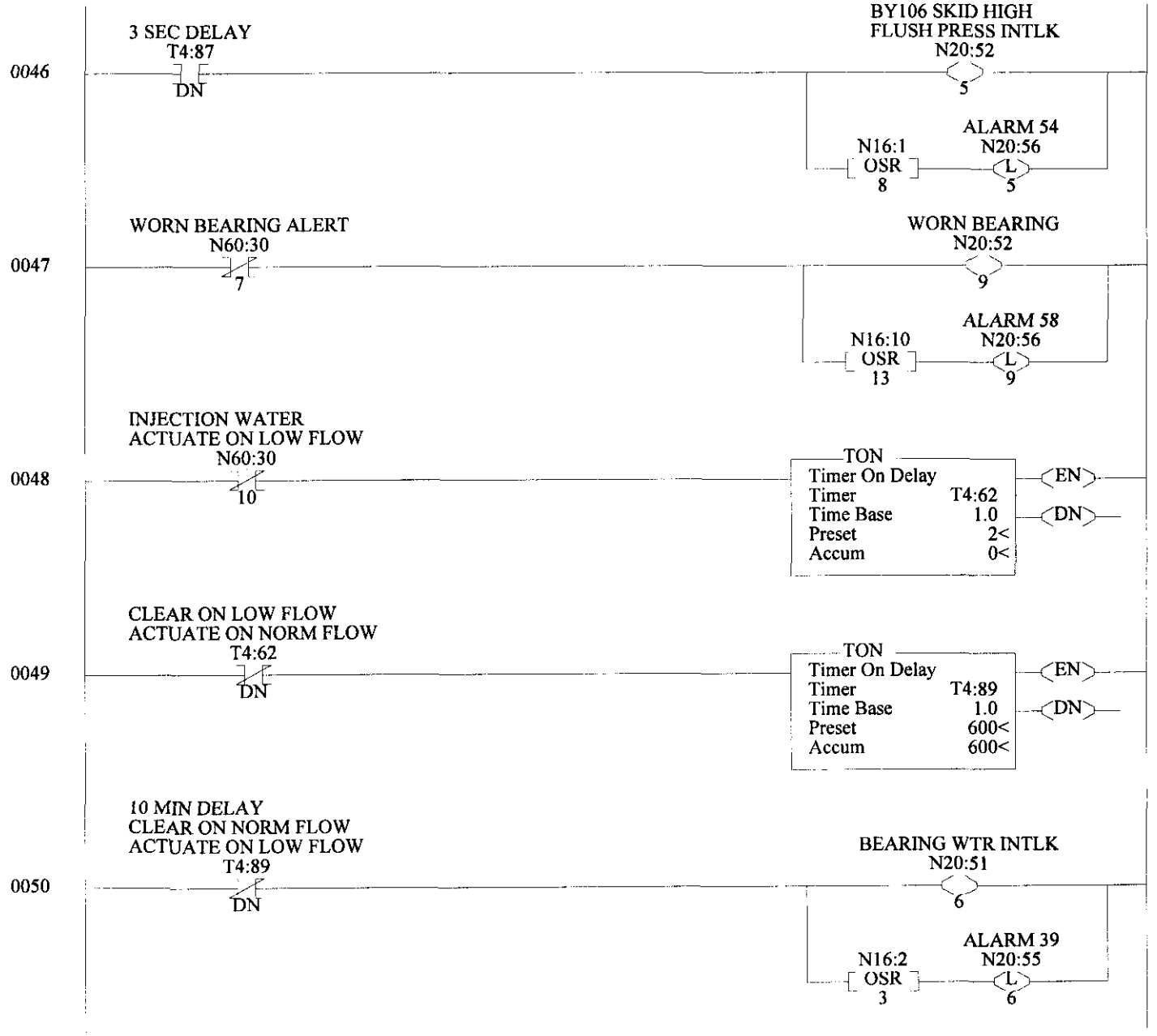

LAD 5 - --- Total Rungs in File = 76

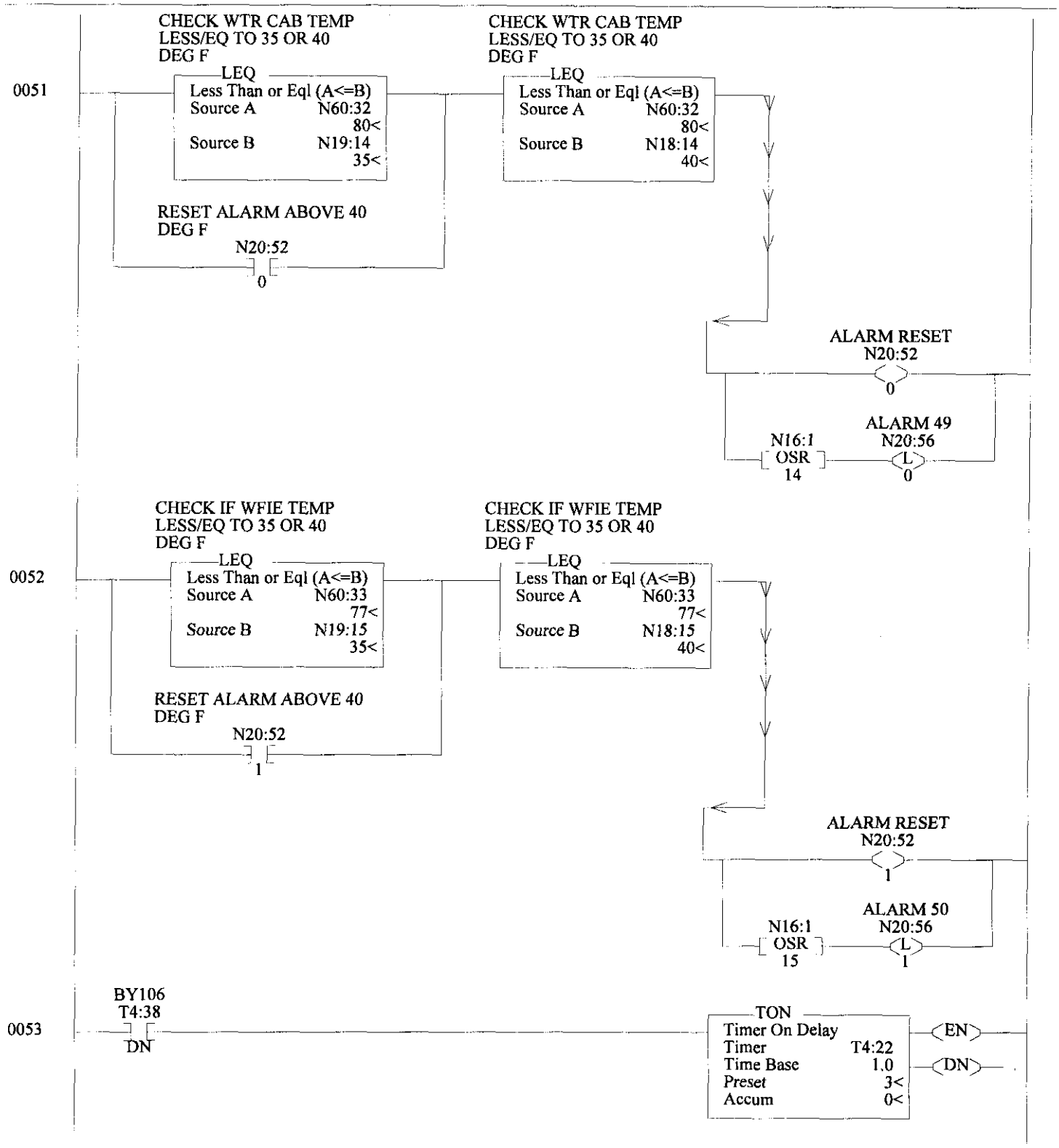

LAD 5 - --- Total Rungs in File = 76

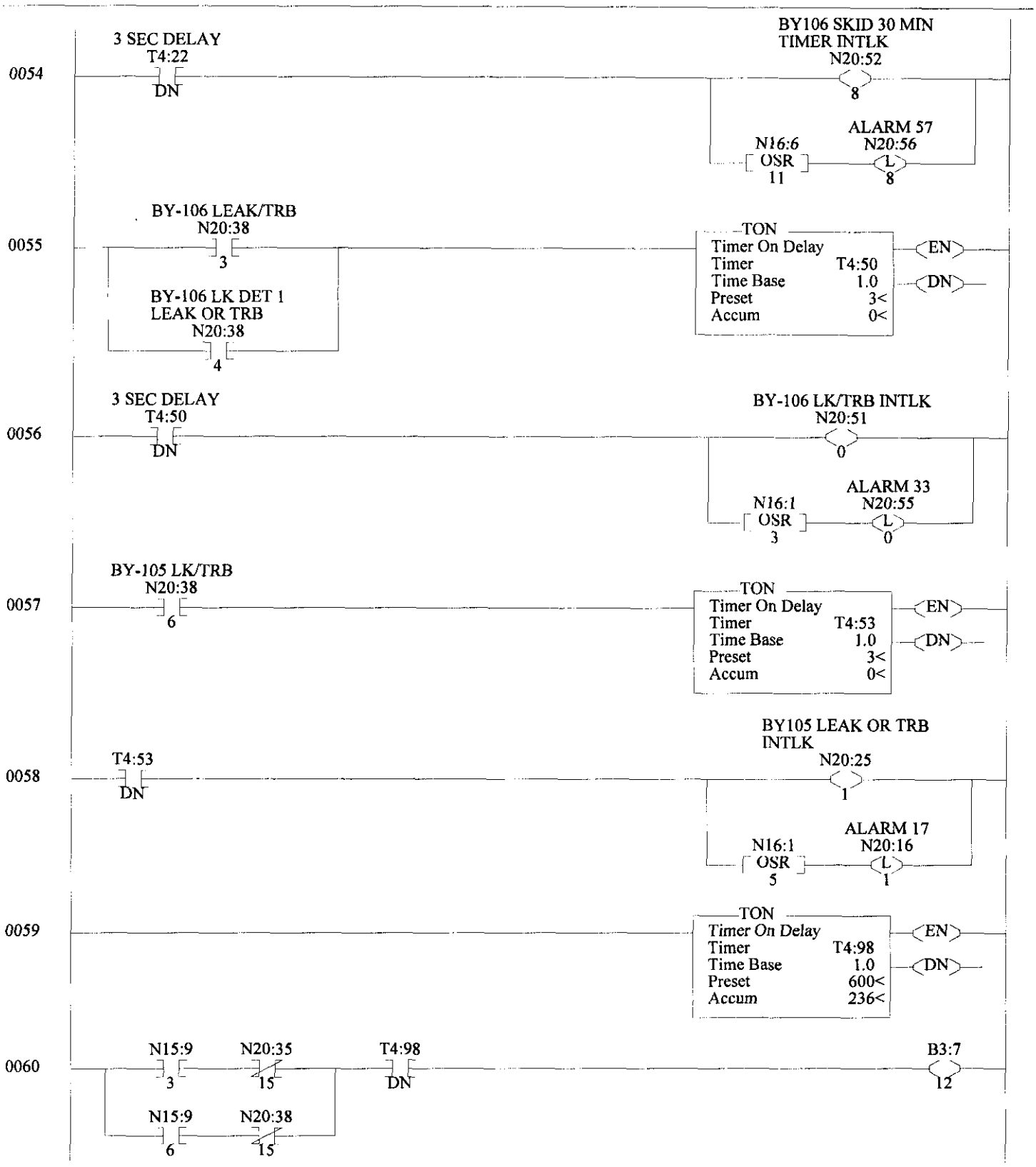

LAD 5 - --- Total Rungs in File = 76

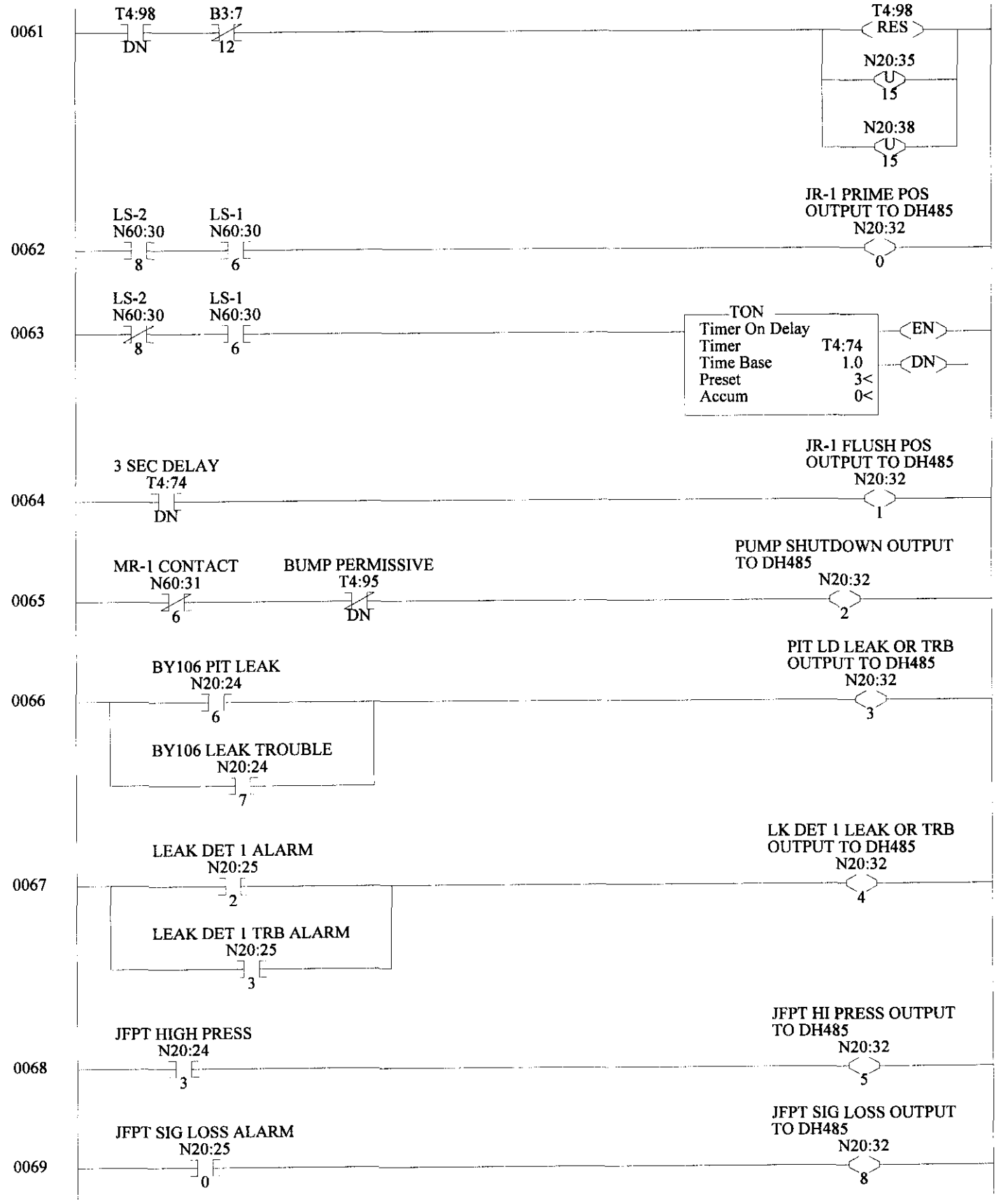

0070

NEQ
Not Equal
Source A N20:15
32<
Source B N13:0
0<

NEQ
Not Equal
Source A N20:16
0<
Source B N13:0
0<

NEQ
Not Equal
Source A N20:55
0<
Source B N13:0
0<

NEQ
Not Equal
Source A N20:56
515<
Source B N13:0
0<

FLASH FOR ALARM CONDITIONS
N20:17
9

0071

NEQ
Not Equal
Source A N20:24
8192<
Source B N13:0
0<

NEQ
Not Equal
Source A N20:25
0<
Source B N13:0
0<

NEQ
Not Equal
Source A N20:51
64<
Source B N13:0
0<

NEQ
Not Equal
Source A N20:52
0<
Source B N13:0
0<

COLOR CHANGE FOR ALARM CONDITIONS
N20:17
13

LAD 5 - --- Total Rungs in File = 76

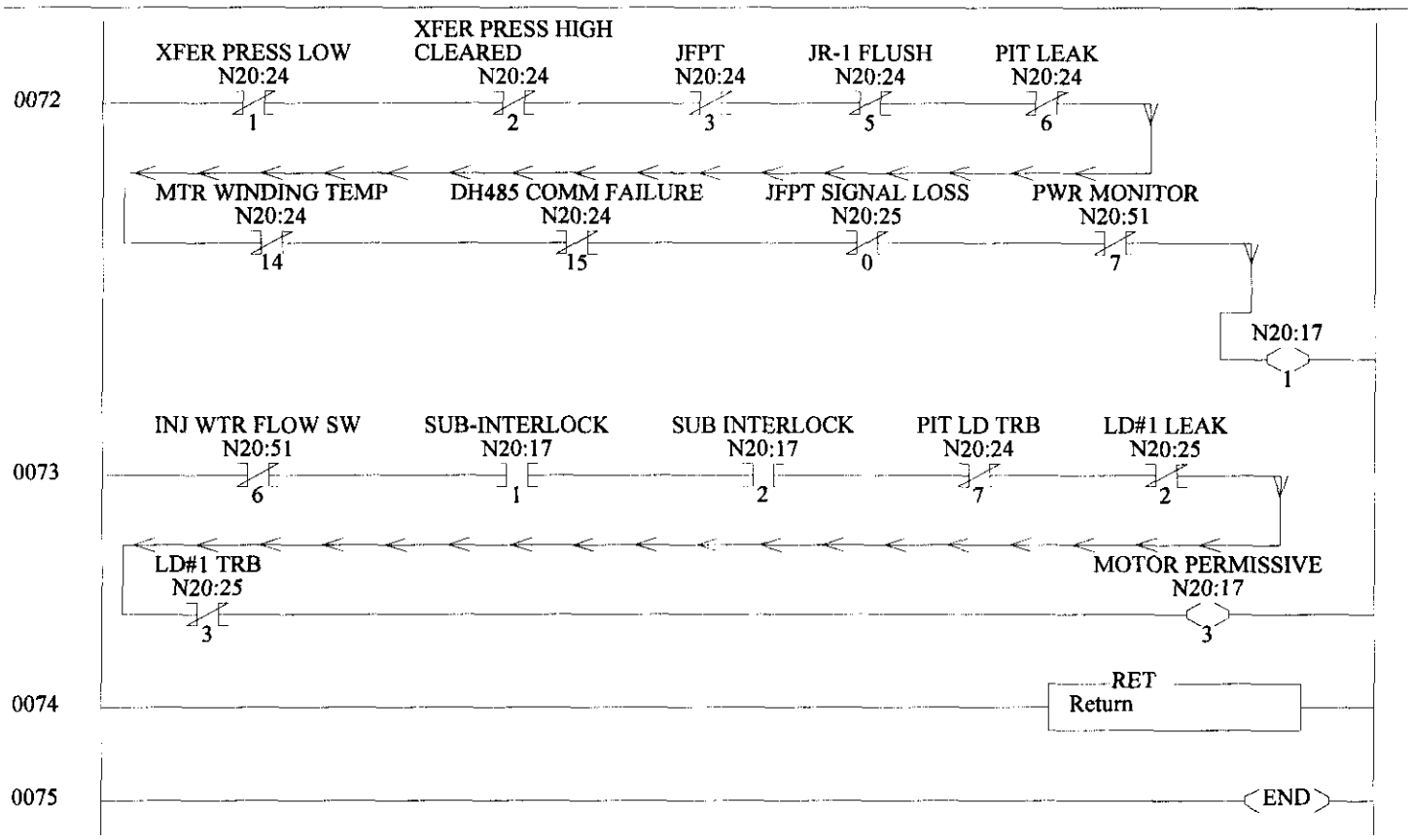

LAD 6 - --- Total Rungs in File = 6

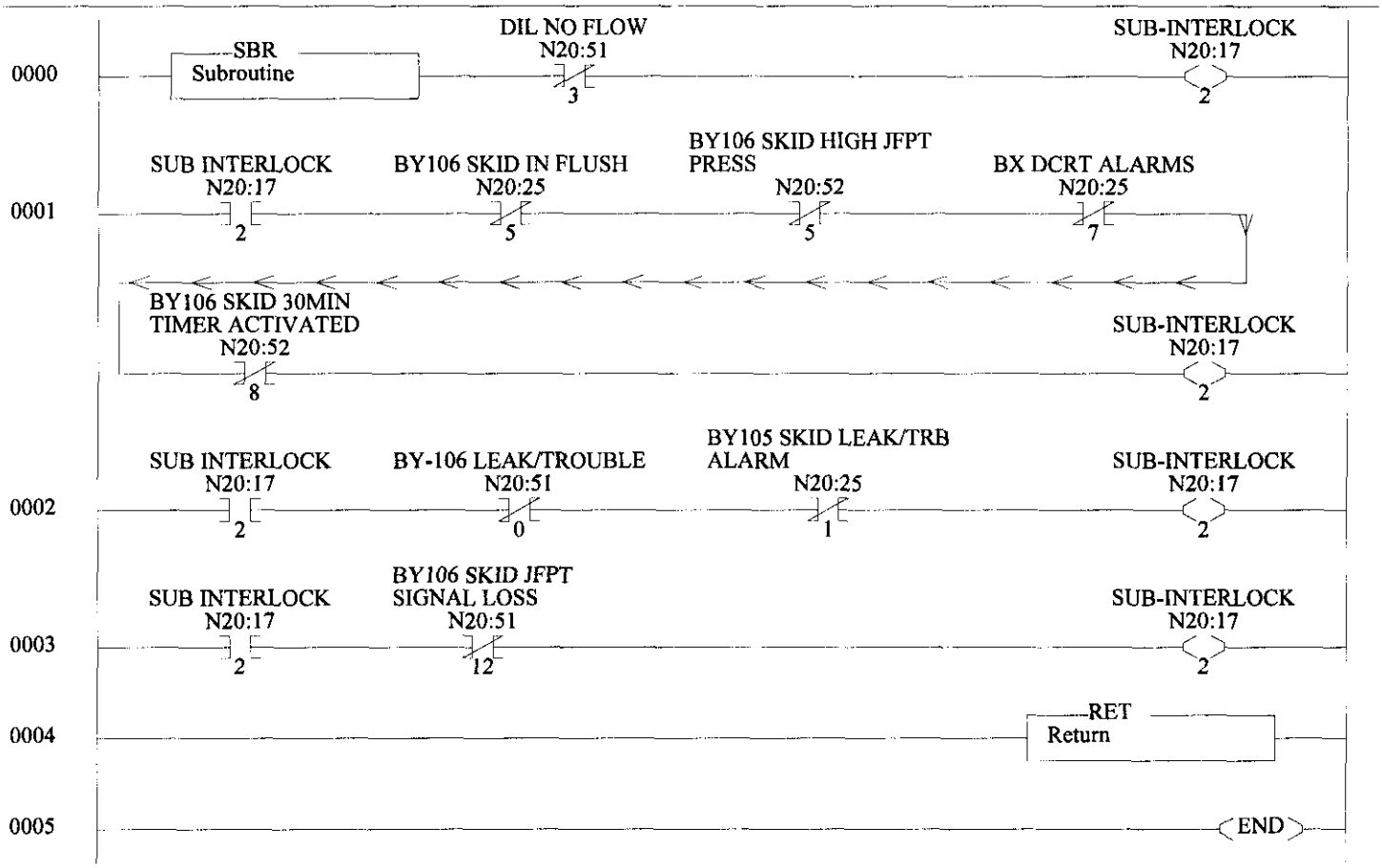

LAD 7 - --- Total Rungs in File = 36

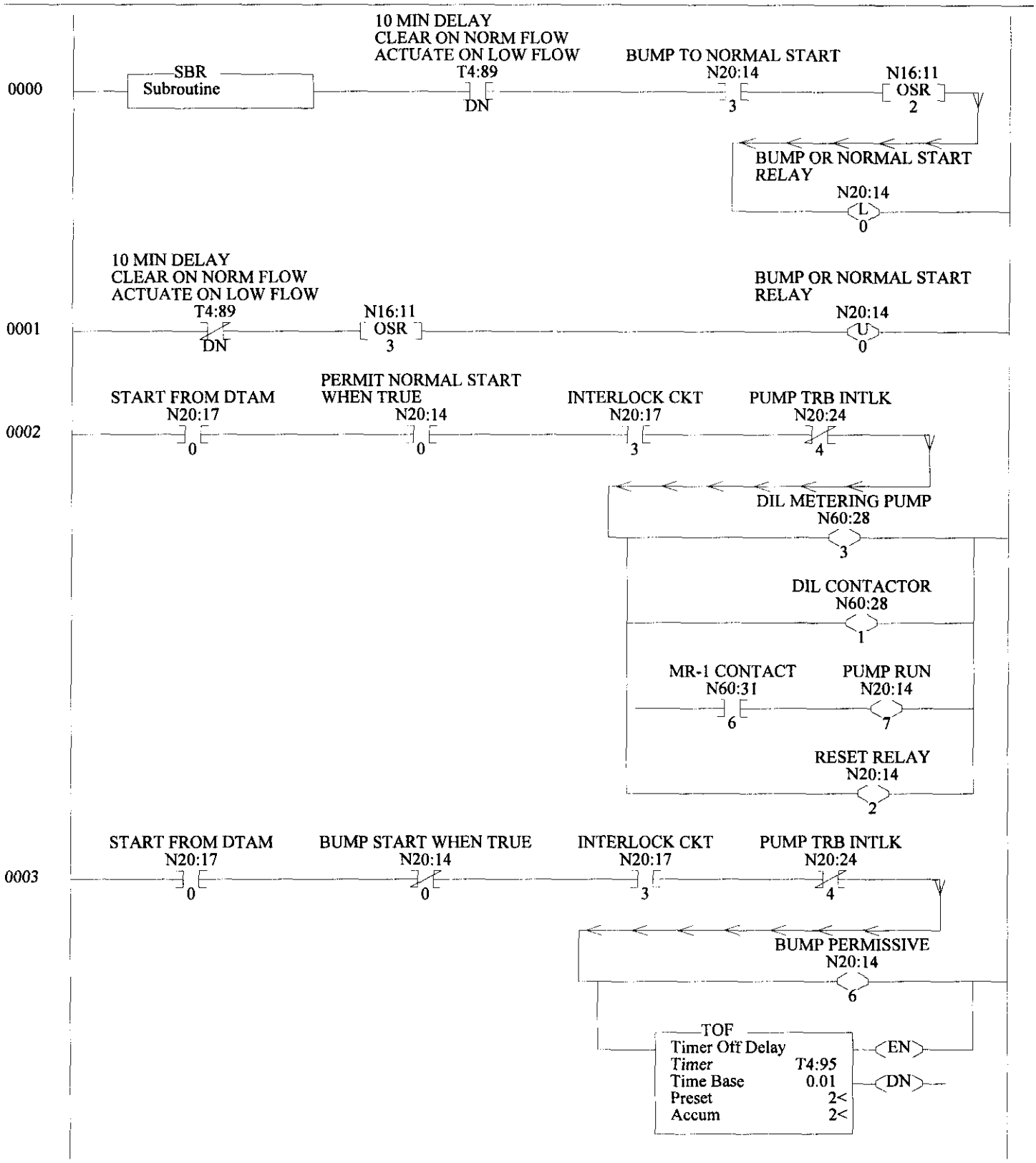

LAD 7 - --- Total Rungs in File = 36

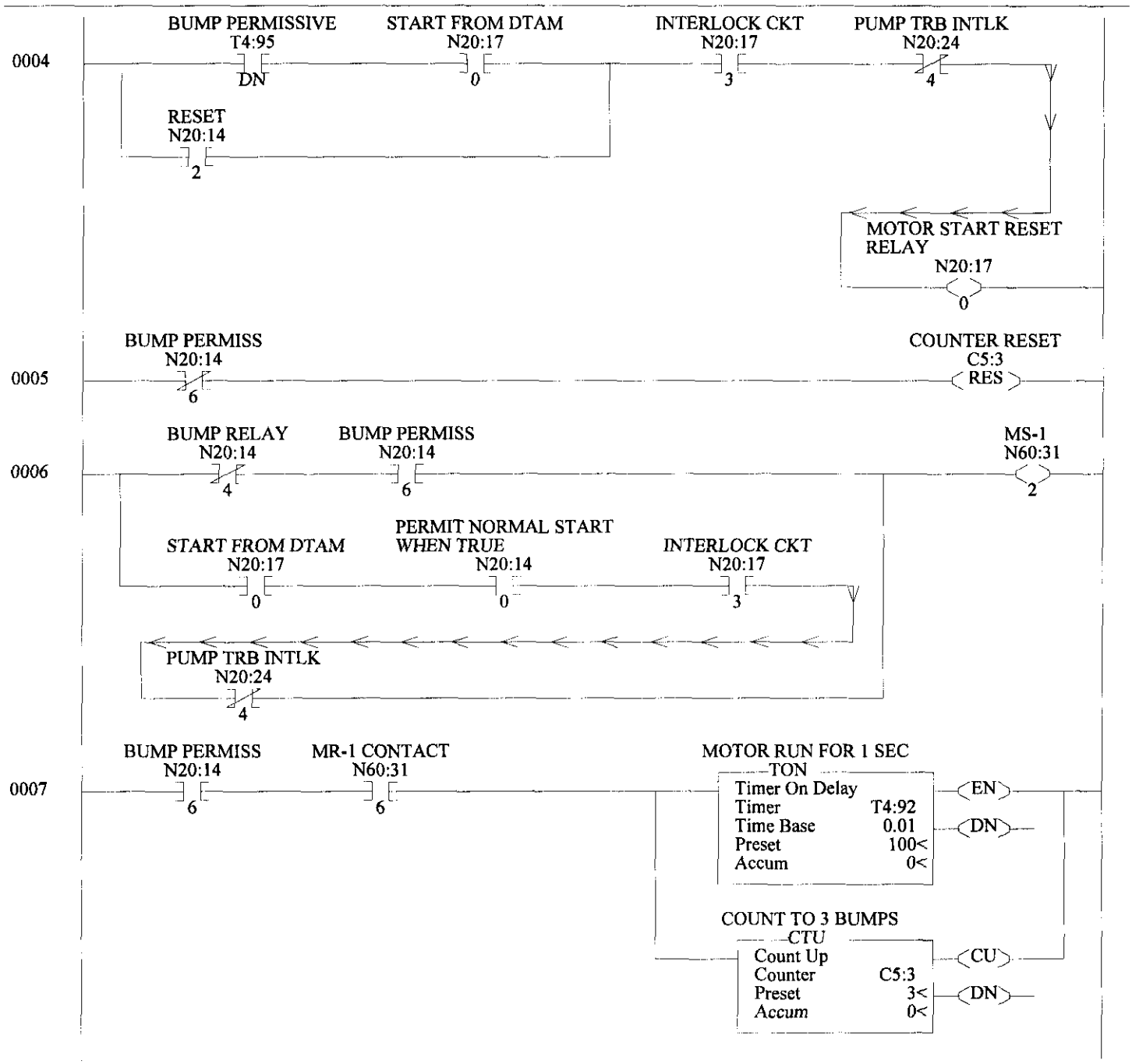

LAD 7 - --- Total Rungs in File = 36

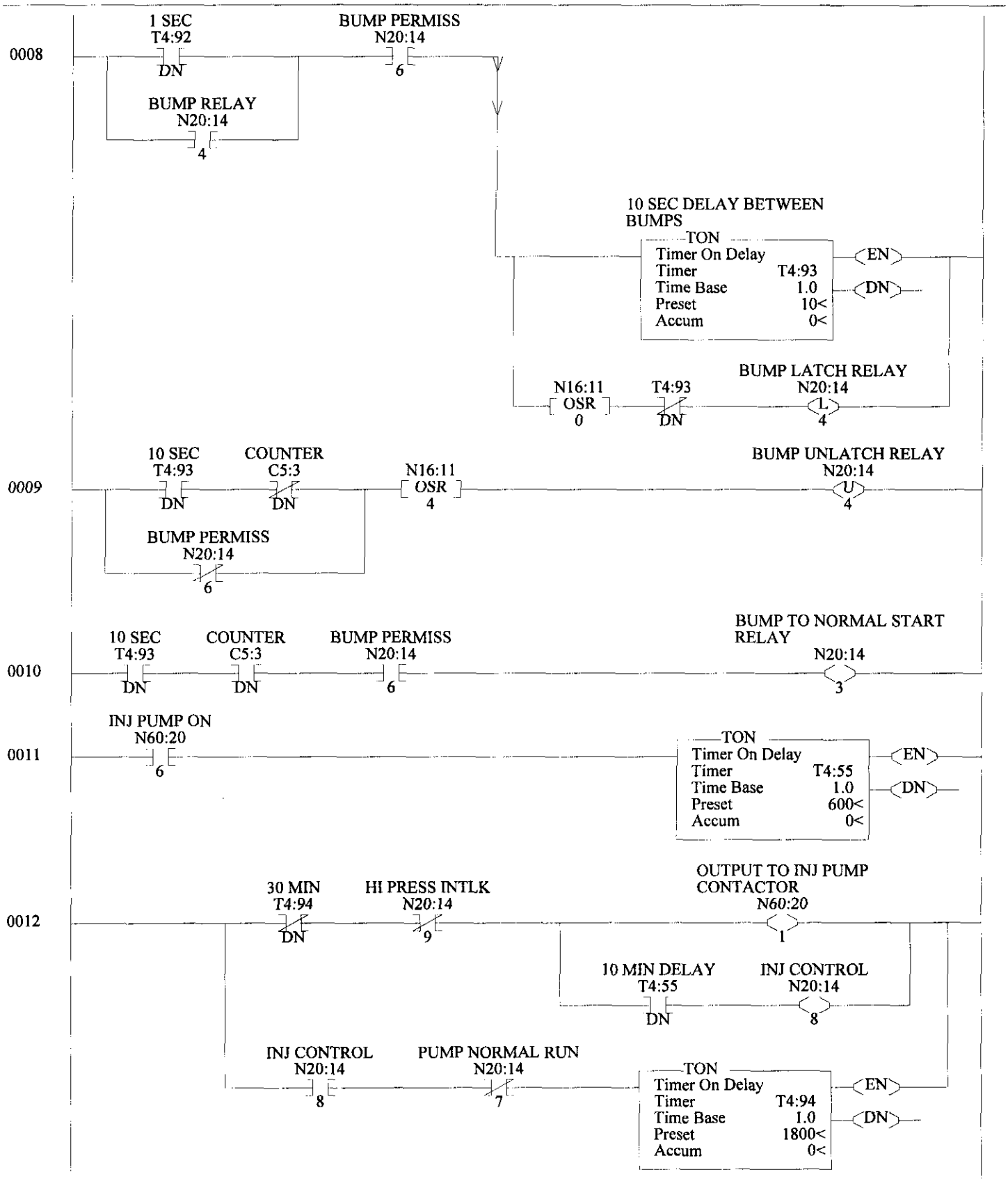

0013 HI XFER PRESS N20:24 [2] — N16:11 OSR 7 — HI XFER PRESS LATCH N20:14 (L) 10

THIS RUNG STARTS THE 5 SEC TIMER UPON A HIGH TRANSFER PRESSURE TRIP.

0014 HI XFER PRESS LATCH N20:14 [10] — TON Timer On Delay, Timer T4:54, Time Base 1.0, Preset 5<, Accum 0< — (EN) (DN)

UPON TIMING OUT OF THE 5 SEC TIMER, THE INJECTION PUMP WILL SHUTDOWN.

0015 5 SEC DELAY T4:54 [DN] — HI PRESS INTLK N20:14 ( ) 9

0016 XFER PRESS HIGH CLEARED N20:24 [2] — INJ PUMP OFF N60:20 [6] — N16:11 OSR 5 — HI XFER PRESS UNLATCH N20:14 (U) 10

0017 MOTOR START RESET RELAY N20:17 [0] — N16:6 OSR 1 — MVM Masked Move, Source N13:0 0<, Mask 0040h 64<, Dest N20:17 -5628<

0018 N20:17 [7] — JSR Jump To Subroutine, SBR File Number U:11

0019 — SCL Scale, Source N60:12 3293<, Rate [/10000] 12499 12499<, Offset -4096 -4096<, Dest N10:28 20<

0020 — PID PID, Control Block N10:0, Process Variable N10:28, Control Variable N10:29, Control Block Length 23, Setup Screen

LAD 7 - --- Total Rungs in File = 36

0021 SGT LOW N20:24 13 — SCL
Scale
Source N10:29 0<
Rate [/10000] 15239 15239<
Offset 6242 6242<
Dest N60:4 3277<

0022 SGT LOW N20:24 13 — LEQ
Less Than or Eql (A<=B)
Source A N60:12 3293<
Source B 3277 3277< — MOV
Move
Source 3277 3277<
Dest N60:4 3277<

0023 GRT
Greater Than (A>B)
Source A N60:12 3293<
Source B 16384 16384< — MOV
Move
Source 16384 16384<
Dest N60:4 3277<

0024 COP
Copy File
Source #N20:18
Dest #N10:2
Length 4

0025 MOV
Move
Source N10:28 20<
Dest N20:22 20<

0026 N20:17 6 — MOV
Move
Source N20:23 0<
Dest N10:29 0<
N10:0 1

0027 N20:17 6 — MOV
Move
Source N10:29 0<
Dest N20:23 0<

0028 COP
Copy File
Source #N20:26
Dest #N10:13
Length 1

LAD 7 - --- Total Rungs in File = 36

0029
MOV
Move
Source S:9
96<
Dest N20:27
96<

0030
MOV
Move
Source N20:28
64<
Dest N15:0
64<

0031
MOV
Move
Source N20:29
64<
Dest N15:5
64<

0032
MOV
Move
Source C5:1.ACC
925<
Dest N20:30
925<

0033
MOV
Move
Source C5:2.ACC
1<
Dest N20:31
1<

0034
RET
Return

0035
END

LAD 8 - --- Total Rungs in File = 6

ALARM ACKNOWLEDGE FROM DTAM

0000
SBR Subroutine
N20:17 10
FLL Fill File Source N13:1 Dest #N12:0 Length 4
TON Timer On Delay Timer T4:49 Time Base 1.0 Preset 1< Accum 0< EN DN

0001
T4:49 DN
MVM Masked Move Source N13:0 0< Mask 0400h 1024< Dest N20:17 -5628<

0002
NEQ Not Equal Source A N12:0 0< Source B 0 0<
NEQ Not Equal Source A N12:1 0< Source B 0 0<
NEQ Not Equal Source A N12:2 0< Source B 0 0<
NEQ Not Equal Source A N12:3 0< Source B 0 0<
TON Timer On Delay Timer T4:48 Time Base 1.0 Preset 1< Accum 0< EN DN
N60:30 U 3
N60:30 U 1

0003
T4:48 DN
FLL Fill File Source N13:0 Dest #N12:0 Length 4

0004
RET Return

LAD 8 - --- Total Rungs in File = 6

0005 ——— (END)

LAD 9 - --- Total Rungs in File = 10

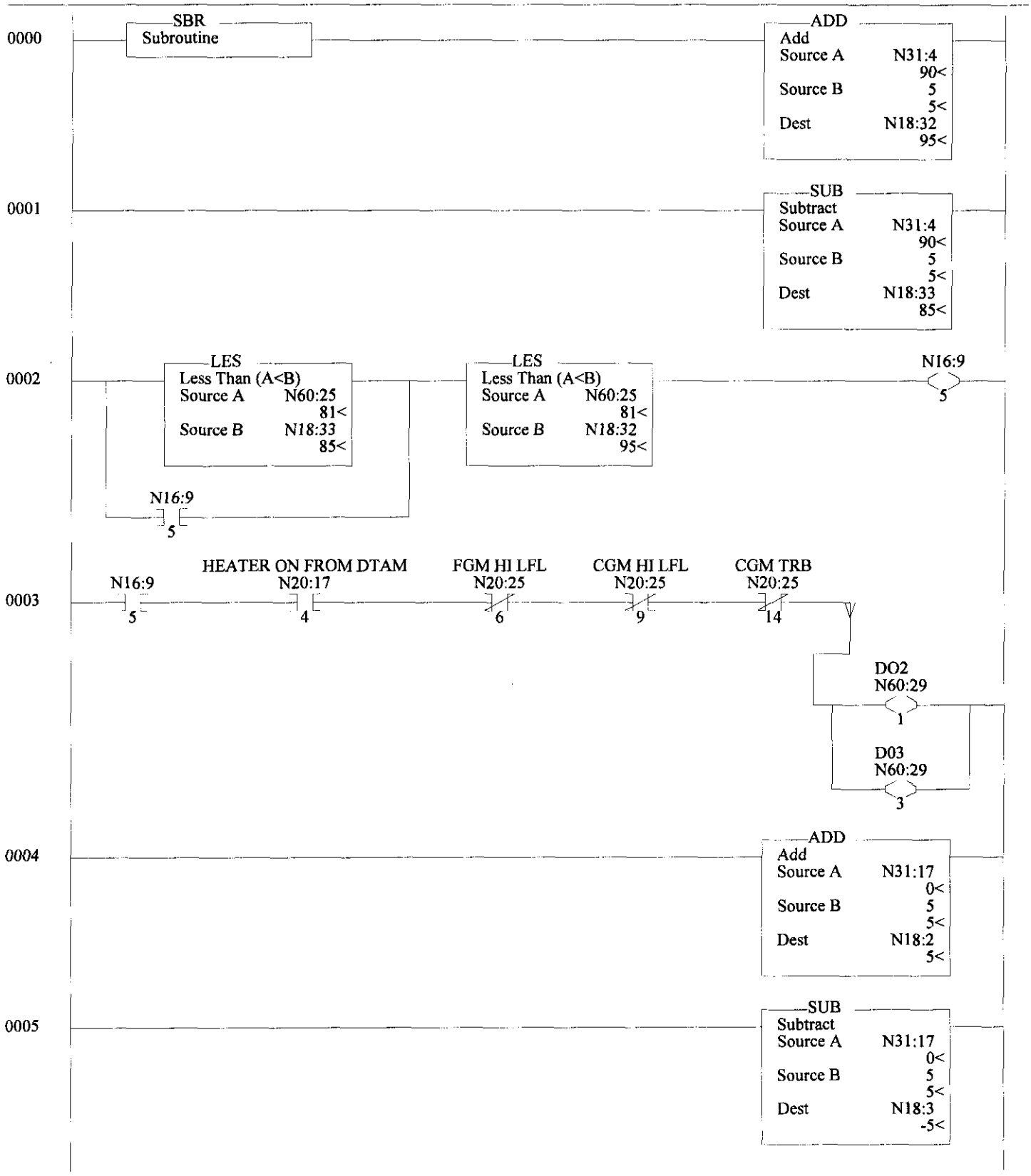

LAD 9 - --- Total Rungs in File = 10

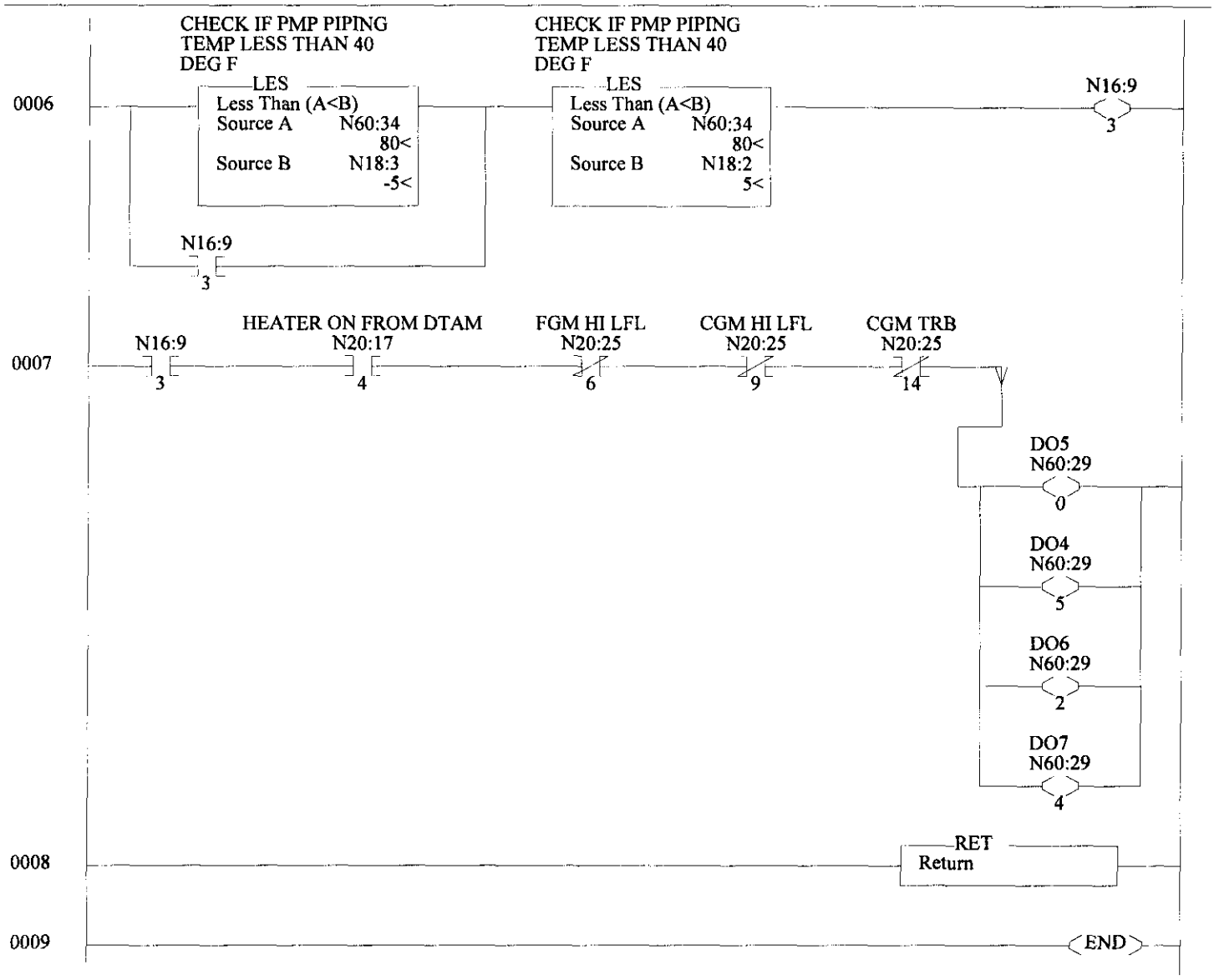

LAD 10 - --- Total Rungs in File = 14

0000 SBR Subroutine — CLR Clear Dest N7:0 0<

0001 CLR Clear Dest N7:20 0<

0002 CLR Clear Dest N7:40 0<

0003 CLR Clear Dest N7:60 0<

0004 CLR Clear Dest N7:80 0<

0005 CLR Clear Dest N7:100 8192<

0006 CLR Clear Dest N7:120 0<

0007 CLR Clear Dest N7:140 0<

0008 CLR Clear Dest N7:160 0<

0009 CLR Clear Dest N7:180 0<

0010 MOV Move Source 2 2< Dest N15:7 2<

0011 B3:7 U 6

LAD 10 - --- Total Rungs in File = 14

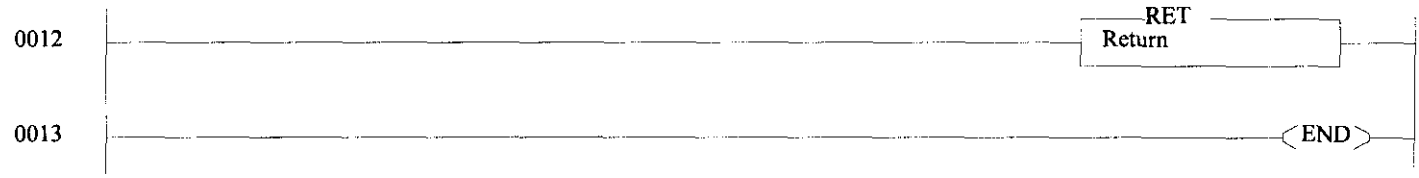

LAD 11 - --- Total Rungs in File = 3

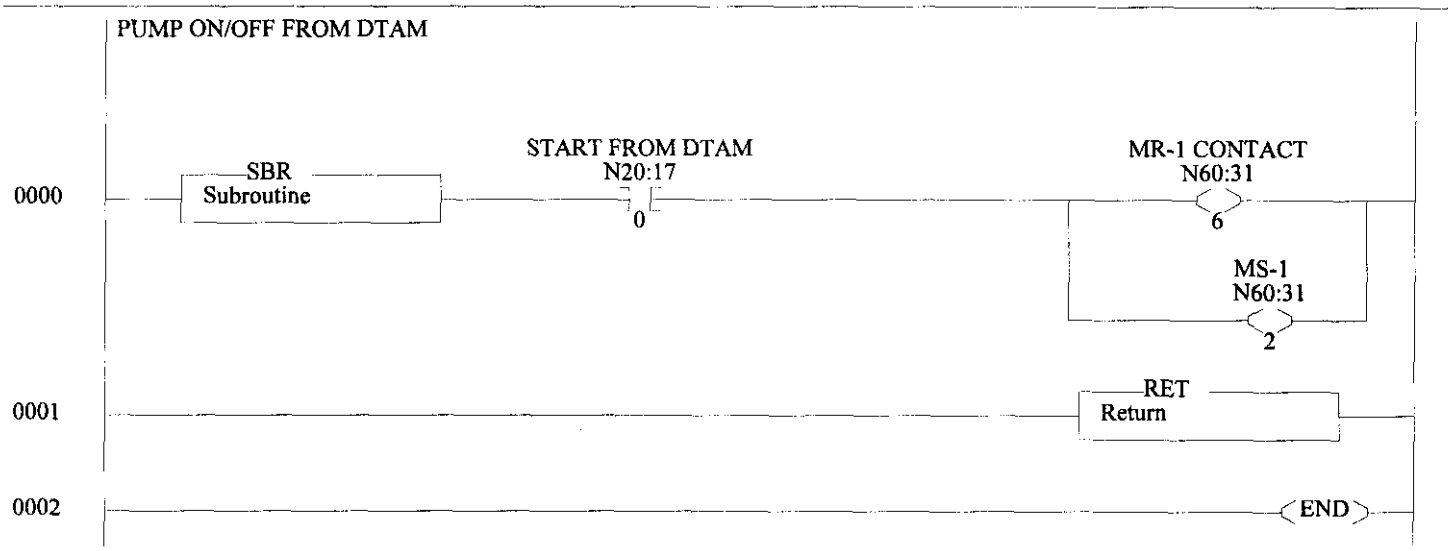

LAD 12 - --- Total Rungs in File = 14

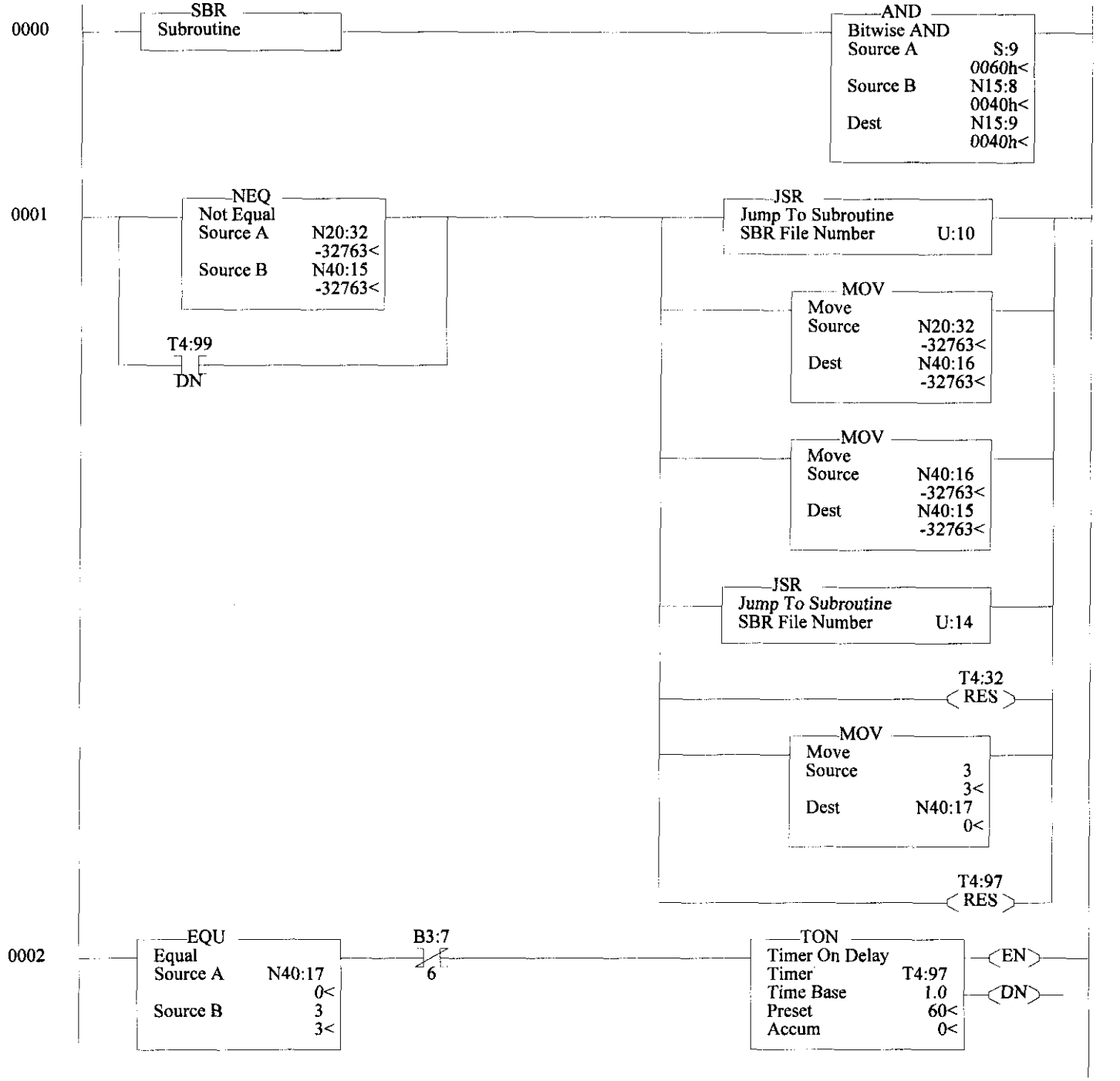

LAD 12 - --- Total Rungs in File = 14

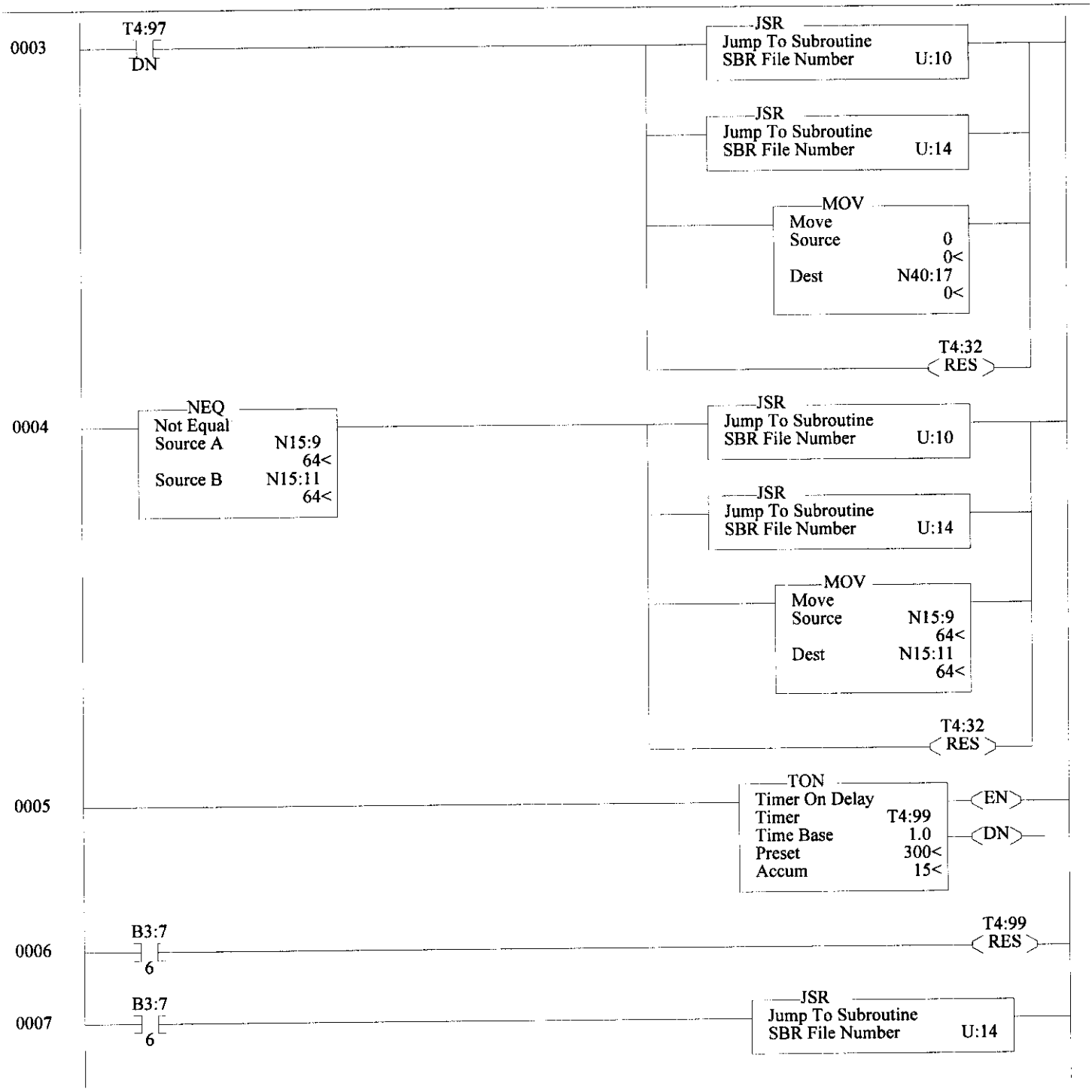

LAD 12 - --- Total Rungs in File = 14

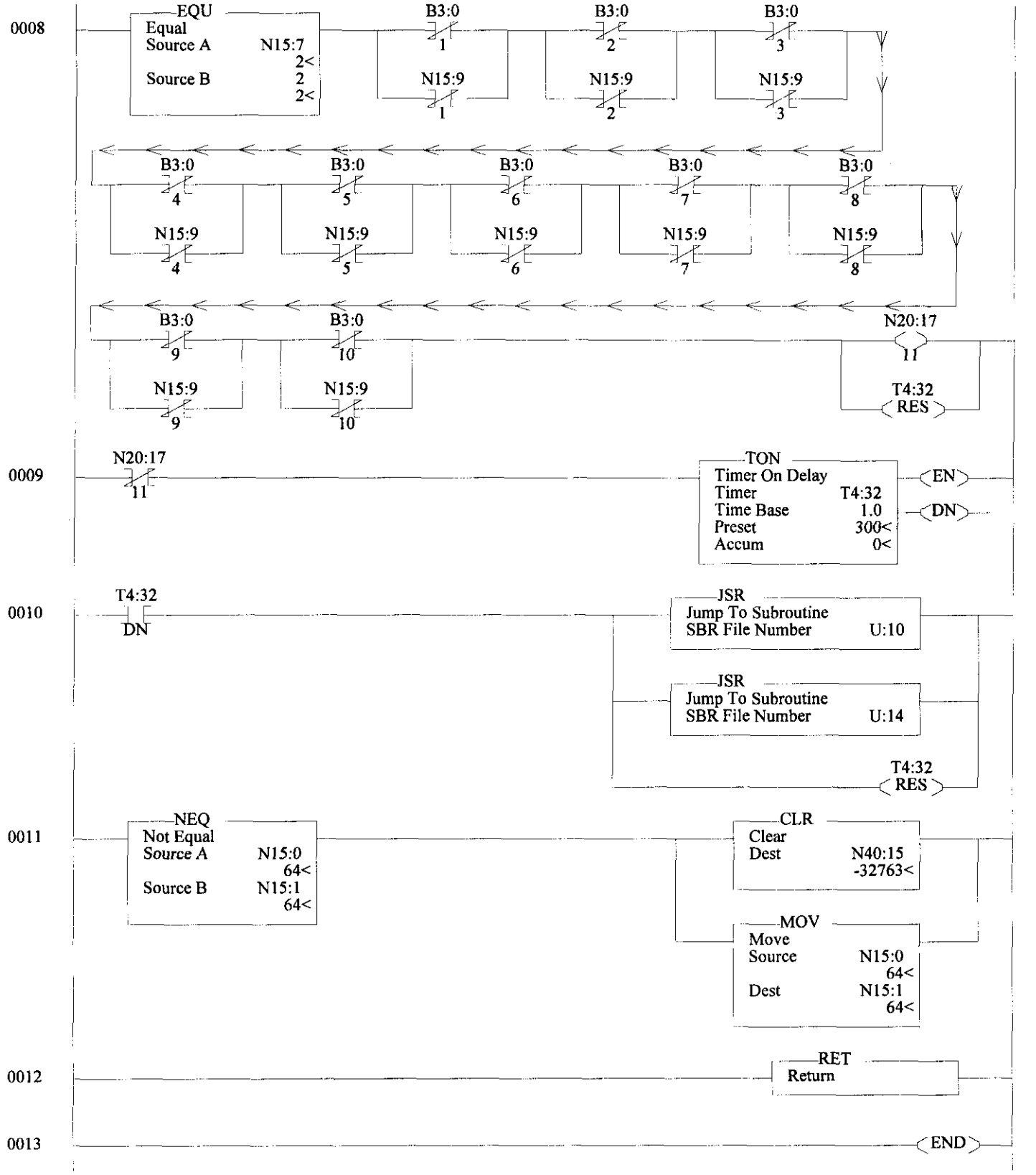

LAD 13 - --- Total Rungs in File = 6

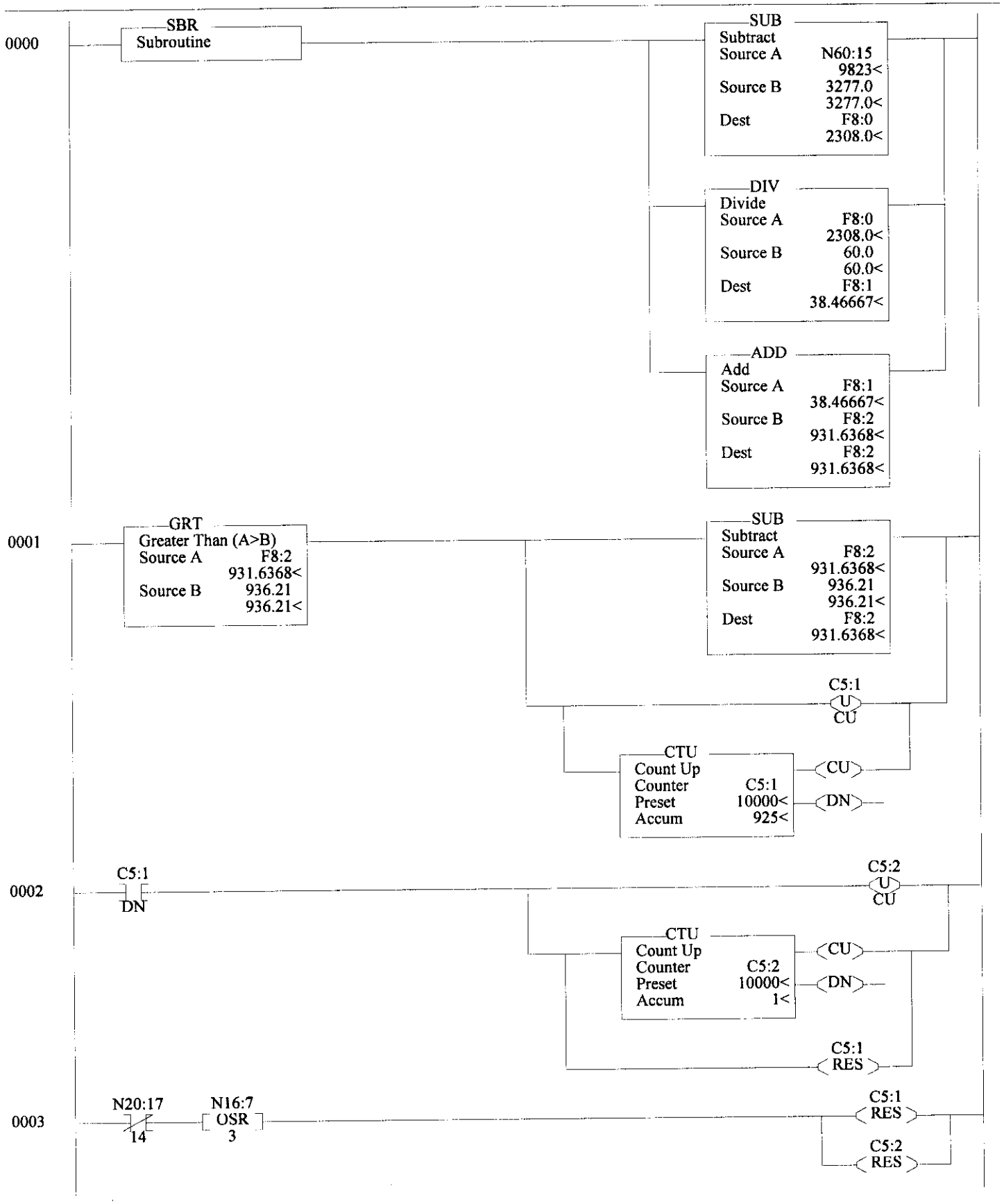

LAD 13 - --- Total Rungs in File = 6

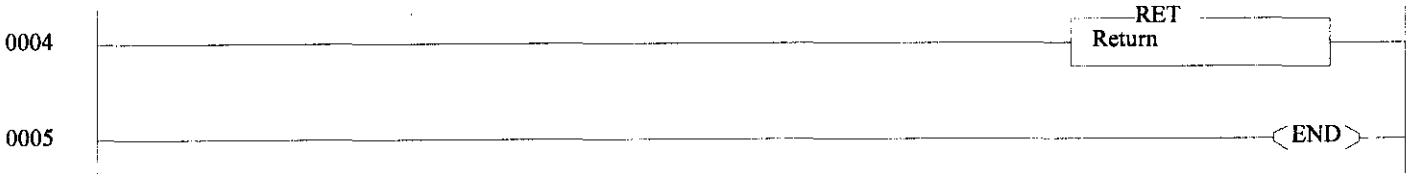

LAD 14 - --- Total Rungs in File = 14

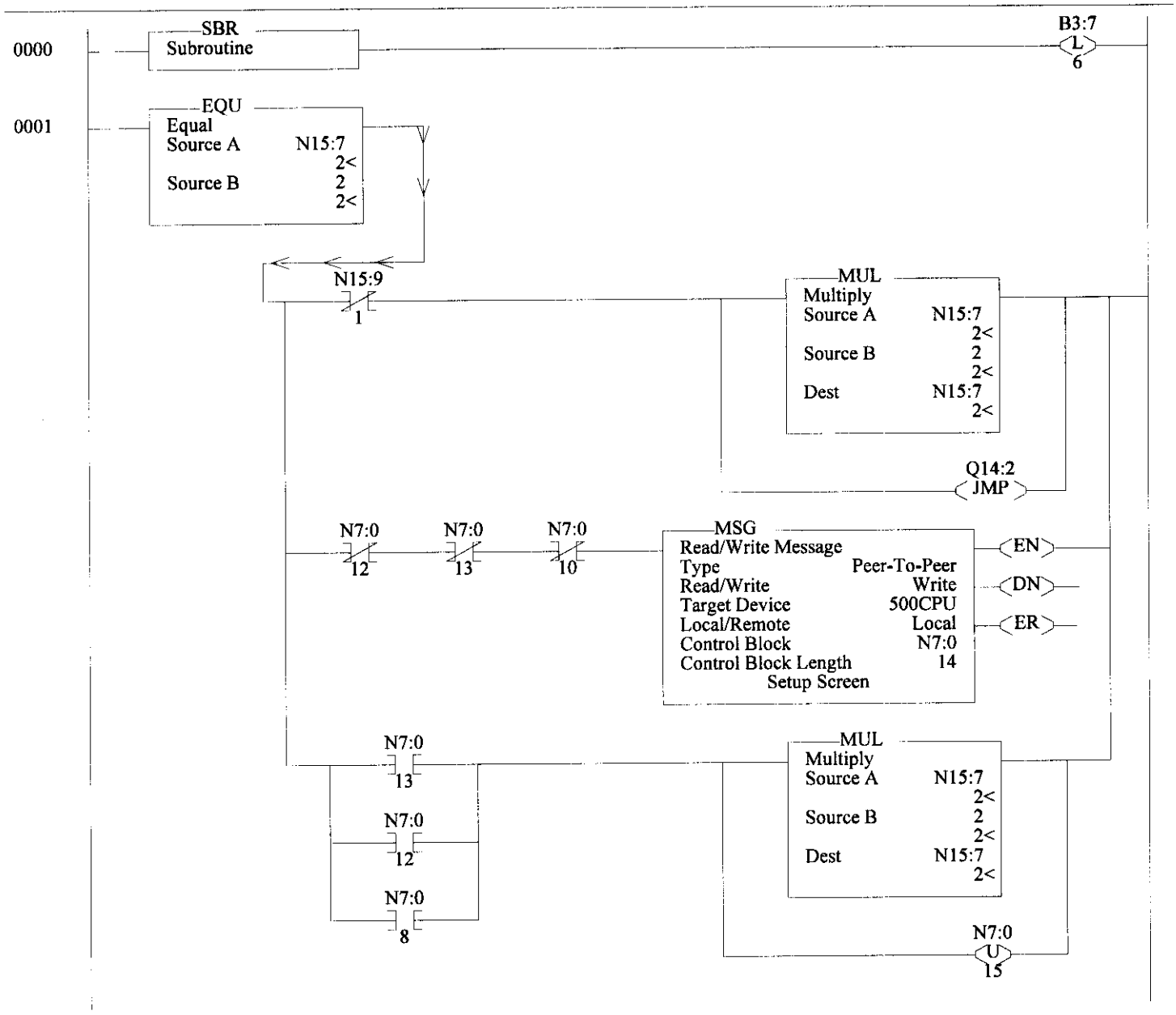

LAD 14 - --- Total Rungs in File = 14

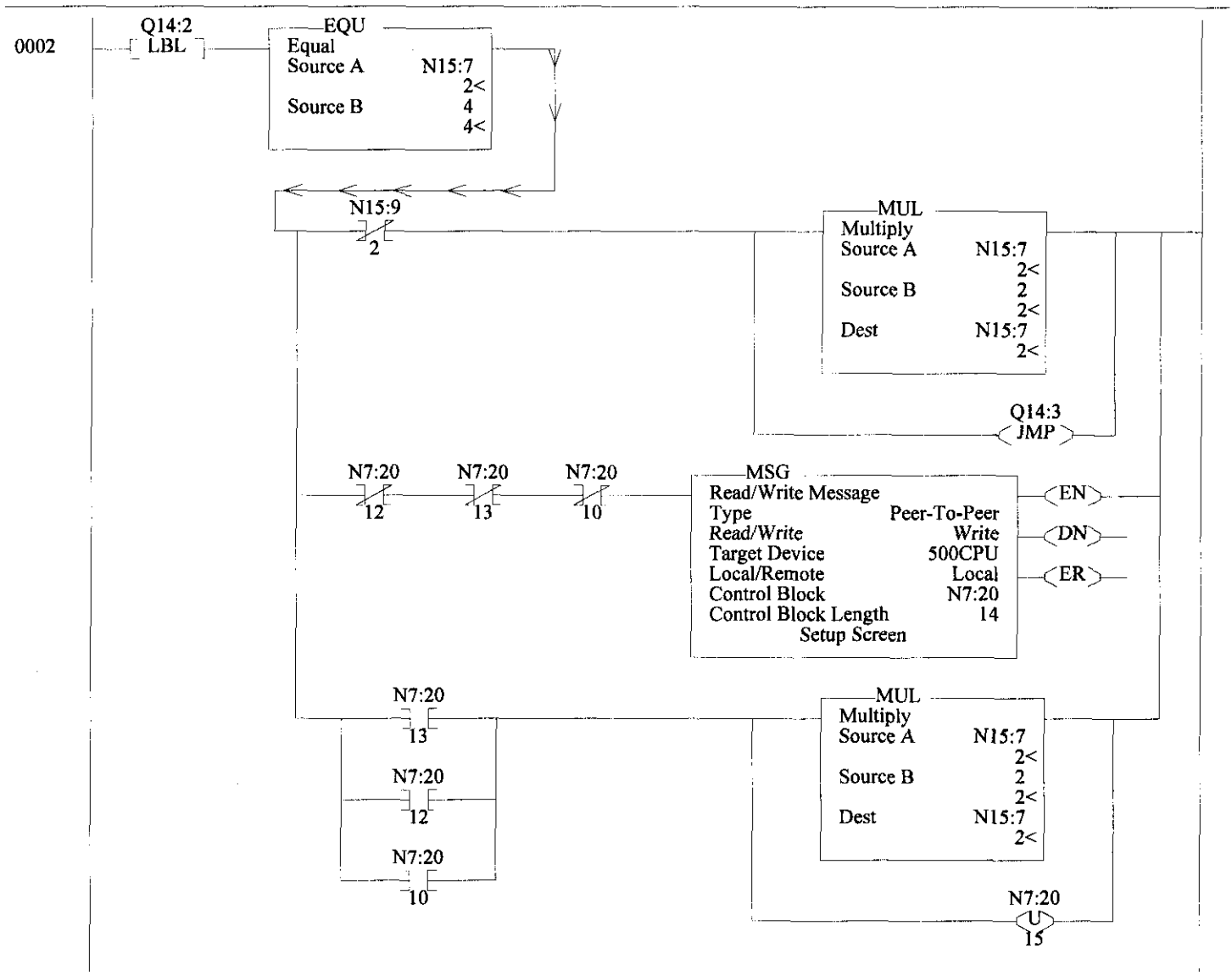

LAD 14 - --- Total Rungs in File = 14

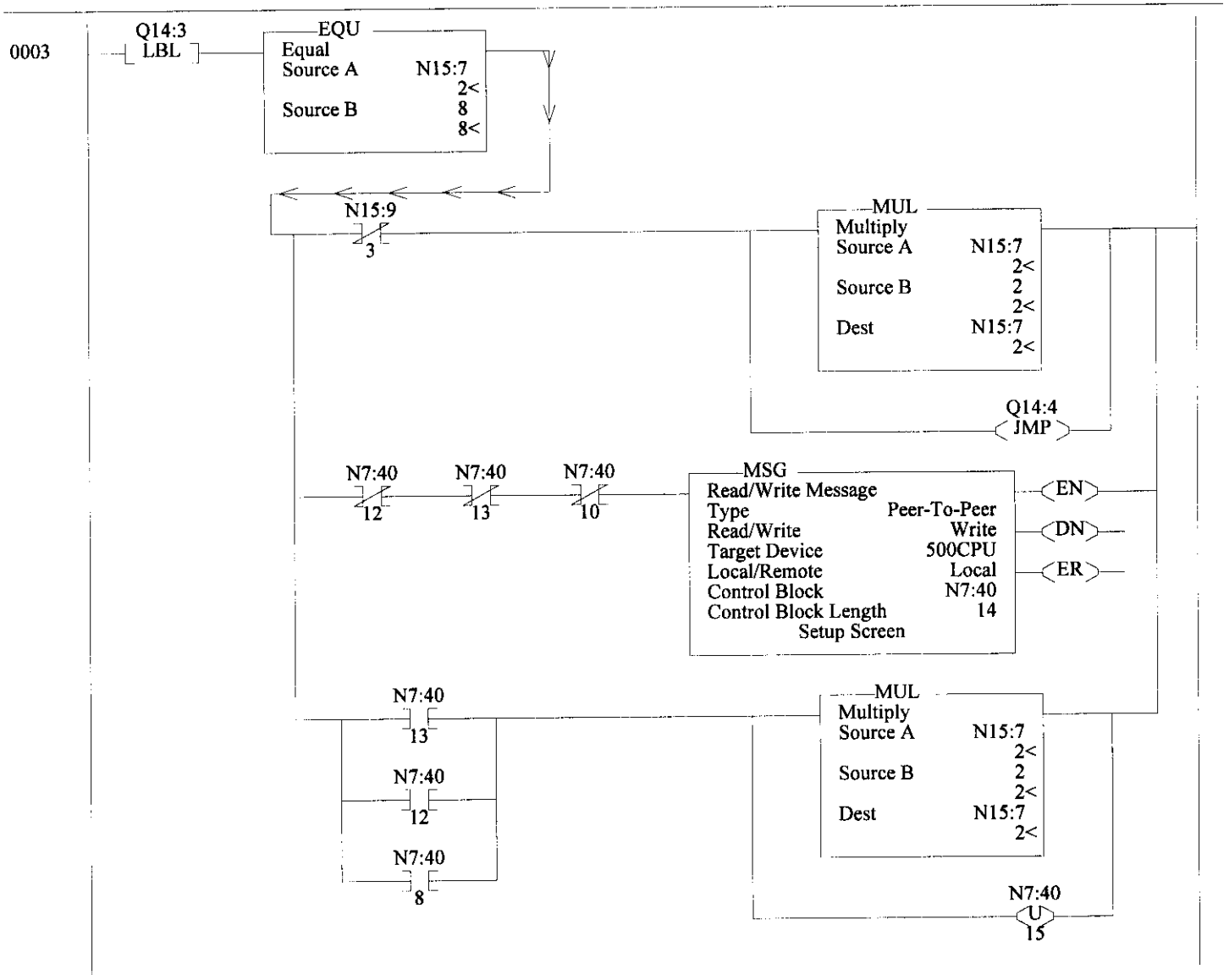

LAD 14 - --- Total Rungs in File = 14

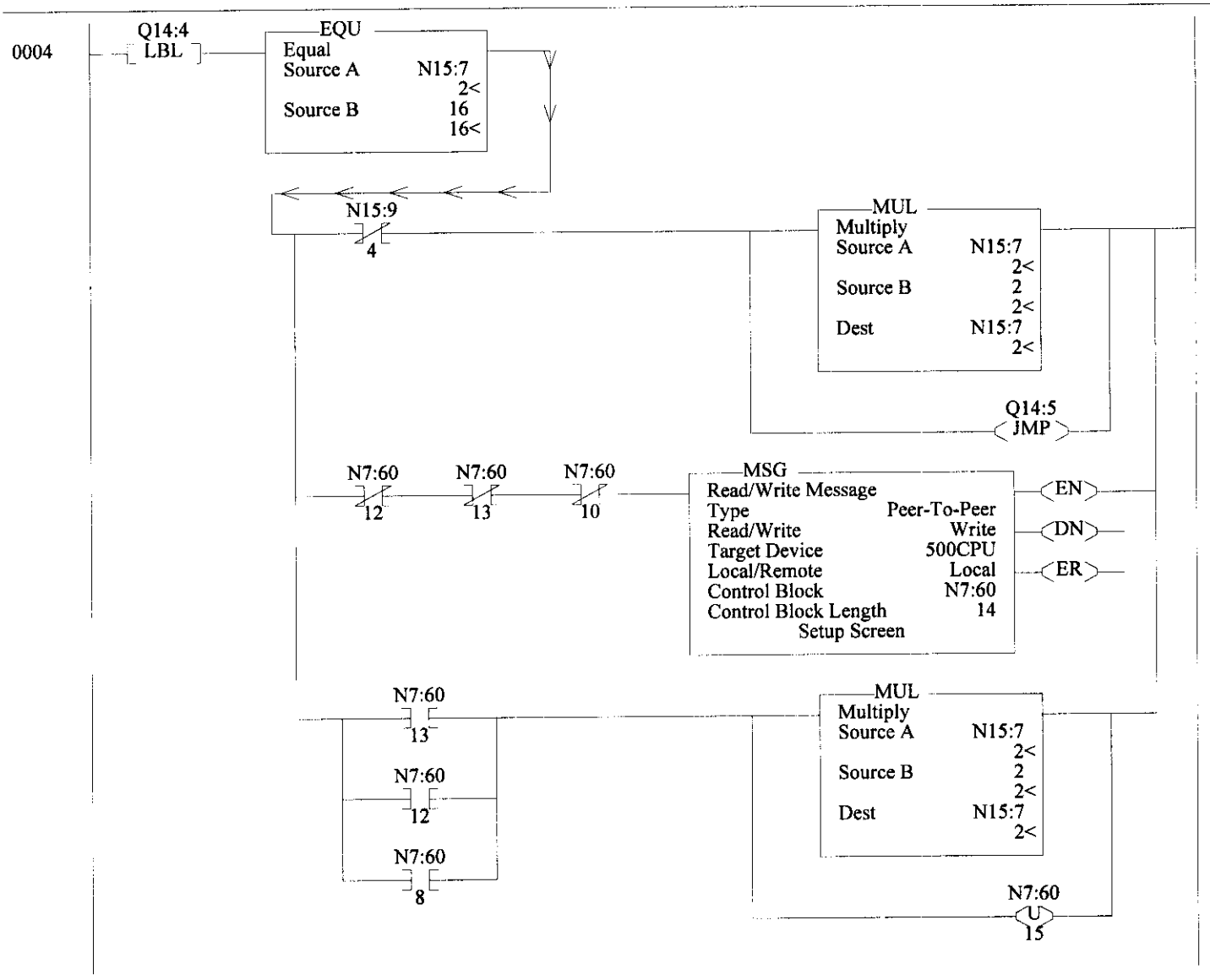

LAD 14 - --- Total Rungs in File = 14

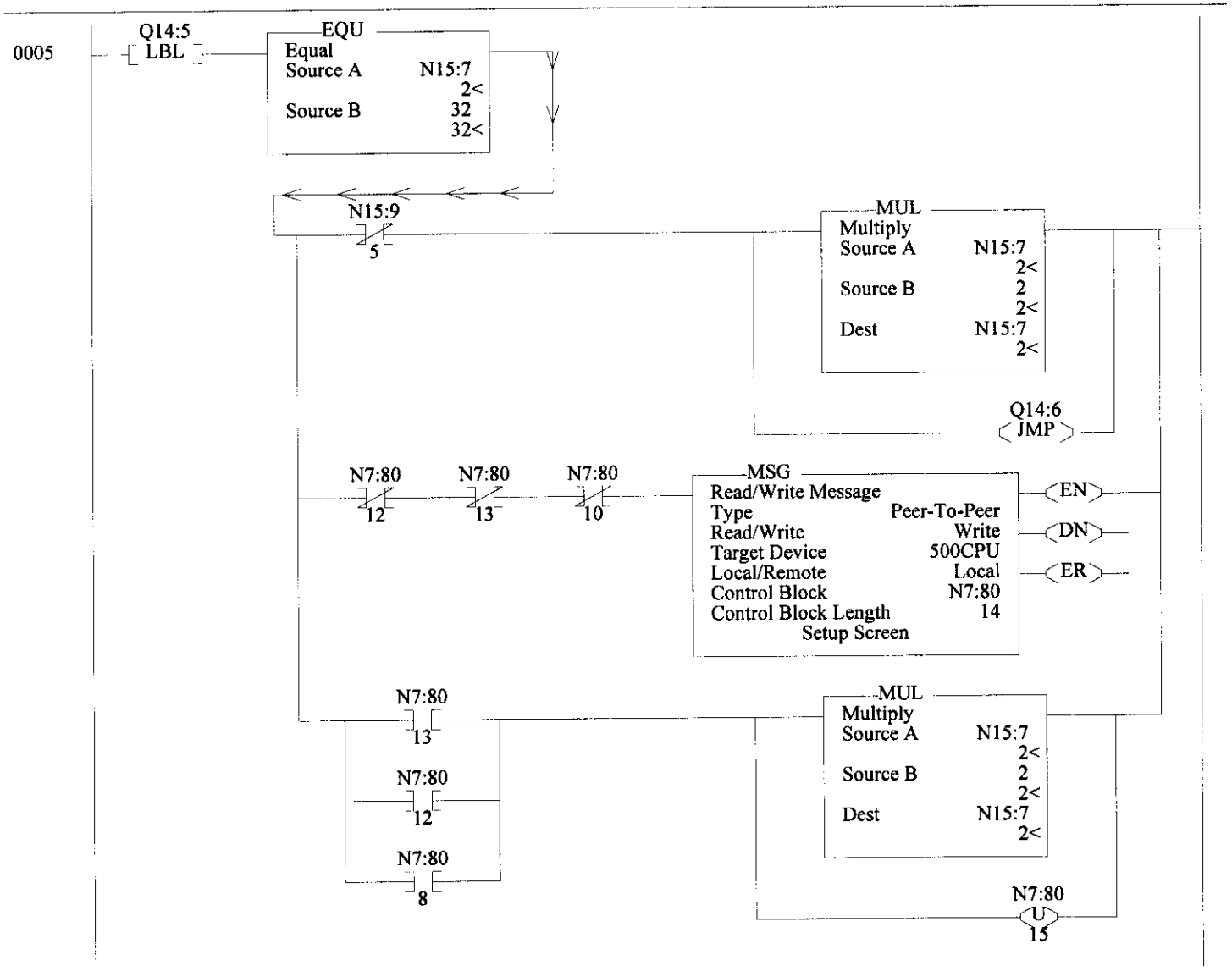

LAD 14 - --- Total Rungs in File = 14

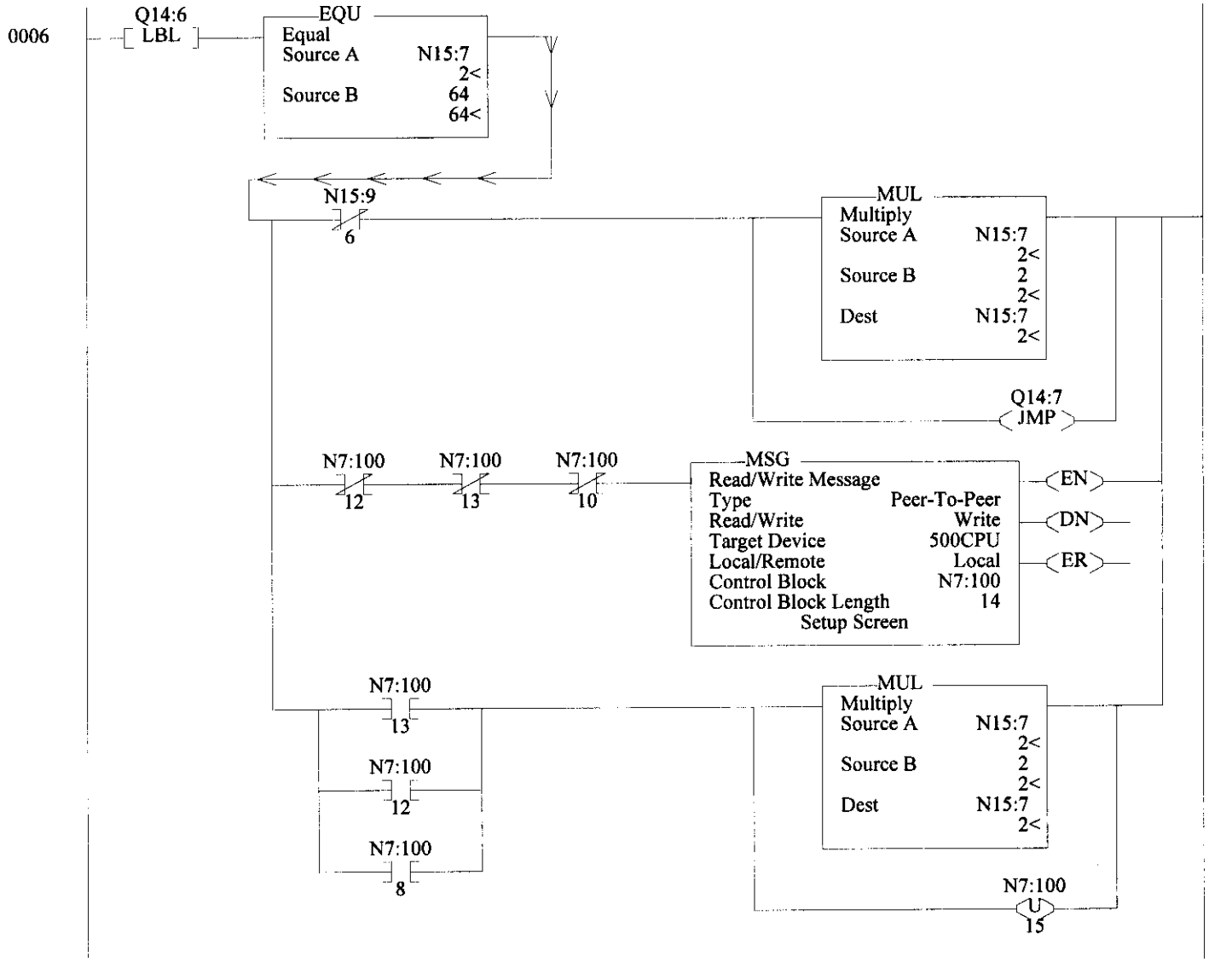

LAD 14 - --- Total Rungs in File = 14

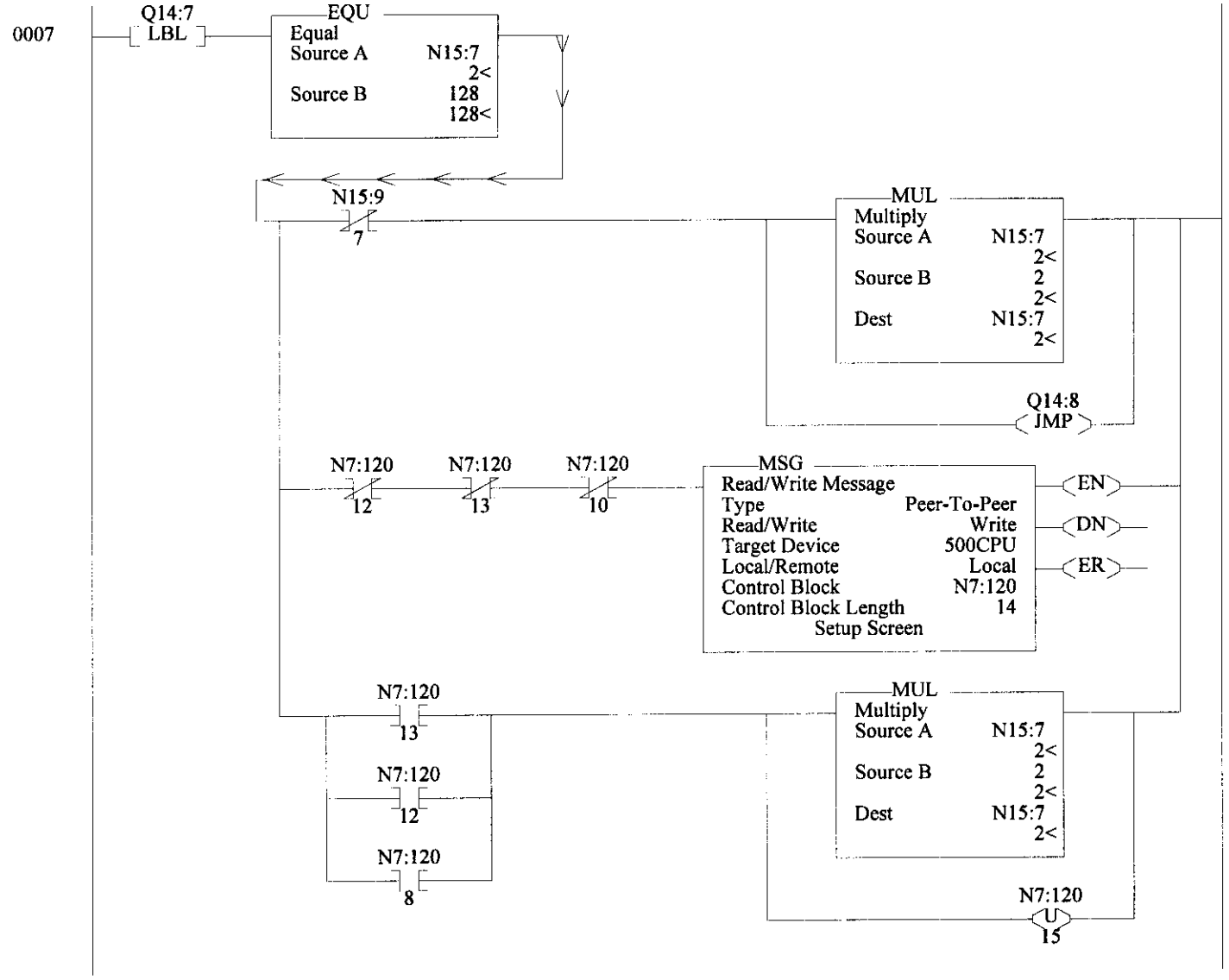

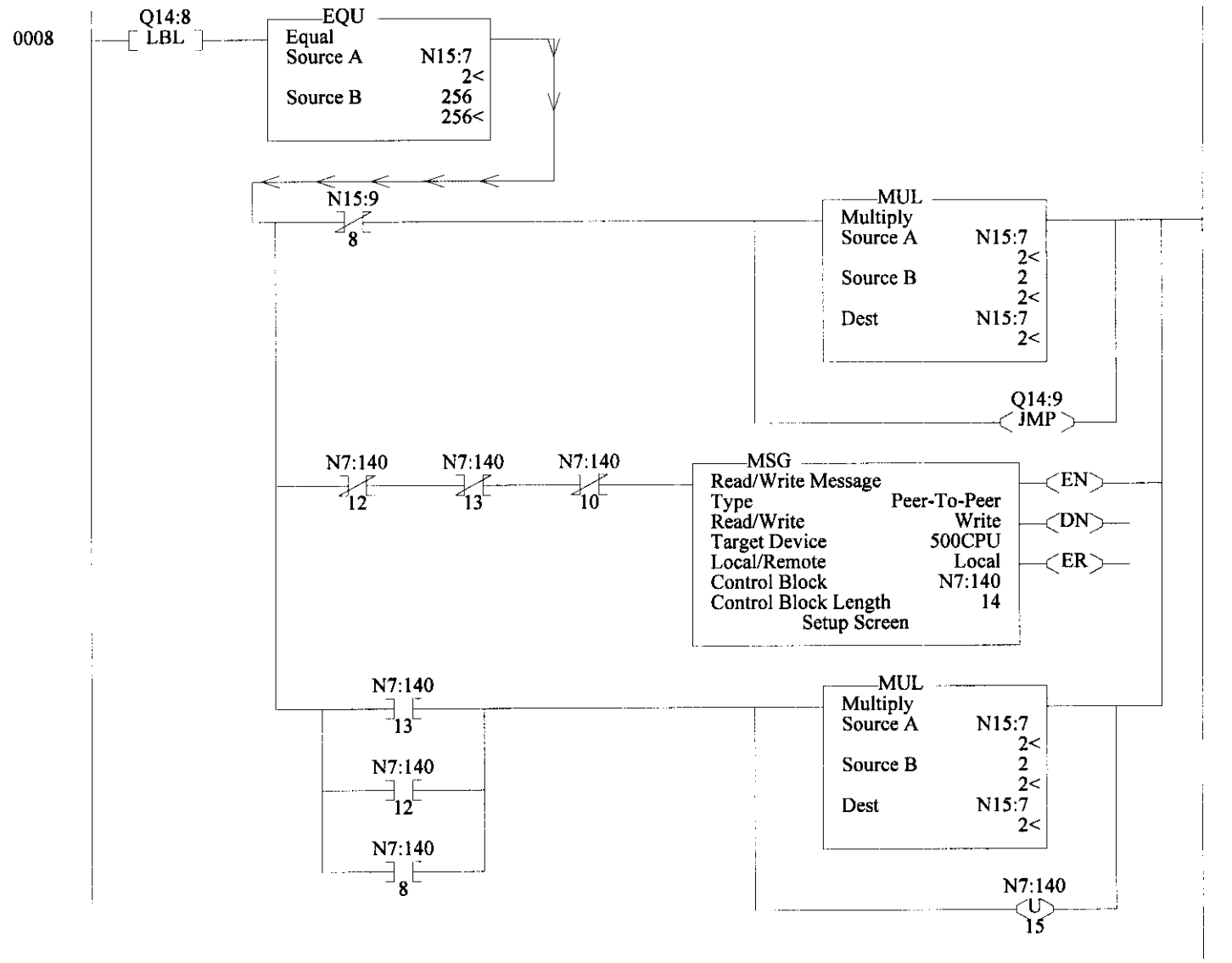
0008
Q14:8
LBL
EQU
Equal
Source A N15:7
2<
Source B 256
256<
N15:9
8
MUL
Multiply
Source A N15:7
2<
Source B 2
2<
Dest N15:7
2<
Q14:9
JMP
N7:140
12
N7:140
13
N7:140
10
MSG
Read/Write Message
Type Peer-To-Peer
Read/Write Write
Target Device 500CPU
Local/Remote Local
Control Block N7:140
Control Block Length 14
Setup Screen
EN
DN
ER
N7:140
13
N7:140
12
N7:140
8
MUL
Multiply
Source A N15:7
2<
Source B 2
2<
Dest N15:7
2<
N7:140
U
15

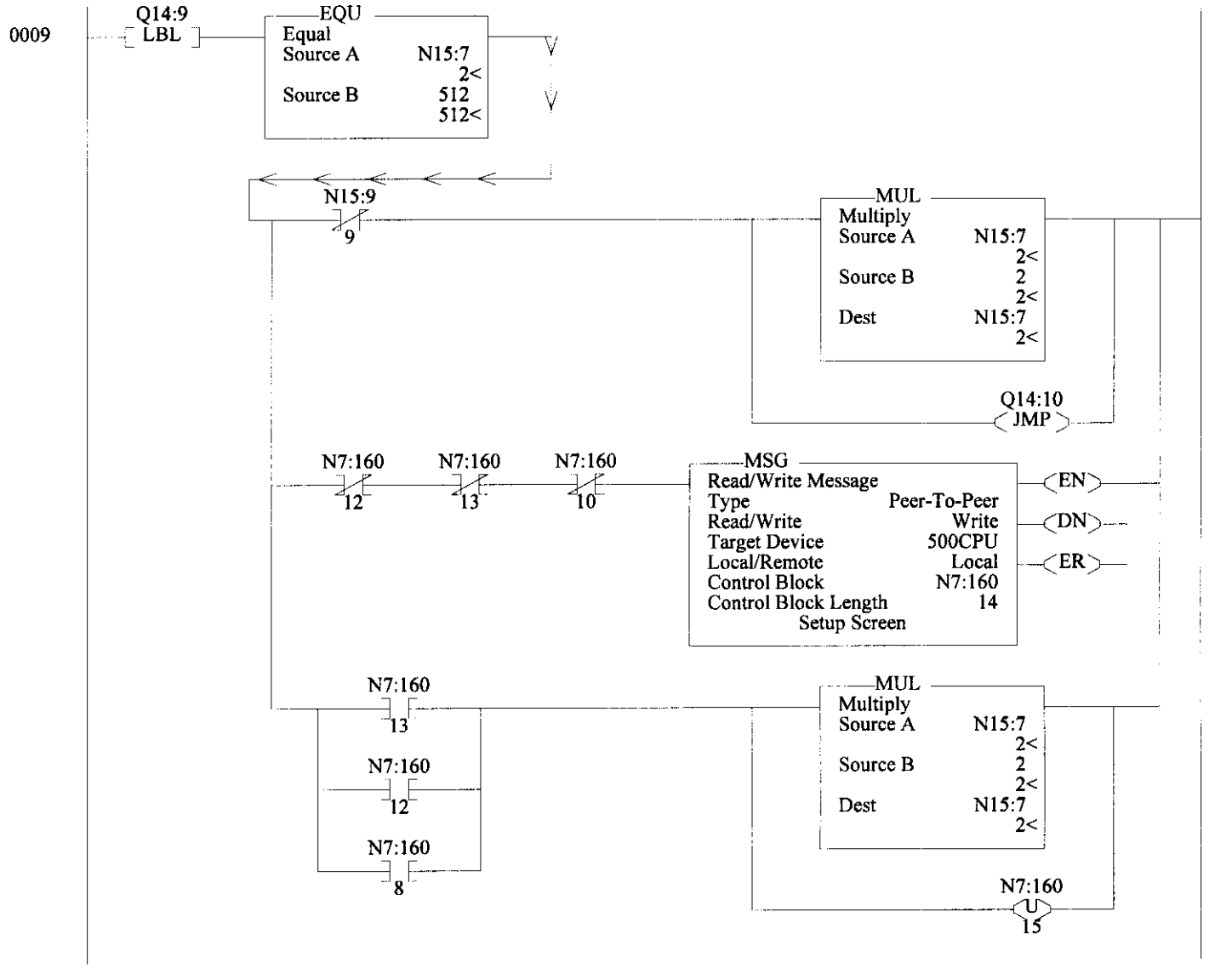
0009
Q14:9
LBL
EQU
Equal
Source A N15:7
2<
Source B 512
512<
N15:9
9
MUL
Multiply
Source A N15:7
2<
Source B 2
2<
Dest N15:7
2<
Q14:10
JMP
N7:160
12
N7:160
13
N7:160
10
MSG
Read/Write Message
Type Peer-To-Peer
Read/Write Write
Target Device 500CPU
Local/Remote Local
Control Block N7:160
Control Block Length 14
Setup Screen
EN
DN
ER
N7:160
13
N7:160
12
N7:160
8
MUL
Multiply
Source A N15:7
2<
Source B 2
2<
Dest N15:7
2<
N7:160
U
15

LAD 14 - --- Total Rungs in File = 14

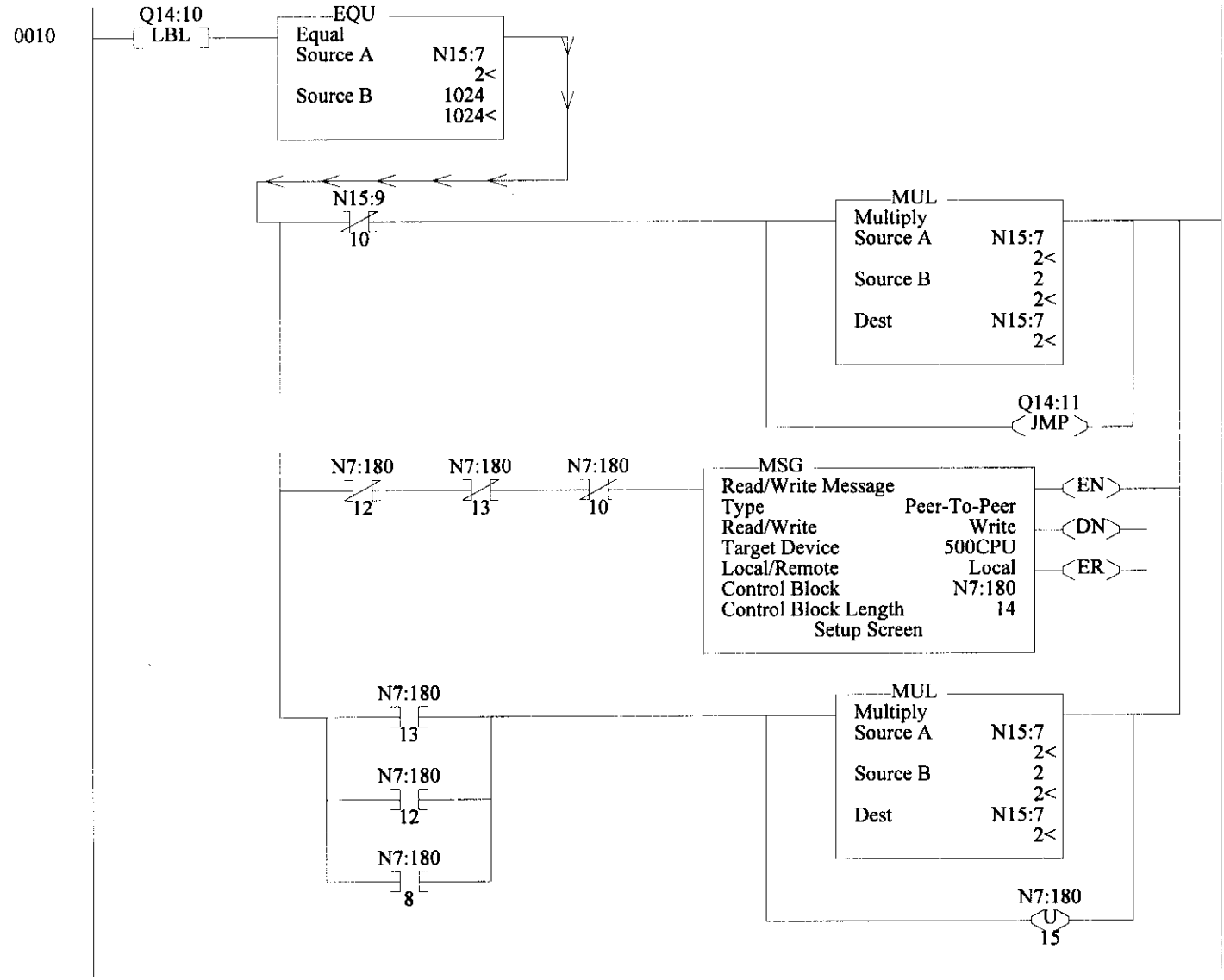

LAD 14 - --- Total Rungs in File = 14

0011

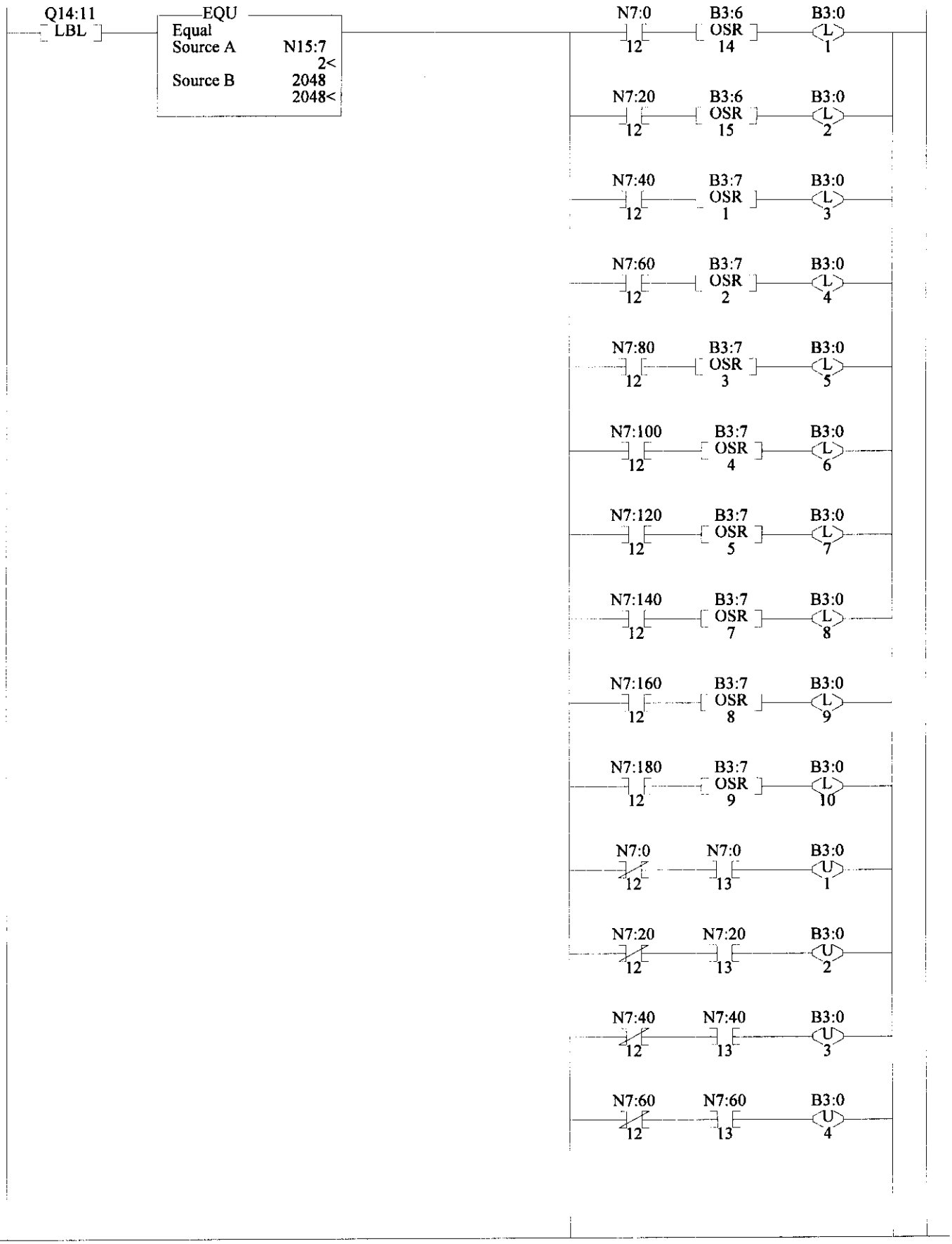

LAD 14 - --- Total Rungs in File = 14

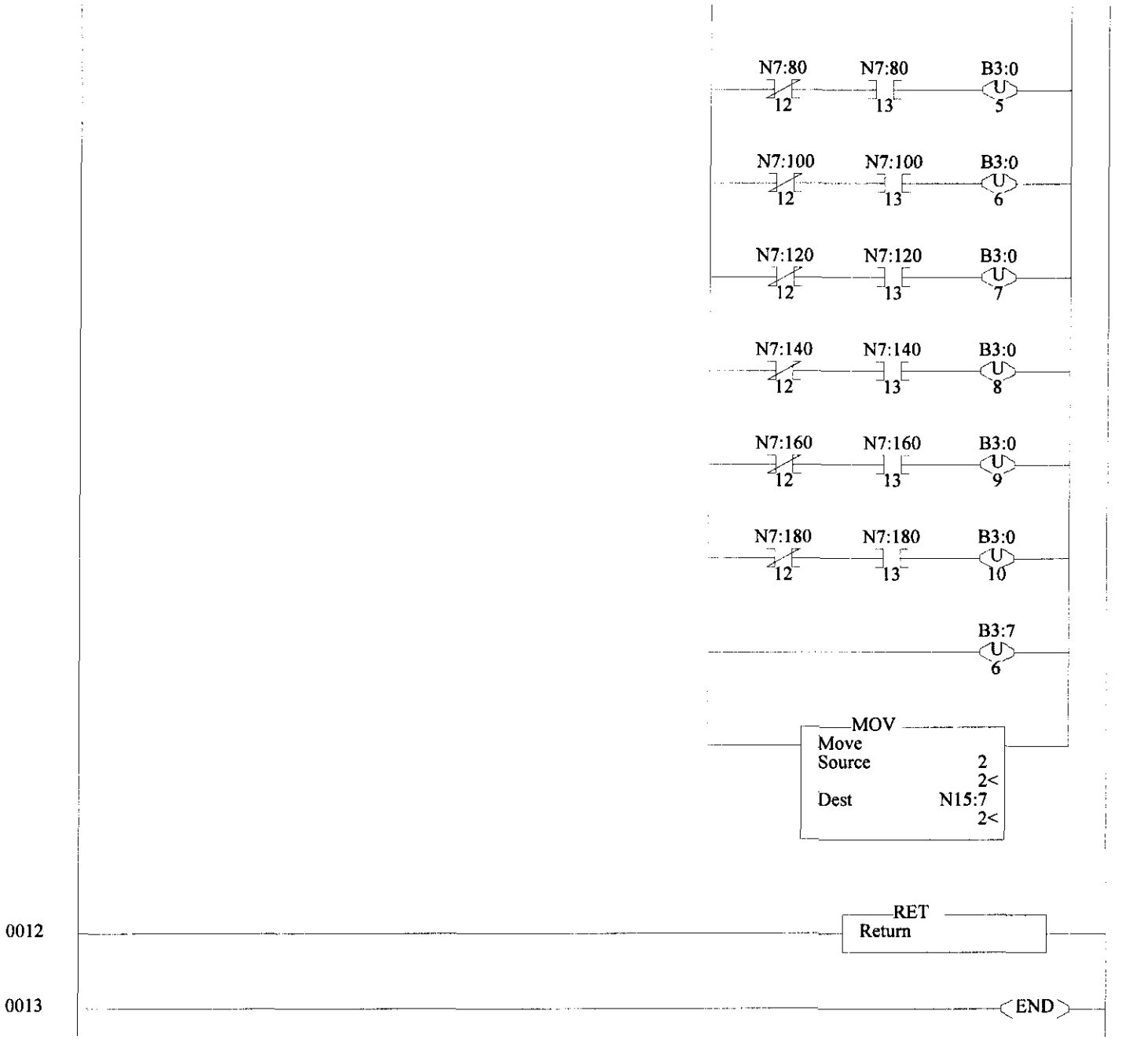

0000 SBR Subroutine — N20:34 (2) — N20:34 (0) — TON Timer On Delay, Timer T4:34, Time Base 1.0, Preset 1800<, Accum 0< — EN, DN

EMERG SKID SHUTDOWN AND JR-I NOT IN PRIME POSITION, START 30 MIN TIMER

0001 N20:35 (2) — N20:35 (0) — TON Timer On Delay, Timer T4:35, Time Base 1.0, Preset 1800<, Accum 0< — EN, DN

0002 N20:36 (2) — N20:36 (0) — TON Timer On Delay, Timer T4:36, Time Base 1.0, Preset 1800<, Accum 0< — EN, DN

BY105 SHUTDOWN 30MIN TIMER TIMEOUT

0003 N20:37 (2) — N20:37 (0) — TON Timer On Delay, Timer T4:37, Time Base 1.0, Preset 1800<, Accum 0< — EN, DN

BY106 SHUTDOWN 30MIN TIMER TIMEOUT

0004 N20:38 (2) — N20:38 (0) — TON Timer On Delay, Timer T4:38, Time Base 1.0, Preset 1800<, Accum 0< — EN, DN

0005 N20:39 (2) — N20:39 (0) — TON Timer On Delay, Timer T4:39, Time Base 1.0, Preset 1800<, Accum 0< — EN, DN

0006 N20:40 (2) — N20:40 (0) — TON Timer On Delay, Timer T4:40, Time Base 1.0, Preset 1800<, Accum 0< — EN, DN

0007 N20:41 (2) — N20:41 (0) — TON Timer On Delay, Timer T4:41, Time Base 1.0, Preset 1800<, Accum 0< — EN, DN

LAD 15 - --- Total Rungs in File = 16

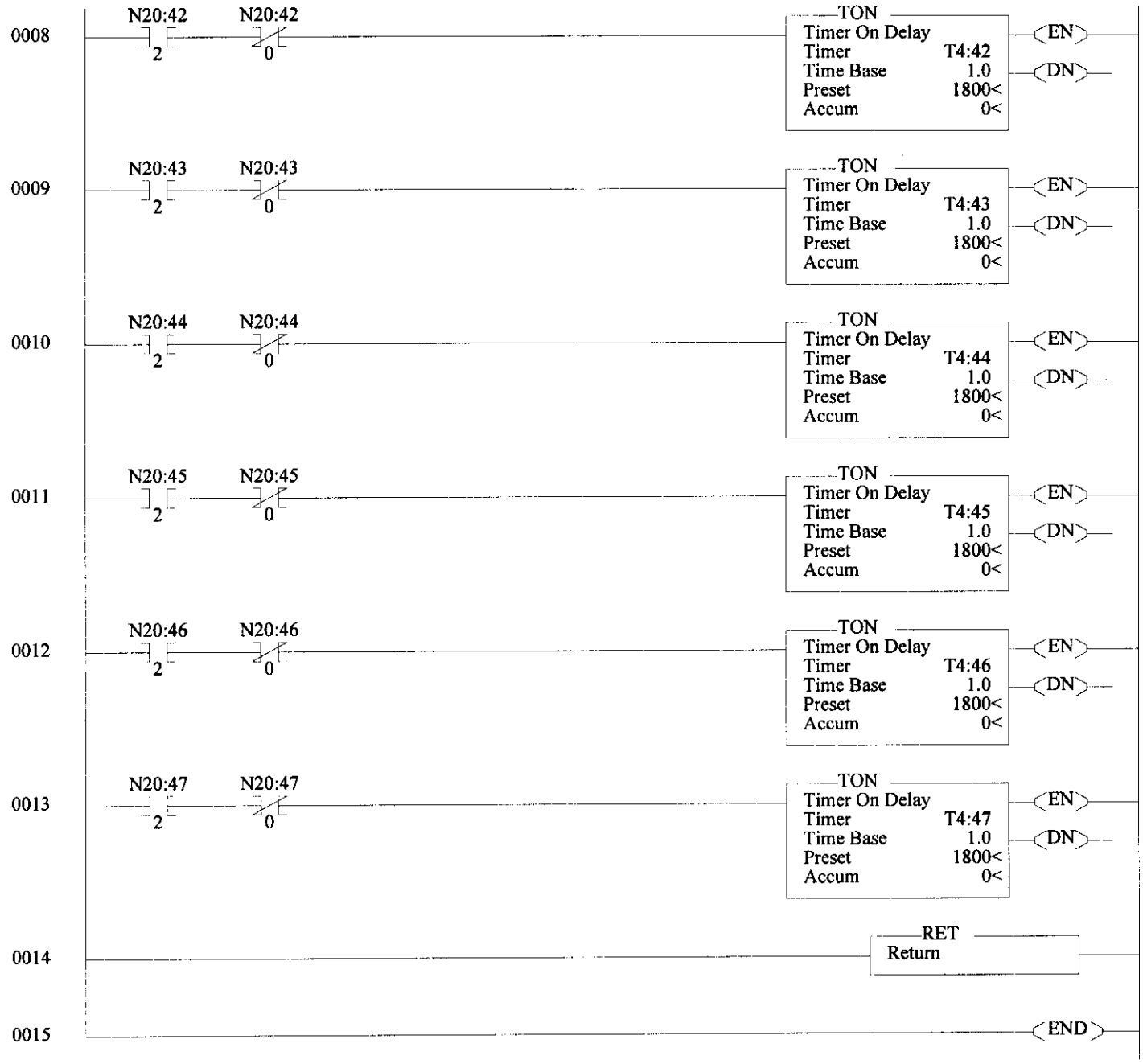

LAD 16 - --- Total Rungs in File = 6

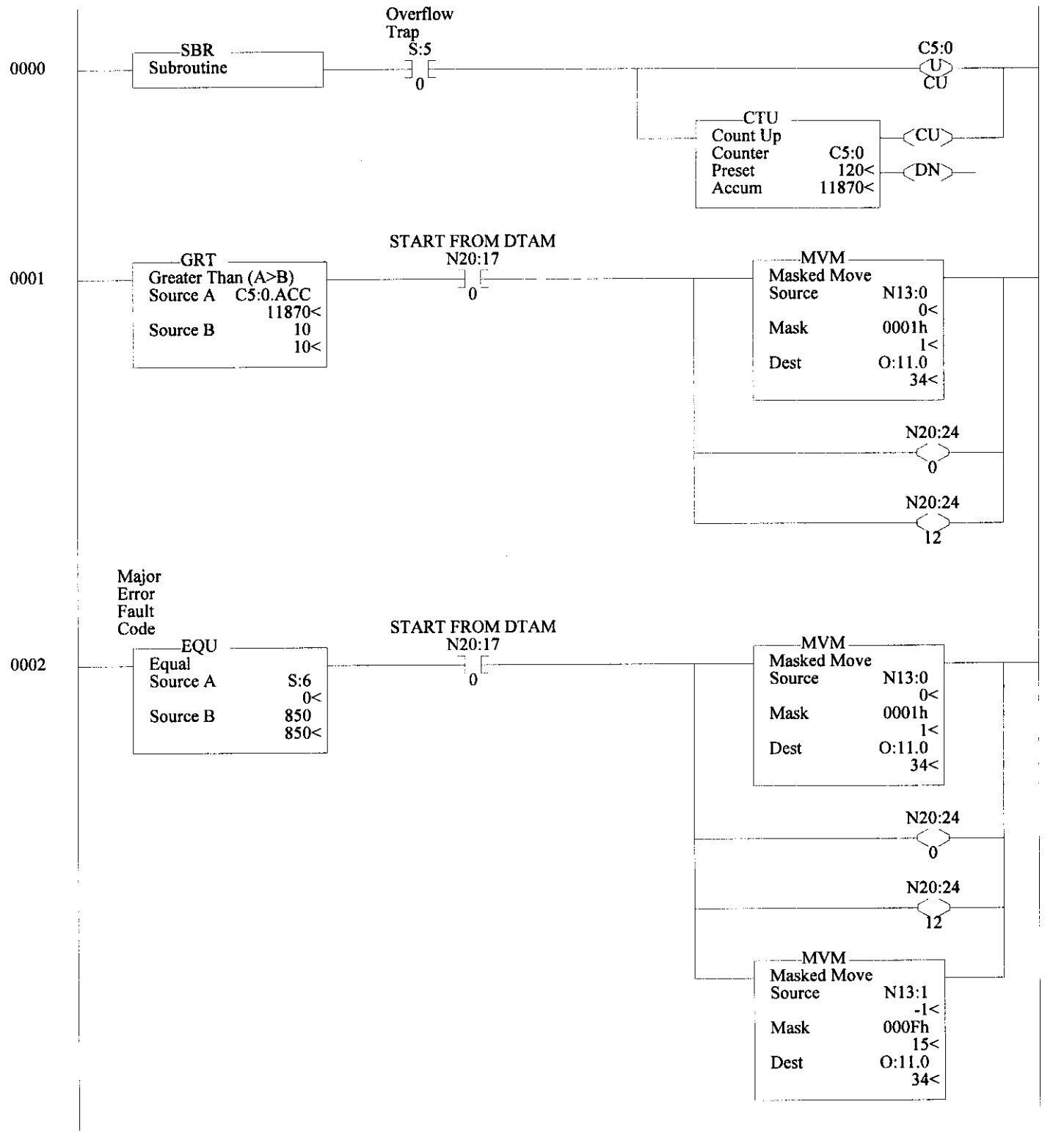

LAD 16 - --- Total Rungs in File = 6

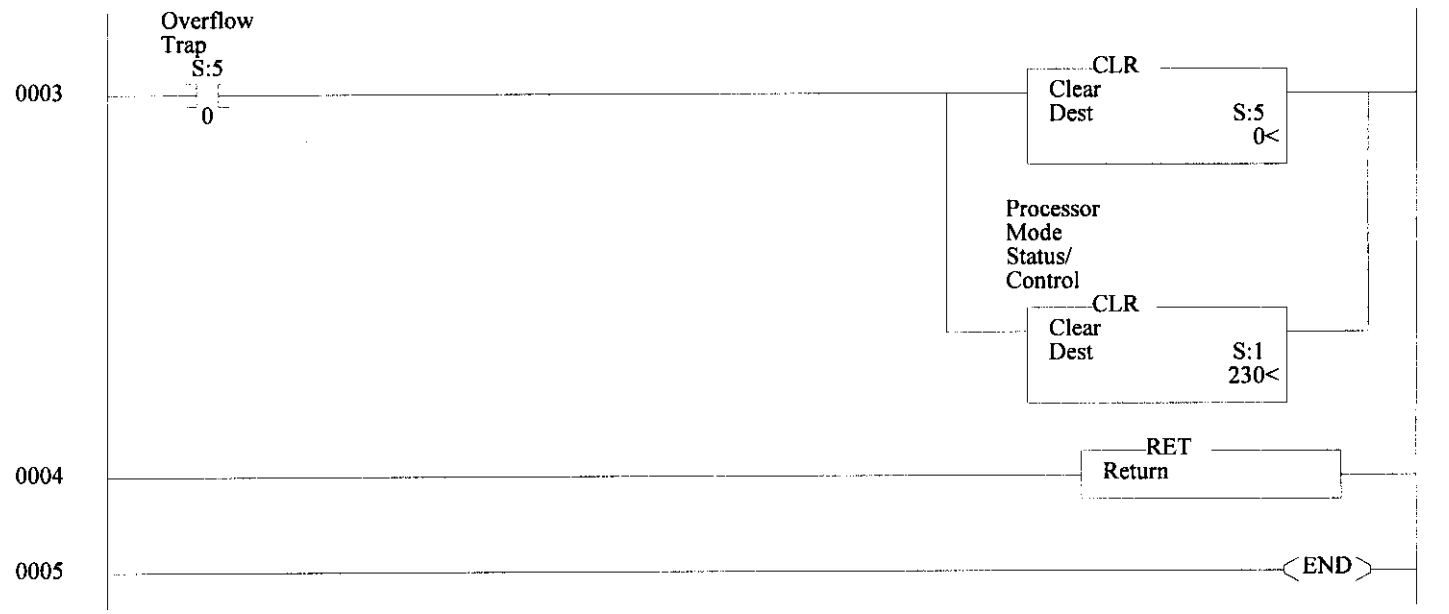

LAD 17 - --- Total Rungs in File = 65

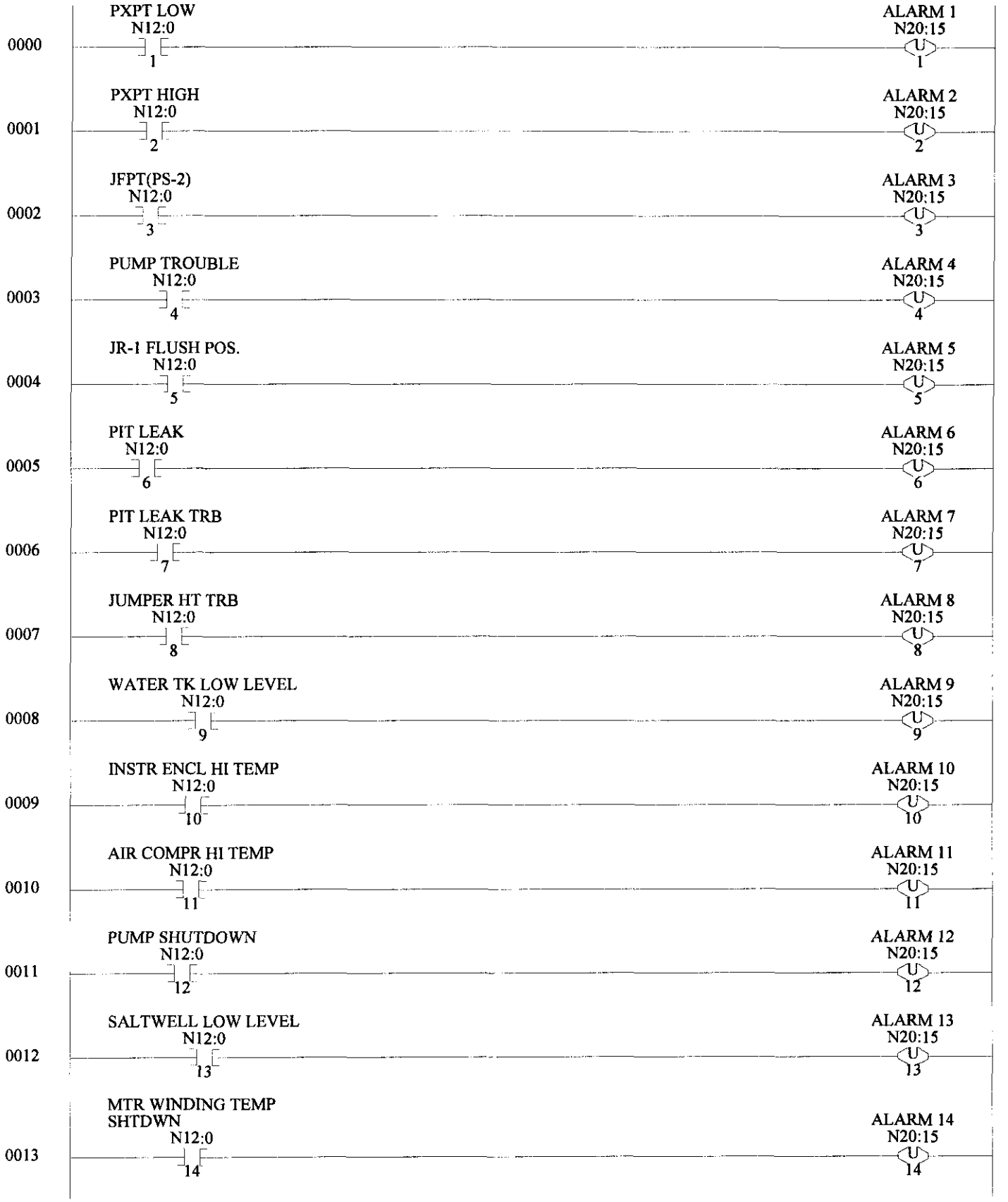

0014	DH485 FAILURE N12:0 15	ALARM 15 N20:15 U 15
0015	JFPT SIGNAL LOSS N12:1 0	ALARM 16 N20:16 U 0
0016	N12:1 1	ALARM 17 N20:16 U 1
0017	LK DET 1 N12:1 2	ALARM 18 N20:16 U 2
0018	LK DET 1 TRB N12:1 3	ALARM 19 N20:16 U 3
0019	N12:1 4	ALARM 20 N20:16 U 4
0020	BY106 FLUSH POS N12:1 5	ALARM 21 N20:16 U 5
0021	N12:1 6	ALARM 22 N20:16 U 6
0022	BX DCRT N12:1 7	ALARM 23 N20:16 U 7
0023	N12:1 8	ALARM 24 N20:16 U 8
0024	N12:1 9	ALARM 25 N20:16 U 9
0025	N12:1 10	ALARM 26 N20:16 U 10
0026	N12:1 11	ALARM 27 N20:16 U 11
0027	N12:1 12	ALARM 28 N20:16 U 12

LAD 17 - --- Total Rungs in File = 65

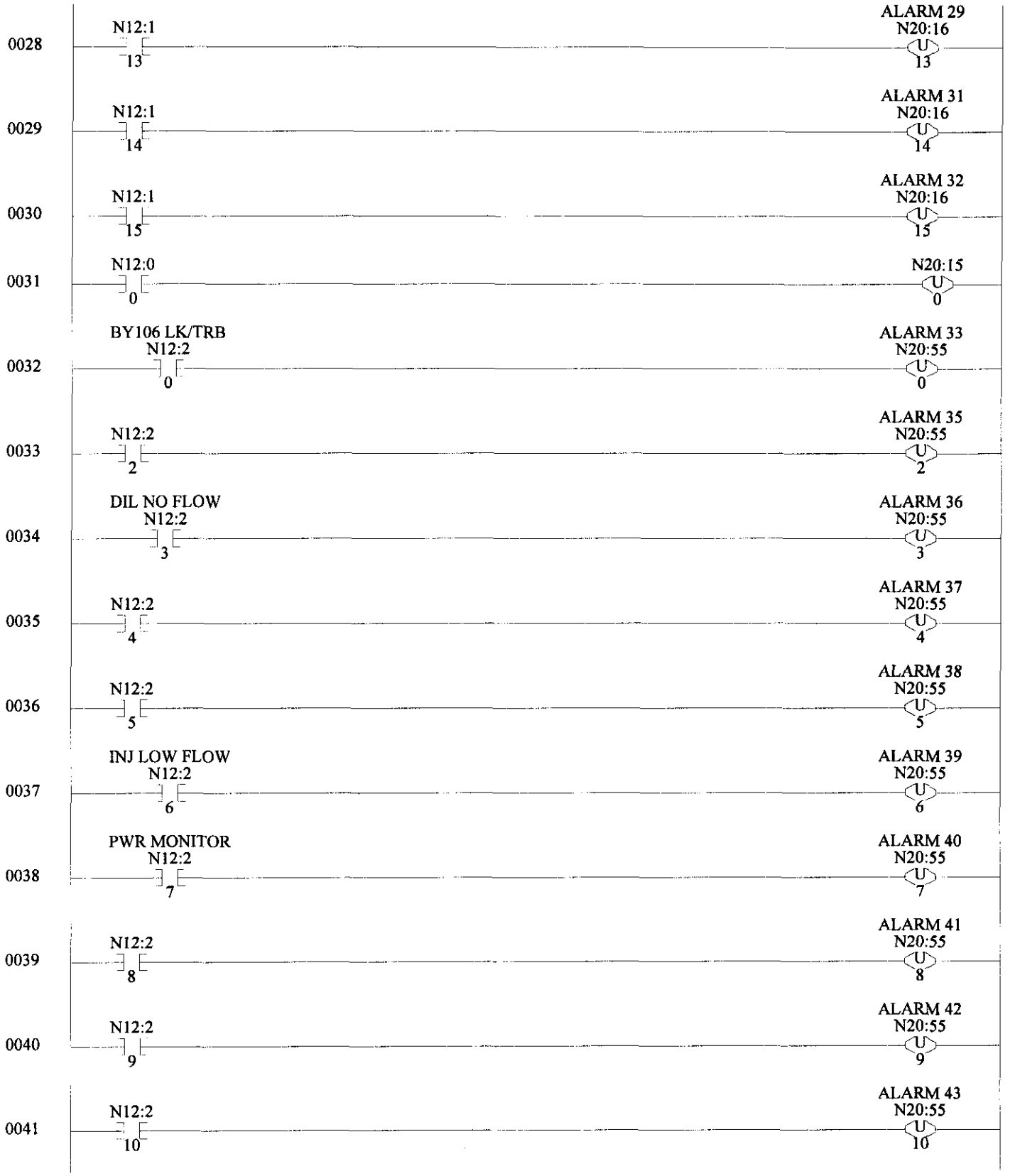

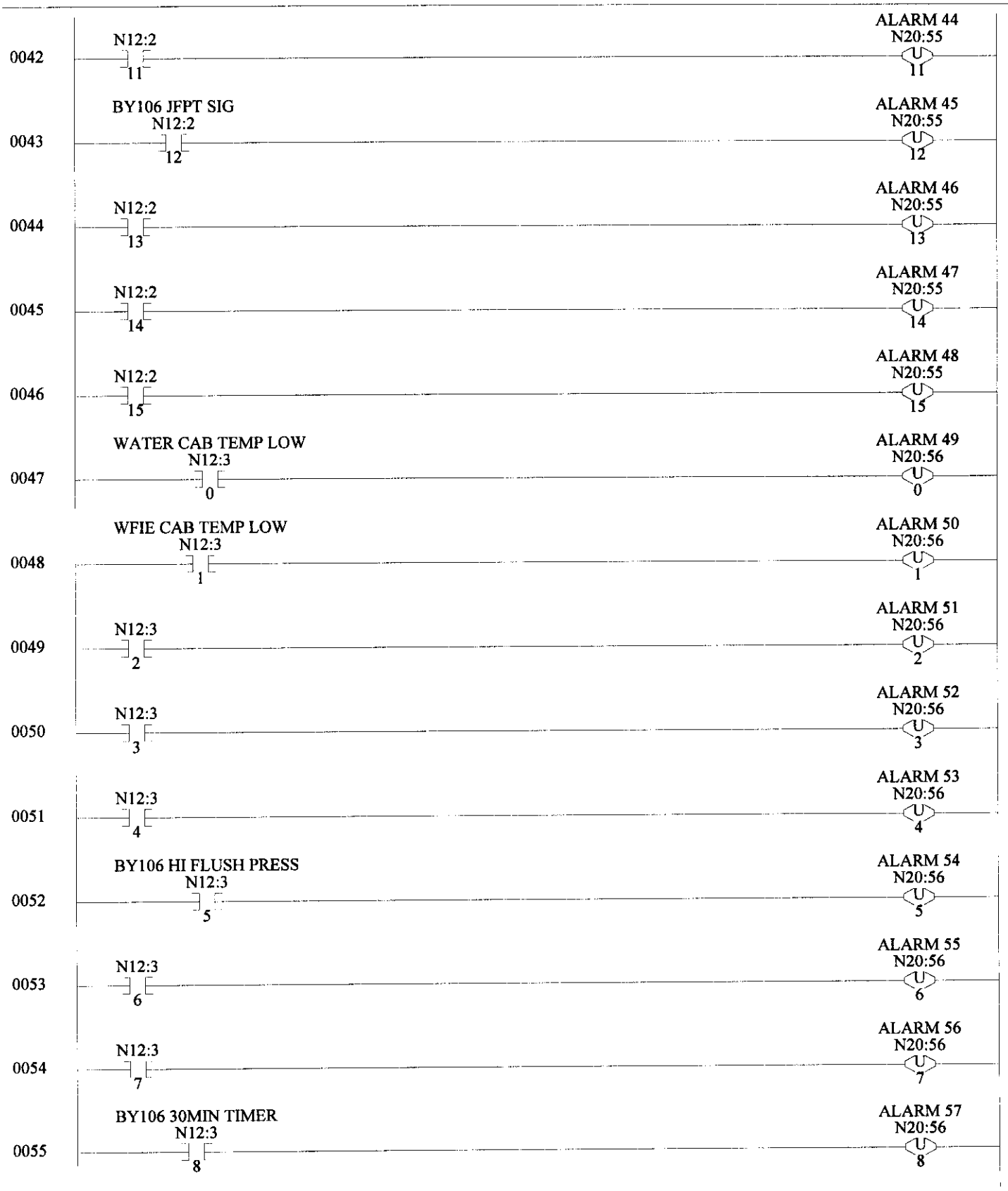
0042
N12:2
11
ALARM 44
N20:55
U
11
0043
BY106 JFPT SIG
N12:2
12
ALARM 45
N20:55
U
12
0044
N12:2
13
ALARM 46
N20:55
U
13
0045
N12:2
14
ALARM 47
N20:55
U
14
0046
N12:2
15
ALARM 48
N20:55
U
15
0047
WATER CAB TEMP LOW
N12:3
0
ALARM 49
N20:56
U
0
0048
WFIE CAB TEMP LOW
N12:3
1
ALARM 50
N20:56
U
1
0049
N12:3
2
ALARM 51
N20:56
U
2
0050
N12:3
3
ALARM 52
N20:56
U
3
0051
N12:3
4
ALARM 53
N20:56
U
4
0052
BY106 HI FLUSH PRESS
N12:3
5
ALARM 54
N20:56
U
5
0053
N12:3
6
ALARM 55
N20:56
U
6
0054
N12:3
7
ALARM 56
N20:56
U
7
0055
BY106 30MIN TIMER
N12:3
8
ALARM 57
N20:56
U
8

LAD 17 - --- Total Rungs in File = 65

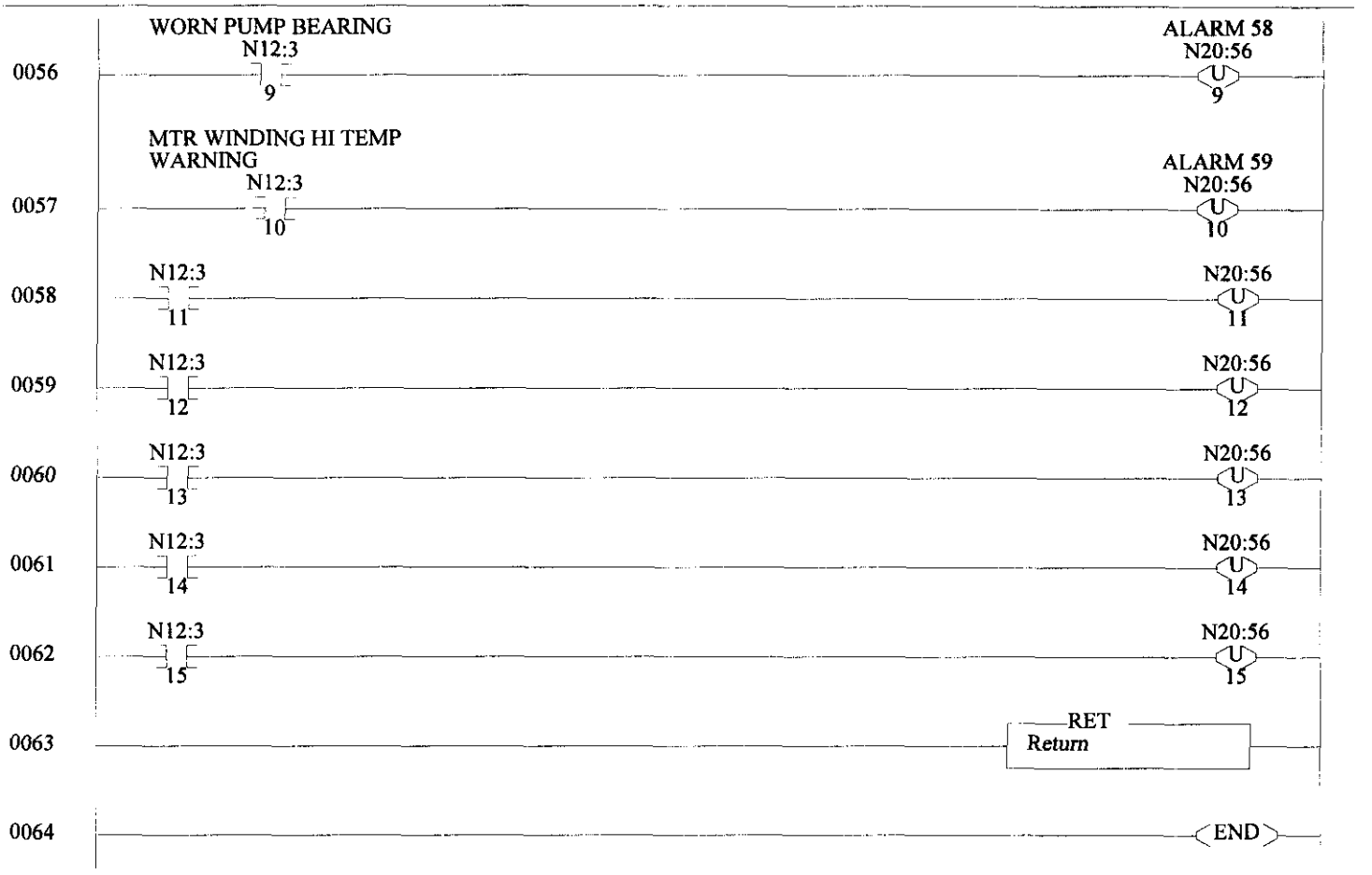

LAD 18 - --- Total Rungs in File = 70

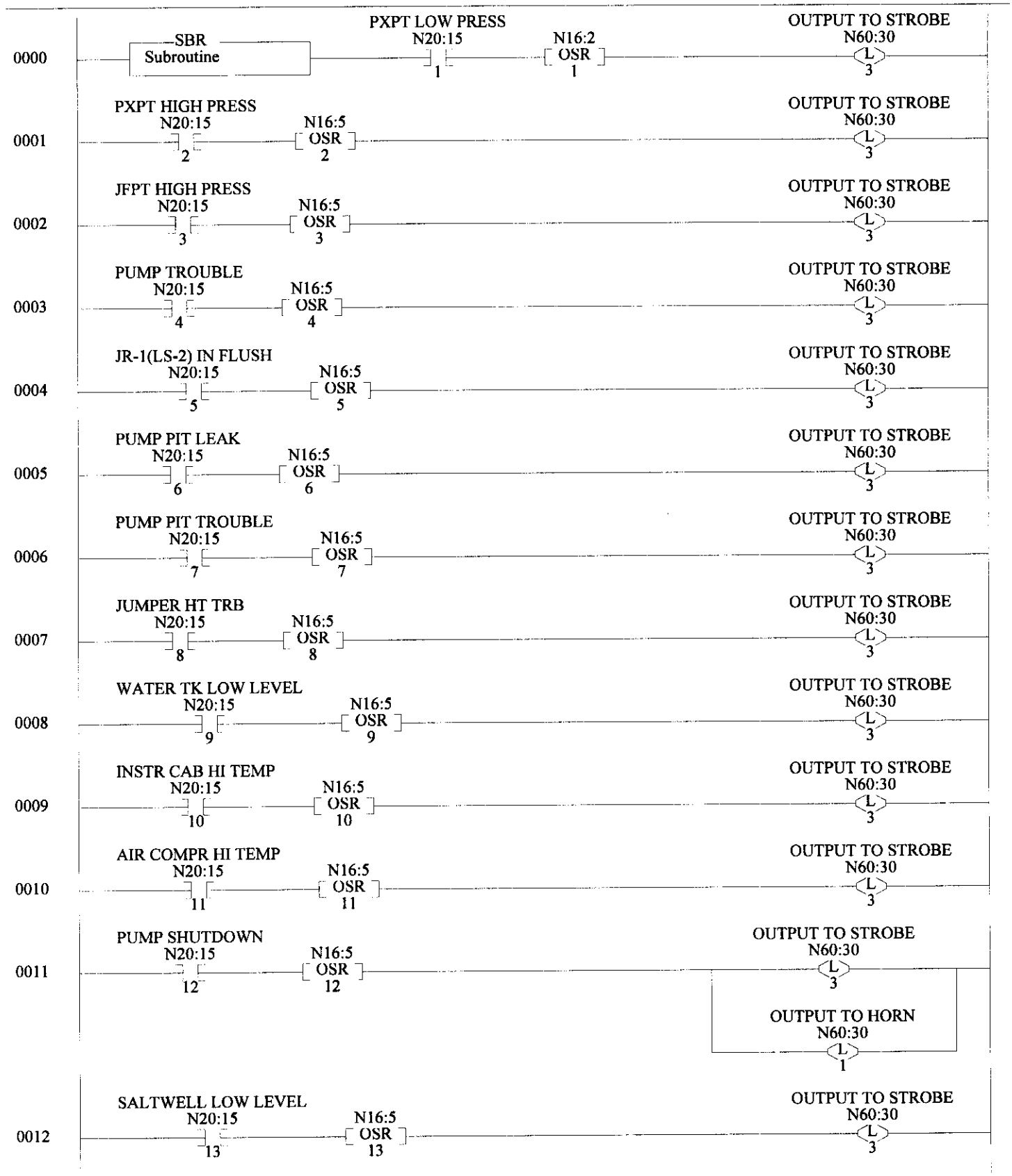

LAD 18 - --- Total Rungs in File = 70

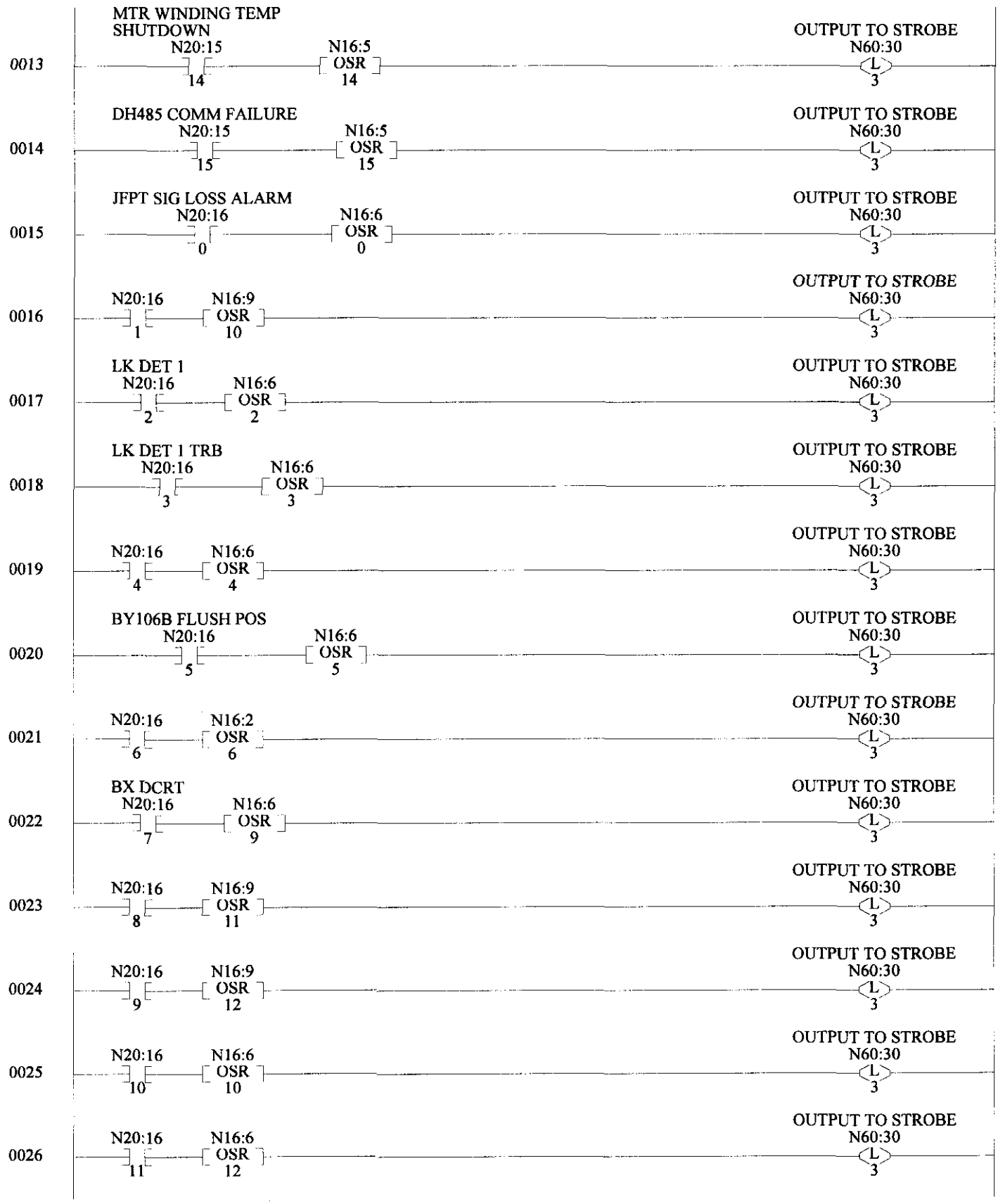

0027 N20:16/12 N16:6 OSR 14 — OUTPUT TO STROBE N60:30 L 3

0028 N20:16/13 N16:7 OSR 0 — OUTPUT TO STROBE N60:30 L 3

0029 N20:16/14 N16:9 OSR 13 — OUTPUT TO STROBE N60:30 L 3

0030 N20:16/15 N16:9 OSR 14 — OUTPUT TO STROBE N60:30 L 3

0031 N20:15/0 N16:7 OSR 7 — OUTPUT TO STROBE N60:30 L 3

0032 BY106 LK/TRB N20:55/0 N16:7 OSR 10 — OUTPUT TO STROBE N60:30 L 3

0033 N20:55/1 N16:7 OSR 11 — OUTPUT TO STROBE N60:30 L 3

0034 N20:55/2 N16:7 OSR 12 — OUTPUT TO STROBE N60:30 L 3

0035 DIL NO FLOW N20:55/3 N16:7 OSR 13 — OUTPUT TO STROBE N60:30 L 3

0036 N20:55/4 N16:7 OSR 14 — OUTPUT TO STROBE N60:30 L 3

0037 N20:55/5 N16:7 OSR 15 — OUTPUT TO STROBE N60:30 L 3

0038 INJ WTR LOW FLOW N20:55/6 N16:8 OSR 0 — OUTPUT TO STROBE N60:30 L 3

0039 PWR MONITOR N20:55/7 N16:8 OSR 1 — OUTPUT TO STROBE N60:30 L 3

0040 N20:55/8 N16:8 OSR 2 — OUTPUT TO STROBE N60:30 L 3

LAD 18 - --- Total Rungs in File = 70

0041 N20:55/9 — N16:8 OSR 3 — OUTPUT TO STROBE N60:30 (L) 3

0042 N20:55/10 — N16:8 OSR 4 — OUTPUT TO STROBE N60:30 (L) 3

0043 N20:55/11 — N16:8 OSR 5 — OUTPUT TO STROBE N60:30 (L) 3

0044 BY106 JFPT SIG N20:55/12 — N16:8 OSR 6 — OUTPUT TO STROBE N60:30 (L) 3

0045 N20:55/13 — N16:8 OSR 7 — OUTPUT TO STROBE N60:30 (L) 3

0046 N20:55/14 — N16:8 OSR 8 — OUTPUT TO STROBE N60:30 (L) 3

0047 N20:55/15 — N16:9 OSR 15 — OUTPUT TO STROBE N60:30 (L) 3

0048 WATER CAB LOW TEMP N20:56/0 — N16:10 OSR 0 — OUTPUT TO STROBE N60:30 (L) 3

0049 WFIE CAB LOW TEMP N20:56/1 — N16:10 OSR 1 — OUTPUT TO STROBE N60:30 (L) 3

0050 N20:56/2 — N16:10 OSR 2 — OUTPUT TO STROBE N60:30 (L) 3

0051 N20:56/3 — N16:8 OSR 9 — OUTPUT TO STROBE N60:30 (L) 3

0052 N20:56/4 — N16:8 OSR 10 — OUTPUT TO STROBE N60:30 (L) 3

0053 BY106 HI FLUSH PRESS N20:56/5 — N16:10 OSR 3 — OUTPUT TO STROBE N60:30 (L) 3

0054 N20:56/6 — N16:8 OSR 11 — OUTPUT TO STROBE N60:30 (L) 3

0055 N20:56 7 — N16:8 OSR 12 — OUTPUT TO STROBE N60:30 L 3

0056 BY106 30 MIN TIMER N20:56 8 — N16:8 OSR 13 — OUTPUT TO STROBE N60:30 L 3

0057 WORN BEARING N20:56 9 — N16:8 OSR 14 — OUTPUT TO STROBE N60:30 L 3

0058 MTR WINDING HI TEMP WARNING N20:56 10 — N16:10 OSR 4 — OUTPUT TO STROBE N60:30 L 3

0059 N20:56 11 — N16:10 OSR 5 — OUTPUT TO STROBE N60:30 L 3

0060 N20:56 12 — N16:10 OSR 6 — OUTPUT TO STROBE N60:30 L 3

0061 N20:56 13 — N16:10 OSR 7 — OUTPUT TO STROBE N60:30 L 3

0062 N20:56 14 — N16:10 OSR 8 — OUTPUT TO STROBE N60:30 L 3

0063 N20:56 15 — N16:10 OSR 9 — OUTPUT TO STROBE N60:30 L 3

AMBER LIGHT CONTROL, LOW PRESS. TRANSFER SHUTDOWN

0064 CHECK IF PXPT IS LESS THAN 30PSIG — LES Less Than (A<B) Source A N60:18 3312< Source B 4588 4588< — OUTPUT TO AMBER LAMP N60:31 1

RED LIGHT CONTROL, MR-1 POWER ON

0065 MR-1 CONTACT N60:31 6 — OUTPUT TO RED LAMP N60:31 0

LAD 18 - --- Total Rungs in File = 70

BLUE LIGHT CONTROL, PS-2

0066

CHECK IF JFPT IS GRT THAN 15PSIG

GRT
Greater Than (A>B)
Source A N60:17
4134<
Source B 9830
9830<

OUTPUT TO BLUE LAMP
N60:31
3

GREEN LIGHT CONTROL, MR-1 POWER OFF

0067

MR-1 CONTACT
N60:31
6

OUTPUT TO GREEN LAMP
N60:31
5

0068

RET
Return

0069

END

LAD 19 - --- Total Rungs in File = 9

0000

SBR
Subroutine

COP
Copy File
Source #N60:4
Dest #O:2.0
Length 2

MOVE OUTPUT TO MODULE 2 FOR DOV

0001

SGT LOW
N20:24
13

MOV
Move
Source N13:0
0<
Dest O:2.0
0<

MOV
Move
Source N13:0
0<
Dest N20:23
0<

MOVE OUTPUTS TO MODULE 6

0002

MVM
Masked Move
Source N60:20
2<
Mask 003Fh
63<
Dest O:6.0
2<

MOVE OUTPUTS TO MODULE 8

0003

MVM
Masked Move
Source N60:28
2048<
Mask 003Fh
63<
Dest O:8.0
0<

LAD 19 - --- Total Rungs in File = 9

MOVE OUTPUTS TO MODULE 9

0004

MVM
Masked Move
Source N60:29
2752<
Mask 003Fh
63<
Dest O:9.0
0<

MOVE OUTPUTS TO MODULE 10

0005

MVM
Masked Move
Source N60:30
1480<
Mask 003Fh
63<
Dest O:10.0
0<

MOVE OUTPUTS TO MODULE 11

0006

MVM
Masked Move
Source N60:31
290<
Mask 003Fh
63<
Dest O:11.0
34<

0007

RET
Return

0008

END

LAD 20 - --- Total Rungs in File = 12

0000

MOV
Move
Source N60:15
9823<
Dest N30:0
9823<

0001

SCP
Scale w/Parameters
Input N30:0
9823<
Input Min. 3277.0
3277.0<
Input Max. 16384.0
16384.0<
Scaled Min. 0.0
0.0<
Scaled Max. 14.0
14.0<
Output F8:20
6.991989<

CALCULATE TOTAL DILUTION RATIO

0002

MUL
Multiply
Source A F8:20
6.991989<
Source B N30:3
50<
Dest F8:21
3.495995<

CALCULATE TOTAL DILUTION RATIO

0003

DIV
Divide
Source A F8:21
3.495995<
Source B 100.0
100.0<
Dest F8:21
3.495995<

METERING PUMP FLOW RANGE WILL NOT BE LESS THAN MIN TOTAL DILUTION FLOW

0004

LES
Less Than (A<B)
Source A F8:21
3.495995<
Source B F8:23
3.0<

MOV
Move
Source F8:23
3.0<
Dest F8:21
3.495995<

METERING PUMP FLOW RANGE WILL NOT BE GREATER THAN MAX TOTAL DILUTION FLOW

0005

GRT
Greater Than (A>B)
Source A F8:21
3.495995<
Source B F8:24
4.5<

MOV
Move
Source F8:24
4.5<
Dest F8:21
3.495995<

METERING PUMP FLOW=DILUTION FLOW-INJECTION FLOW

0006

SUB
Subtract
Source A F8:21
3.495995<
Source B F90:3
0.3<
Dest F8:22
2.7<

IN METERING PUMP FLOW IS GREATER THAN 0.04GPM THEN TURN ON METERING PUMP

0007

LES
Less Than (A<B)
Source A F8:22
2.7<
Source B 0.04
0.04<

DIL CONTACTOR
N60:28
U
1

METERING PUMP FLOW MAX IS 4.0 GPM

0008

GEQ
Grtr Than or Eql (A>=B)
Source A F8:22
2.7<
Source B 4.0
4.0<

MOV
Move
Source 4.0
4.0<
Dest F8:22
2.7<

SCALING OUTPUT FOR METERING PUMP FLOW

0009

SCP
Scale w/Parameters

Input	F8:22
	2.7<
Input Min.	0.04
	0.04<
Input Max.	4.0
	4.0<
Scaled Min.	6242.0
	6242.0<
Scaled Max.	31208.0
	31208.0<
Output	N30:2
	23012<

0010

MOV
Move

Source	N30:2
	23012<
Dest	N60:5
	23012<

0011

END

LAD 21 - --- Total Rungs in File = 9

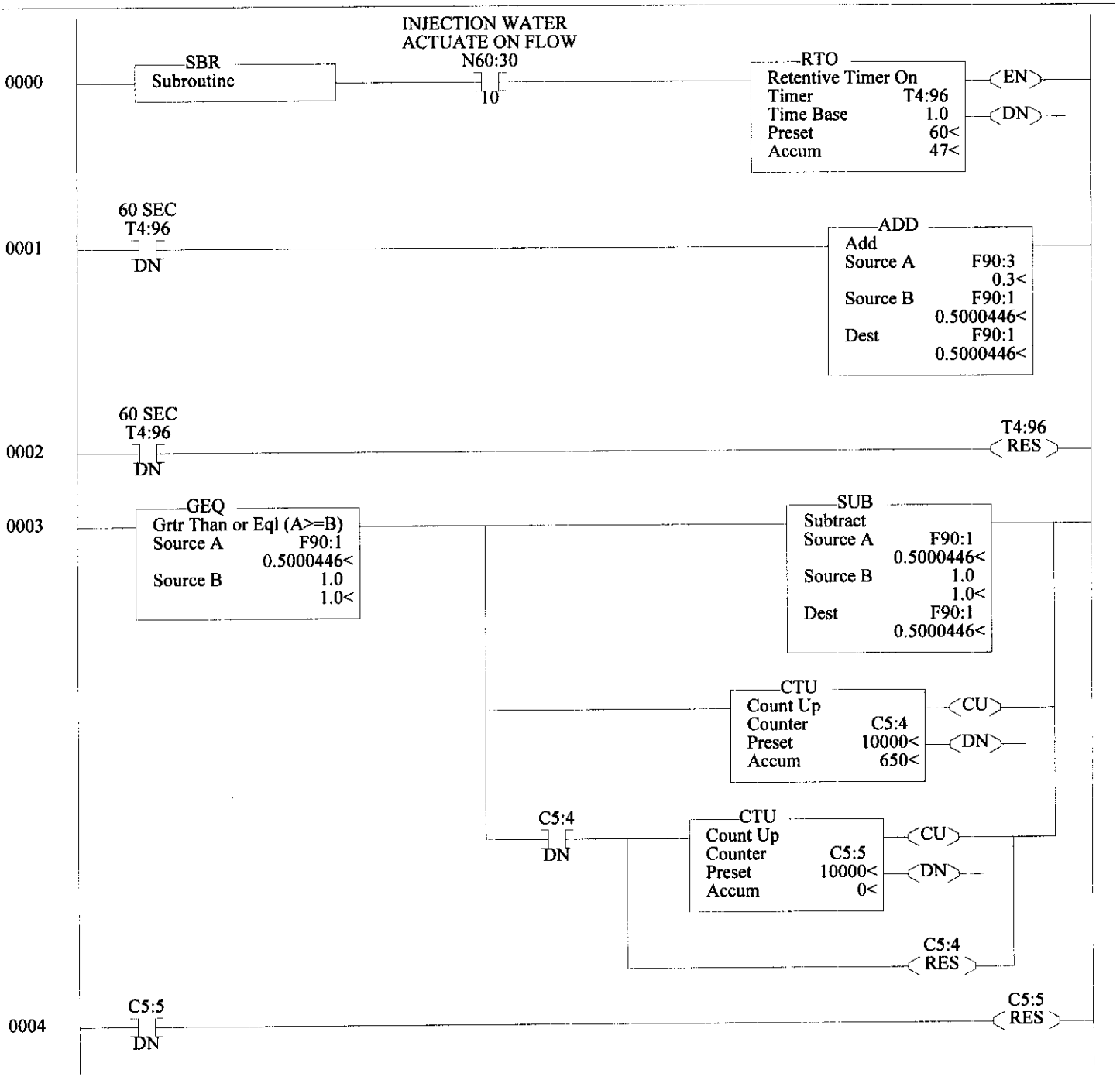

LAD 21 - --- Total Rungs in File = 9

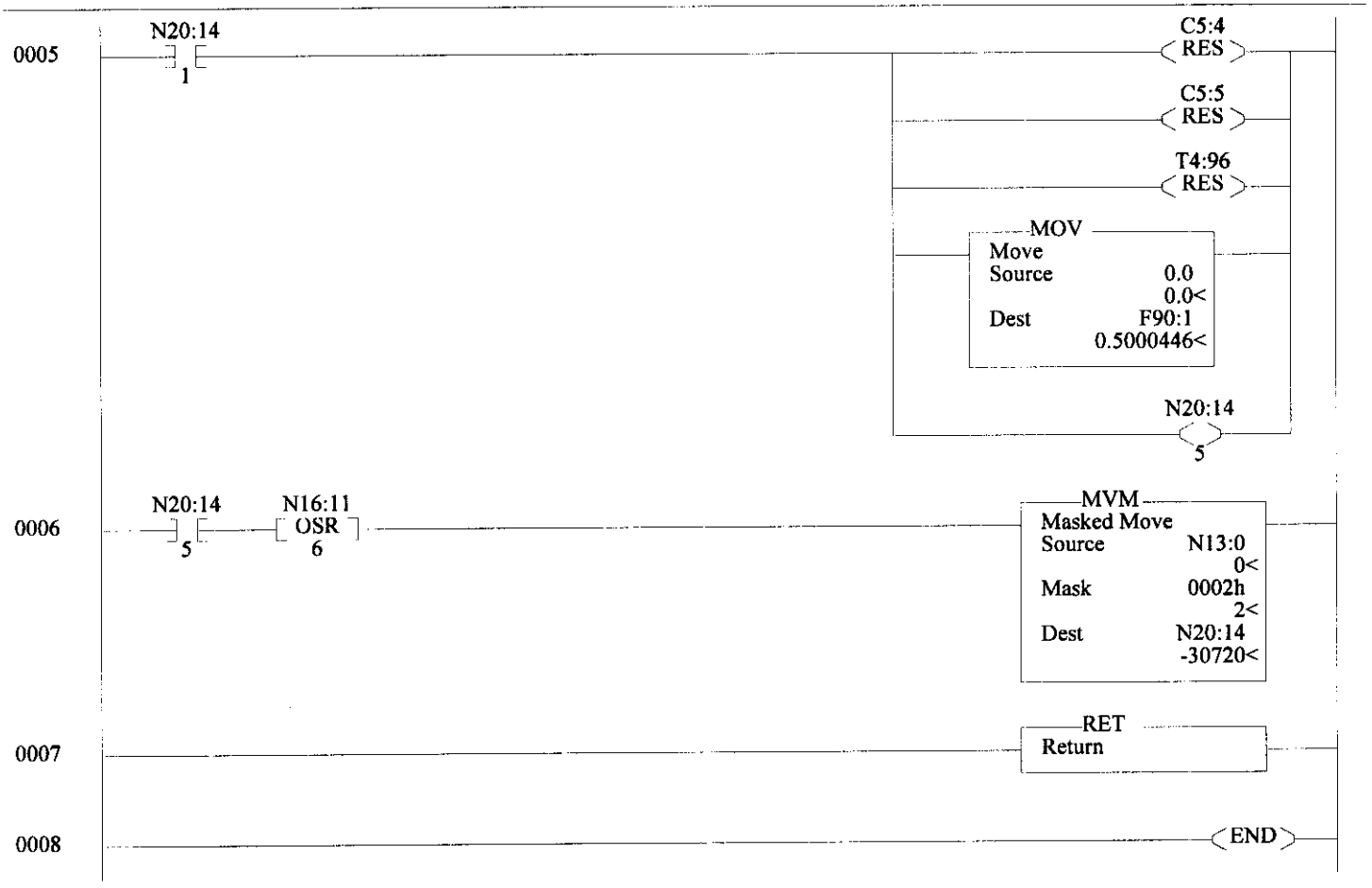

Jul 16 01 FILE: BY105NEW.CFG PAGE 1

DTAM Plus
PROGRAM FILE DOCUMENTATION
Allen-Bradley Company, Inc.

SLC TYPE:	DTAM Plus AB DH485
PROGRAM MEMORY USED:	14528 BYTES
NUMBER OF SCREENS USED:	118

CONFIGURATION PARAMETERS

UPDATE DELAY:	2.00 Seconds
MASTER SECURITY CODE:	00000000
COM PORT PARAMETERS:	19200 Baud, EVEN Parity, EIGHT Data Bits
PRINTER PORT PARAMETERS:	9600 Baud, EVEN Parity, EIGHT Data Bits

SLC 500 CONFIGURATION OPTIONS

SLC 500 NODE ADDRESS:	1
DTAM Plus NODE ADDRESS:	0
MAX NODE ADDRESS:	3
ADVISOR UPDATE RATE:	2.00 Seconds

DTAM Plus ADVISOR:	NOT USED

TIME SYNC REGISTER:	NOT USED

BACKGROUND REGISTER USAGE

BACKGROUND REGISTER 1:	MONITORS BIT DATA. 16 OF 16 BITS ARE USED.
BACKGROUND REGISTER 2:	MONITORS BIT DATA. 16 OF 16 BITS ARE USED.
BACKGROUND REGISTER 3:	MONITORS BIT DATA. 16 OF 16 BITS ARE USED.
BACKGROUND REGISTER 4:	MONITORS BIT DATA. 11 OF 16 BITS ARE USED.

BACKGROUND REGISTER 1: BIT DATA

MONITOR REGISTER NUMBER: N20:15

BIT#	ALARM STATE	GOTO SCREEN#	BIT#	ALARM STATE	GOTO SCREEN#
0	ON (1)	100	8	ON (1)	108
1	ON (1)	101	9	ON (1)	109
2	ON (1)	102	10	ON (1)	110
3	ON (1)	103	11	ON (1)	111
4	ON (1)	104	12	ON (1)	112
5	ON (1)	105	13	ON (1)	113
6	ON (1)	106	14	ON (1)	114
7	ON (1)	107	15	ON (1)	115

BACKGROUND REGISTER 2: BIT DATA

MONITOR REGISTER NUMBER: N20:16

BIT#	ALARM STATE	GOTO SCREEN#	BIT#	ALARM STATE	GOTO SCREEN#
0	ON (1)	116	8	ON (1)	124
1	ON (1)	117	9	ON (1)	125
2	ON (1)	118	10	ON (1)	126
3	ON (1)	119	11	ON (1)	127
4	ON (1)	120	12	ON (1)	128
5	ON (1)	121	13	ON (1)	129
6	ON (1)	122	14	ON (1)	131
7	ON (1)	123	15	ON (1)	132

BACKGROUND REGISTER 3: BIT DATA

MONITOR REGISTER NUMBER: N20:55

BIT#	ALARM STATE	GOTO SCREEN#	BIT#	ALARM STATE	GOTO SCREEN#
0	ON (1)	133	8	ON (1)	141
1	ON (1)	134	9	ON (1)	142
2	ON (1)	135	10	ON (1)	143
3	ON (1)	136	11	ON (1)	144
4	ON (1)	137	12	ON (1)	145
5	ON (1)	138	13	ON (1)	146
6	ON (1)	139	14	ON (1)	147
7	ON (1)	140	15	ON (1)	148

BACKGROUND REGISTER 4: BIT DATA

MONITOR REGISTER NUMBER: N20:56

BIT#	ALARM STATE	GOTO SCREEN#	BIT#	ALARM STATE	GOTO SCREEN#
0	ON (1)	149	8	ON (1)	157
1	ON (1)	150	9	ON (1)	158
2	ON (1)	151	10	ON (1)	159
3	ON (1)	152	11	THIS BIT IS NOT MONITORED	
4	ON (1)	153	12	THIS BIT IS NOT MONITORED	
5	ON (1)	154	13	THIS BIT IS NOT MONITORED	

6	ON (1)	155	14	THIS BIT IS NOT MONITORED
7	ON (1)	156	15	THIS BIT IS NOT MONITORED

ááá

SCREEN#	TYPE	SCREEN#	TYPE
001	MAIN MENU	104	ALARM
006	DATA DISPLAY	105	ALARM
008	SUB-MENU	106	ALARM
009	SECURITY	107	ALARM
010	SUB-MENU	108	ALARM
011	DATA ENTRY	109	ALARM
012	SUB-MENU	110	ALARM
013	DATA DISPLAY	111	ALARM
014	DATA ENTRY	112	ALARM
015	DATA ENTRY	113	ALARM
016	SECURITY	114	ALARM
017	SUB-MENU	115	ALARM
018	DATA ENTRY	116	ALARM
019	DATA ENTRY	117	ALARM
020	DATA DISPLAY	118	ALARM
021	DATA ENTRY	119	ALARM
022	DATA ENTRY	120	ALARM
023	DATA ENTRY	121	ALARM
024	DATA DISPLAY	122	ALARM
025	DATA DISPLAY	123	ALARM
026	DATA DISPLAY	124	ALARM
027	DATA DISPLAY	125	ALARM
028	DATA DISPLAY	126	ALARM
029	DATA DISPLAY	127	ALARM
030	SUB-MENU	128	ALARM
031	DATA ENTRY	129	ALARM
032	DATA ENTRY	130	ALARM
033	DATA DISPLAY	131	ALARM
034	SUB-MENU	132	ALARM
035	DATA ENTRY	133	ALARM
036	DATA ENTRY	134	ALARM
037	DATA DISPLAY	135	ALARM
038	DATA ENTRY	136	ALARM
039	DATA DISPLAY	137	ALARM
040	SUB-MENU	138	ALARM
041	DATA DISPLAY	139	ALARM
042	DATA DISPLAY	140	ALARM
043	DATA DISPLAY	141	ALARM
044	DATA DISPLAY	142	ALARM
045	DATA DISPLAY	143	ALARM
046	DATA DISPLAY	144	ALARM
048	DATA DISPLAY	145	ALARM
050	DATA DISPLAY	146	ALARM
052	DATA DISPLAY	147	ALARM
053	DATA DISPLAY	148	ALARM
054	DATA DISPLAY	149	ALARM
055	DATA DISPLAY	150	ALARM
056	DATA DISPLAY	151	ALARM
057	DATA DISPLAY	152	ALARM
058	DATA DISPLAY	153	ALARM
080	DATA ENTRY	154	ALARM
082	DATA DISPLAY	155	ALARM
083	SUB-MENU	156	ALARM
084	DATA ENTRY	157	ALARM
085	SUB-MENU	158	ALARM
086	SECURITY	159	ALARM
087	DATA ENTRY	200	ALARM

100 ALARM
101 ALARM
102 ALARM

```
P-A/D SECURITY

SCREEN MEMORY USED:    61 BYTES

PREVIOUS MENU:         UNLINKED
NEXT SCREEN:           UNLINKED
PREVIOUS SCREEN:       UNLINKED
SECURITY CODE #1:   12??????
SECURITY CODE #2:   34??????
SECURITY CODE #3:   87??????
```

```
íëëëëëëëëëëëëëëëëëëëëë¡
°*RESTRICTED  ACCESS*°
°     ENTER CODE      °
°      :              °
°                     °
åëëëëëëëëëëëëëëëëëëëëëƒ
```

```
SCREEN #001: MAIN MENU                          íëëëëëëëëëëëëëëëëëëëëëë¡
                                                °      BY-105         °
SCREEN MEMORY USED:   87 BYTES                  °1. PUMP    4. ALARMS°
                                                °2. UTIL    5. CLEAR °
                                                °3. HtTRACE 6. DILUT °
                                                åëëëëëëëëëëëëëëëëëëëëëƒ

Item/Key # 1  links to screen 010       Item/Key # 5  links to screen 023
Item/Key # 2  links to screen 020       Item/Key # 6  links to screen 008
Item/Key # 3  links to screen 030       Item/Key # 7  links to screen 024
Item/Key # 4  links to screen 040       Item/Key # 8  is unlinked
```

```
SCREEN #006: DATA DISPLAY                       íëëëëëëëëëëëëëëëëëëëëëë¡
                                                °  INJECTION SYSTEM   °
SCREEN MEMORY USED:   126 BYTES                 ° INJ PUMP IS:  Þ1Þ   °
                                                °  INJ FLOW SWITCH    °
PREVIOUS MENU:        008                       ° FLOW DETECTED: Þ2Þ  °
NEXT SCREEN:          001                       åëëëëëëëëëëëëëëëëëëëëëƒ
PREVIOUS SCREEN:      UNLINKED
DATA POSITION #1:  BIT DISPLAY

REGISTER:          N60:20                 OFF BIT TEXT:     OFF
BIT NUMBER:        6                      ON BIT TEXT:      ON
TEXT LENGTH:       3

DATA POSITION #2:  BIT DISPLAY

REGISTER:          N60:30                 OFF BIT TEXT:     NO
BIT NUMBER:        10                     ON BIT TEXT:      YES
TEXT LENGTH:       3
```

```
SCREEN #008: SUB-MENU                           íëëëëëëëëëëëëëëëëëëëëëë¡
                                                °1 DILUTION RATIO     °
SCREEN MEMORY USED:   84 BYTES                  °2 INJECTION STATUS   °
PREVIOUS MENU:   001                            °3 INJECT FLOW RATE   °
                                                °4 INJECT TOTAL       °
                                                åëëëëëëëëëëëëëëëëëëëëëƒ

Item/Key # 1  links to screen 034       Item/Key # 5  is unlinked
Item/Key # 2  links to screen 006       Item/Key # 6  is unlinked
Item/Key # 3  links to screen 009       Item/Key # 7  is unlinked
Item/Key # 4  links to screen 083       Item/Key # 8  is unlinked
```

```
SCREEN #009: SECURITY                           íëëëëëëëëëëëëëëëëëëëëëë¡
                                                °*RESTRICTED  ACCESS*°
SCREEN MEMORY USED:   61 BYTES                  °     ENTER CODE      °
                                                °     :               °
PREVIOUS MENU:        008                       °                     °
NEXT SCREEN:          038                       åëëëëëëëëëëëëëëëëëëëëëƒ
PREVIOUS SCREEN:      UNLINKED
SECURITY CODE #1:  11??????
SECURITY CODE #2:  23??????
SECURITY CODE #3:  47??????
```

```
SCREEN #010: SUB-MENU                          íëëëëëëëëëëëëëëëëëëëëëë¡
                                               °1  Pump On/Off        °
SCREEN MEMORY USED:   86 BYTES                 °2  DOV Sub-Menu       °
PREVIOUS MENU:   001                           °3  CVT, WFT, & SPGT   °
                                               °4  DOV Manual Output  °
                                               åëëëëëëëëëëëëëëëëëëëëëƒ

Item/Key # 1  links to screen 011       Item/Key # 5  is unlinked
Item/Key # 2  links to screen 012       Item/Key # 6  is unlinked
Item/Key # 3  links to screen 013       Item/Key # 7  is unlinked
Item/Key # 4  links to screen 022       Item/Key # 8  is unlinked
```

```
SCREEN #011: DATA ENTRY                        íëëëëëëëëëëëëëëëëëëëëëë¡
                                               °PUMP NORM START Þ1Þ   °
SCREEN MEMORY USED:   144 BYTES                °     BUMP START Þ2Þ   °
                                               ° Enter 1 for On,      °
PREVIOUS MENU:        010                      °       0 for Off 3    °
NEXT SCREEN:          015                      åëëëëëëëëëëëëëëëëëëëëëƒ
PREVIOUS SCREEN:      UNLINKED
DATA POSITION #1:  BIT DISPLAY

REGISTER:          N20:14                OFF BIT TEXT:     OFF
BIT NUMBER:        7                     ON BIT TEXT:      ON
TEXT LENGTH:       3

DATA POSITION #2:  BIT DISPLAY

REGISTER:          N20:14                OFF BIT TEXT:     OFF
BIT NUMBER:        6                     ON BIT TEXT:      ON
TEXT LENGTH:       3

DATA POSITION #3: BIT ENTRY

REGISTER:          N20:17                ENTRY FORMAT:     1 & 0 KEYS
BIT NUMBER:        0                     DEFAULT:          NONE
```

```
SCREEN #012: SUB-MENU                          íëëëëëëëëëëëëëëëëëëëëëë¡
                                               °1  Auto/Manual        °
SCREEN MEMORY USED:   76 BYTES                 °2  DOV Setpoint       °
PREVIOUS MENU:   010                           °3  PID Tuning         °
                                               °4  Manual Output      °
                                               åëëëëëëëëëëëëëëëëëëëëëƒ

Item/Key # 1  links to scree 015        Item/Key # 5  is unlinked
Item/Key # 2  links to screen 014       Item/Key # 6  is unlinked
Item/Key # 3  links to screen 016       Item/Key # 7  is unlinked
Item/Key # 4  is unlinked               Item/Key # 8  is unlinked
```

```
   SCREEN #013: DATA DISPLAY                            íëëëëëëëëëëëëëëëëëëëë¡
                                                        °DOV    ÞÞ1Þ  % Þ2Þ 3 °
   SCREEN MEMORY USED:    239 BYTES                     °(CVT) ÞÞÞ4ÞÞ gpm     °
                                                        °WFT   ÞÞ5ÞÞ  in      °
   PREVIOUS MENU:         010                           °SPGR:ÞÞÞ6ÞÞ in       °
   NEXT SCREEN:           022                           åëëëëëëëëëëëëëëëëëëëëƒ
   PREVIOUS SCREEN:       UNLINKED
DATA POSITION #1:  16 BIT SIGNED INTEGER DISPLAY

   REGISTER:            N20:23                   REGISTER LOW:     0
   DECIMAL RIGHT:       0                        REGISTER HIGH:    16383
   DECIMAL LEFT:        3                        DISPLAY LOW:      0
   SHOW SIGN                                     DISPLAY HIGH:     100
   LEADING ZEROS NOT SHOWN

DATA POSITION #2:  BIT DISPLAY

   REGISTER:            N60:31                   OFF BIT TEXT:     Off
   BIT NUMBER:          6                        ON BIT TEXT:      On
   TEXT LENGTH:         3

DATA POSITION #3:  BIT DISPLAY

   REGISTER:            N20:17                   OFF BIT TEXT:     M
   BIT NUMBER:          6                        ON BIT TEXT:      A
   TEXT LENGTH:         1

DATA POSITION #4:  16 BIT SIGNED INTEGER DISPLAY

   REGISTER:            N60:15                   REGISTER LOW:     3277
   DECIMAL RIGHT:       3                        REGISTER HIGH:    16384
   DECIMAL LEFT:        2                        DISPLAY LOW:      0.000
   NO SIGN PLACE                                 DISPLAY HIGH:     14.000
   LEADING ZEROS NOT SHOWN

DATA POSITION #5:  16 BIT UNSIGNED INTEGER DISPLAY

   REGISTER:            N60:13                   REGISTER LOW:     3277
   DECIMAL RIGHT:       1                        REGISTER HIGH:    16384
   DECIMAL LEFT:        3                        DISPLAY LOW:      0.0
   NO SIGN PLACE                                 DISPLAY HIGH:     500.0
   LEADING ZEROS NOT SHOWN

DATA POSITION #6:  16 BIT UNSIGNED INTEGER DISPLAY

   REGISTER:            N60:12                   REGISTER LOW:     3277
   DECIMAL RIGHT:       2                        REGISTER HIGH:    16384
   DECIMAL LEFT:        3                        DISPLAY LOW:      0.00
   NO SIGN PLACE                                 DISPLAY HIGH:     20.00
   LEADING ZEROS NOT SHOWN
```

ááá

```
SCREEN #014: DATA ENTRY                          íëëëëëëëëëëëëëëëëëëëëë¡
                                                 °   DOV: Þ1Þ %        °
SCREEN MEMORY USED:    207 BYTES                 °  SPGR:ÞÞÞ2ÞÞ in     °
                                                 °Old Setpoint ÞÞ3Þin °
PREVIOUS MENU:         012                       °New Setpoint ÞÞ4Þin °
NEXT SCREEN:           001                       åëëëëëëëëëëëëëëëëëëëëëƒ
PREVIOUS SCREEN:       UNLINKED
```

DATA POSITION #1: 16 BIT UNSIGNED INTEGER DISPLAY

REGISTER:	N20:23	REGISTER LOW:	0
DECIMAL RIGHT:	0	REGISTER HIGH:	100
DECIMAL LEFT:	3	DISPLAY LOW:	0
NO SIGN PLACE		DISPLAY HIGH:	100
LEADING ZEROS NOT SHOWN			

DATA POSITION #2: 16 BIT UNSIGNED INTEGER DISPLAY

REGISTER:	N60:12	REGISTER LOW:	3277
DECIMAL RIGHT:	2	REGISTER HIGH:	16384
DECIMAL LEFT:	3	DISPLAY LOW:	0.00
NO SIGN PLACE		DISPLAY HIGH:	20.00
LEADING ZEROS NOT SHOWN			

DATA POSITION #3: 16 BIT UNSIGNED INTEGER DISPLAY

REGISTER:	N20:18	REGISTER LOW:	0
DECIMAL RIGHT:	1	REGISTER HIGH:	16383
DECIMAL LEFT:	2	DISPLAY LOW:	0.0
NO SIGN PLACE		DISPLAY HIGH:	20.0
LEADING ZEROS NOT SHOWN			

DATA POSITION #4: 16 BIT UNSIGNED INTEGER ENTRY

REGISTER:	N20:18	REGISTER LOW:	0
DECIMAL RIGHT:	1	REGISTER HIGH:	16383
DECIMAL LEFT:	2	DISPLAY LOW:	0.0
NO SIGN PLACE		DISPLAY HIGH:	20.0
DEFAULT:	NONE	LOW INPUT LIMIT:	4.0
		HIGH INPUT LIMIT:	9.0

ááá

```
SCREEN #015: DATA ENTRY                          íëëëëëëëëëëëëëëëëëëëëë¡
                                                 °  DOV is in ÞÞÞ1ÞÞ  °
SCREEN MEMORY USED:    114 BYTES                 °Enter 1 for Auto    °
                                                 °       0 for Manual °
PREVIOUS MENU:         012                       °Enter:  2           °
NEXT SCREEN:           013                       åëëëëëëëëëëëëëëëëëëëëëƒ
PREVIOUS SCREEN:       UNLINKED
```

DATA POSITION #1: BIT DISPLAY

REGISTER:	N20:17	OFF BIT TEXT:	Manual
BIT NUMBER:	6	ON BIT TEXT:	Auto
TEXT LENGTH:	6		

DATA POSITION #2: BIT ENTRY

REGISTER:	N20:17	ENTRY FORMAT:	1 & 0 KEYS
BIT NUMBER:	6	DEFAULT:	NONE

```
SCREEN #016: SECURITY                          íëëëëëëëëëëëëëëëëëëëë¡
                                               °*RESTRICTED  ACCESS*°
SCREEN MEMORY USED:   61 BYTES                 °     ENTER CODE     °
                                               °     :              °
PREVIOUS MENU:        012                      °                    °
NEXT SCREEN:          017                      åëëëëëëëëëëëëëëëëëëëƒ
PREVIOUS SCREEN:      UNLINKED
SECURITY CODE #1:  18??????
SECURITY CODE #2:  22??????
SECURITY CODE #3:  44??????
```

```
SCREEN #017: SUB-MENU                          íëëëëëëëëëëëëëëëëëëëë¡
                                               ° DOV PID SUBMENU    °
SCREEN MEMORY USED:   70 BYTES                 °1   Prop Gain       °
PREVIOUS MENU:   012                           °2   Reset           °
                                               °3   Derivative      °
                                               åëëëëëëëëëëëëëëëëëëëƒ

Item/Key # 1  links to screen 018       Item/Key # 5  is unlinked
Item/Key # 2  links to screen 019       Item/Key # 6  is unlinked
Item/Key # 3  links to screen 021       Item/Key # 7  is unlinked
Item/Key # 4  is unlinked               Item/Key # 8  is unlinked
```

```
SCREEN #018: DATA ENTRY                        íëëëëëëëëëëëëëëëëëëëë¡
                                               ° Gain (0.01-327.67) °
SCREEN MEMORY USED:   185 BYTES                °DOV OUTPUT:   Þ1Þ%  °
                                               °Prop. Gain    ÞÞÞ2ÞÞ°
PREVIOUS MENU:        017                      °Enter         ÞÞÞ3ÞÞ°
NEXT SCREEN:          019                      åëëëëëëëëëëëëëëëëëëëƒ
PREVIOUS SCREEN:      UNLINKED
DATA POSITION #1:  16 BIT UNSIGNED INTEGER DISPLAY

REGISTER:          N20:23                  REGISTER LOW:     0
DECIMAL RIGHT:     0                       REGISTER HIGH:    16383
DECIMAL LEFT:      3                       DISPLAY LOW:      0
NO SIGN PLACE                              DISPLAY HIGH:     100
LEADING ZEROS NOT SHOWN

DATA POSITION #2:  16 BIT UNSIGNED INTEGER DISPLAY

REGISTER:          N20:19                  REGISTER LOW:     1
DECIMAL RIGHT:     2                       REGISTER HIGH:    16383
DECIMAL LEFT:      3                       DISPLAY LOW:      0.01
NO SIGN PLACE                              DISPLAY HIGH:     327.67
LEADING ZEROS NOT SHOWN

DATA POSITION #3:  16 BIT UNSIGNED INTEGER ENTRY

REGISTER:          N20:19                  REGISTER LOW:     1
DECIMAL RIGHT:     2                       REGISTER HIGH:    16383
DECIMAL LEFT:      3                       DISPLAY LOW:      0.01
NO SIGN PLACE                              DISPLAY HIGH:     327.67
DEFAULT:           NONE                    LOW INPUT LIMIT:  0.01
                                           HIGH INPUT LIMIT: 327.67
```

```
SCREEN #019: DATA ENTRY                          íëëëëëëëëëëëëëëëëëëëë¡
                                                 °Reset 0.1 to 327.67 °
SCREEN MEMORY USED:    177 BYTES                 °DOV OUTPUT: Þ1Þ%    °
                                                 °Reset:  ÞÞÞ2ÞÞ in/rp°
PREVIOUS MENU:         017                       °Enter:  ÞÞÞ3ÞÞ      °
NEXT SCREEN:           021                       åëëëëëëëëëëëëëëëëëëëƒ
PREVIOUS SCREEN:       UNLINKED
DATA POSITION #1:  16 BIT UNSIGNED INTEGER DISPLAY

REGISTER:          N20:23                REGISTER LOW:      0
DECIMAL RIGHT:     0                     REGISTER HIGH:     16383
DECIMAL LEFT:      3                     DISPLAY LOW:       0
NO SIGN PLACE                            DISPLAY HIGH:      100
LEADING ZEROS NOT SHOWN

DATA POSITION #2:  16 BIT UNSIGNED INTEGER DISPLAY

REGISTER:          N20:20                REGISTER LOW:      1
DECIMAL RIGHT:     2                     REGISTER HIGH:     16383
DECIMAL LEFT:      3                     DISPLAY LOW:       0.01
NO SIGN PLACE                            DISPLAY HIGH:      327.67
LEADING ZEROS NOT SHOWN

DATA POSITION #3:  16 BIT UNSIGNED INTEGER ENTRY

REGISTER:          N20:20                REGISTER LOW:      1
DECIMAL RIGHT:     2                     REGISTER HIGH:     16383
DECIMAL LEFT:      3                     DISPLAY LOW:       0.01
NO SIGN PLACE                            DISPLAY HIGH:      327.67
DEFAULT:           NONE                  LOW INPUT LIMIT:   0.01
                                         HIGH INPUT LIMIT:  327.67
```

```
SCREEN #020: DATA DISPLAY                           íëëëëëëëëëëëëëëëëëëë¡
                                                    °Water Tank ÞÞ1Þ in  °
SCREEN MEMORY USED:    203 BYTES                    °PLC Temp   ÞÞ2Þ F   °
                                                    °Compr Temp ÞÞ3Þ F   °
PREVIOUS MENU:         001                          °F WTRTemp  ÞÞ4Þ F   °
NEXT SCREEN:           027                          åëëëëëëëëëëëëëëëëëëëƒ
PREVIOUS SCREEN:       UNLINKED
```

DATA POSITION #1: 16 BIT UNSIGNED INTEGER DISPLAY

```
REGISTER:           N60:14              REGISTER LOW:     3277
DECIMAL RIGHT:      1                   REGISTER HIGH:    16384
DECIMAL LEFT:       2                   DISPLAY LOW:      0.0
NO SIGN PLACE                           DISPLAY HIGH:     62.0
LEADING ZEROS NOT SHOWN
```

DATA POSITION #2: 16 BIT SIGNED INTEGER DISPLAY

```
REGISTER:           N60:27              REGISTER LOW:     -454
DECIMAL RIGHT:      0                   REGISTER HIGH:    752
DECIMAL LEFT:       3                   DISPLAY LOW:      -454
SHOW SIGN                               DISPLAY HIGH:     752
LEADING ZEROS NOT SHOWN
```

DATA POSITION #3: 16 BIT SIGNED INTEGER DISPLAY

```
REGISTER:           N60:26              REGISTER LOW:     -454
DECIMAL RIGHT:      0                   REGISTER HIGH:    752
DECIMAL LEFT:       3                   DISPLAY LOW:      -454
SHOW SIGN                               DISPLAY HIGH:     752
LEADING ZEROS NOT SHOWN
```

DATA POSITION #4: 16 BIT SIGNED INTEGER DISPLAY

```
REGISTER:           N60:35              REGISTER LOW:     -454
DECIMAL RIGHT:      0                   REGISTER HIGH:    752
DECIMAL LEFT:       3                   DISPLAY LOW:      -454
SHOW SIGN                               DISPLAY HIGH:     752
LEADING ZEROS NOT SHOWN
```

```
SCREEN #021: DATA ENTRY                               íëëëëëëëëëëëëëëëëëëë¡
                                                      °Derv 0.01 to 327.67 °
SCREEN MEMORY USED:   185 BYTES                       °DOV OUTPUT:  ÞÞ1ÞÞ% °
                                                      °Derivative:  ÞÞÞ2ÞÞ °
PREVIOUS MENU:        017                             °Enter:       ÞÞÞ3ÞÞ °
NEXT SCREEN:          018                             åëëëëëëëëëëëëëëëëëëëƒ
PREVIOUS SCREEN:      UNLINKED
```

DATA POSITION #1: 16 BIT UNSIGNED INTEGER DISPLAY

```
REGISTER:         N20:23               REGISTER LOW:     0
DECIMAL RIGHT:    0                    REGISTER HIGH:    16383
DECIMAL LEFT:     5                    DISPLAY LOW:      0
NO SIGN PLACE                          DISPLAY HIGH:     100
LEADING ZEROS NOT SHOWN
```

DATA POSITION #2: 16 BIT UNSIGNED INTEGER DISPLAY

```
REGISTER:         N20:21               REGISTER LOW:     1
DECIMAL RIGHT:    2                    REGISTER HIGH:    16383
DECIMAL LEFT:     3                    DISPLAY LOW:      0.01
NO SIGN PLACE                          DISPLAY HIGH:     327.67
LEADING ZEROS NOT SHOWN
```

DATA POSITION #3: 16 BIT UNSIGNED INTEGER ENTRY

```
REGISTER:         N20:21               REGISTER LOW:     1
DECIMAL RIGHT:    2                    REGISTER HIGH:    16383
DECIMAL LEFT:     3                    DISPLAY LOW:      0.01
NO SIGN PLACE                          DISPLAY HIGH:     327.67
DEFAULT:          NONE                 LOW INPUT LIMIT:  0.01
                                       HIGH INPUT LIMIT: 327.67
```

```
SCREEN #022: DATA ENTRY                          íëëëëëëëëëëëëëëëëëëëëëë¡
                                                 °   DOV in ÞÞÞ1ÞÞ     °
SCREEN MEMORY USED:    157 BYTES                 °Current Output:Þ2Þ% °
                                                 °New Output:     Þ3Þ% °
PREVIOUS MENU:         010                       °                      °
NEXT SCREEN:           013                       åëëëëëëëëëëëëëëëëëëëëëƒ
PREVIOUS SCREEN:       UNLINKED
DATA POSITION #1:  BIT DISPLAY

REGISTER:          N20:17                OFF BIT TEXT:      Manual
BIT NUMBER:        6                     ON BIT TEXT:       AUTO
TEXT LENGTH:       6

DATA POSITION #2:  16 BIT UNSIGNED INTEGER DISPLAY

REGISTER:          N20:23                REGISTER LOW:      0
DECIMAL RIGHT:     0                     REGISTER HIGH:     16383
DECIMAL LEFT:      3                     DISPLAY LOW:       0
NO SIGN PLACE                            DISPLAY HIGH:      100
LEADING ZEROS NOT SHOWN

DATA POSITION #3:  16 BIT UNSIGNED INTEGER ENTRY

REGISTER:          N20:23                REGISTER LOW:      0
DECIMAL RIGHT:     0                     REGISTER HIGH:     16384
DECIMAL LEFT:      3                     DISPLAY LOW:       0
NO SIGN PLACE                            DISPLAY HIGH:      100
DEFAULT:           NONE                  LOW INPUT LIMIT:   0
                                         HIGH INPUT LIMIT:  100

SCREEN #023: DATA ENTRY                          íëëëëëëëëëëëëëëëëëëëëëë¡
                                                 °  Universal Alarm     °
SCREEN MEMORY USED:    94 BYTES                  °    ACKNOWLEDGE       °
                                                 °  Press 1 to clear    °
PREVIOUS MENU:         001                       °    All Alarms 1      °
NEXT SCREEN:           001                       åëëëëëëëëëëëëëëëëëëëëëƒ
PREVIOUS SCREEN:       UNLINKED
DATA POSITION #1: BIT ENTRY

REGISTER:          N20:17                ENTRY FORMAT:      1 & 0 KEYS
BIT NUMBER:        10                    DEFAULT:           NONE
```

áá

```
SCREEN #024: DATA DISPLAY                          íëëëëëëëëëëëëëëëëëëëëë¡
                                                   °I:4.0 ÞÞ1ÞÞ SGT      °
SCREEN MEMORY USED:    194 BYTES                   °I:4.1 ÞÞ2ÞÞ WFT      °
                                                   °I:4.2 ÞÞ3ÞÞ WTL      °
PREVIOUS MENU:         001                         °I:4.3 ÞÞ4ÞÞ CVT      °
NEXT SCREEN:           025                         åëëëëëëëëëëëëëëëëëëëëëƒ
PREVIOUS SCREEN:       UNLINKED
```

DATA POSITION #1: 16 BIT UNSIGNED INTEGER DISPLAY

REGISTER:	N60:12	REGISTER LOW:	0
DECIMAL RIGHT:	0	REGISTER HIGH:	32767
DECIMAL LEFT:	5	DISPLAY LOW:	0
NO SIGN PLACE		DISPLAY HIGH:	32767
LEADING ZEROS NOT SHOWN			

DATA POSITION #2: 16 BIT UNSIGNED INTEGER DISPLAY

REGISTER:	N60:13	REGISTER LOW:	0
DECIMAL RIGHT:	0	REGISTER HIGH:	32767
DECIMAL LEFT:	5	DISPLAY LOW:	0
NO SIGN PLACE		DISPLAY HIGH:	32767
LEADING ZEROS NOT SHOWN			

DATA POSITION #3: 16 BIT UNSIGNED INTEGER DISPLAY

REGISTER:	N60:14	REGISTER LOW:	0
DECIMAL RIGHT:	0	REGISTER HIGH:	32767
DECIMAL LEFT:	5	DISPLAY LOW:	0
NO SIGN PLACE		DISPLAY HIGH:	32767
LEADING ZEROS NOT SHOWN			

DATA POSITION #4: 16 BIT UNSIGNED INTEGER DISPLAY

REGISTER:	N60:15	REGISTER LOW:	0
DECIMAL RIGHT:	0	REGISTER HIGH:	32767
DECIMAL LEFT:	5	DISPLAY LOW:	0
NO SIGN PLACE		DISPLAY HIGH:	32767
LEADING ZEROS NOT SHOWN			

áá

```
SCREEN #025: DATA DISPLAY                            íëëëëëëëëëëëëëëëëëëëëë¡
                                                     °COMPRS temp  ÞÞ1Þ F °
SCREEN MEMORY USED:   210 BYTES                      °PMPASY temp  ÞÞ2Þ F °
                                                     °JMPR    temp  ÞÞ3Þ F °
PREVIOUS MENU:        UNLINKED                       °PLC CAB temp ÞÞ4Þ F °
NEXT SCREEN:          026                            åëëëëëëëëëëëëëëëëëëëëëƒ
PREVIOUS SCREEN:      UNLINKED
```

DATA POSITION #1: 16 BIT SIGNED INTEGER DISPLAY

REGISTER:	N60:26	REGISTER LOW:	-454
DECIMAL RIGHT:	0	REGISTER HIGH:	752
DECIMAL LEFT:	3	DISPLAY LOW:	-454
SHOW SIGN		DISPLAY HIGH:	752
LEADING ZEROS NOT SHOWN			

DATA POSITION #2: 16 BIT SIGNED INTEGER DISPLAY

REGISTER:	N60:34	REGISTER LOW:	-454
DECIMAL RIGHT:	0	REGISTER HIGH:	752
DECIMAL LEFT:	3	DISPLAY LOW:	-454
SHOW SIGN		DISPLAY HIGH:	752
LEADING ZEROS NOT SHOWN			

DATA POSITION #3: 16 BIT SIGNED INTEGER DISPLAY

REGISTER:	N60:25	REGISTER LOW:	-454
DECIMAL RIGHT:	0	REGISTER HIGH:	752
DECIMAL LEFT:	3	DISPLAY LOW:	-454
SHOW SIGN		DISPLAY HIGH:	752
LEADING ZEROS NOT SHOWN			

DATA POSITION #4: 16 BIT SIGNED INTEGER DISPLAY

REGISTER:	N60:27	REGISTER LOW:	-454
DECIMAL RIGHT:	0	REGISTER HIGH:	752
DECIMAL LEFT:	3	DISPLAY LOW:	-454
SHOW SIGN		DISPLAY HIGH:	752
LEADING ZEROS NOT SHOWN			

```
Jul 16 01                          FILE: BY105NEW.CFG                          PAGE  16
ááááááááááááááááááááááááááááááááááááááááááááááááááááááááááááááááááááááááááááááá

   SCREEN #026: DATA DISPLAY                          íëëëëëëëëëëëëëëëëëëëëëë¡
                                                      °PMP DISC  Þ1Þ   psi °
   SCREEN MEMORY USED:   191 BYTES                    °PMP FLOW  ÞÞ2ÞÞ gpm °
                                                      °TOTAL ÞÞ3ÞÞÞ4Þ  gal °
   PREVIOUS MENU:        UNLINKED                     °                    °
   NEXT SCREEN:          001                          åëëëëëëëëëëëëëëëëëëëëëƒ
   PREVIOUS SCREEN:      UNLINKED
DATA POSITION #1:  16 BIT UNSIGNED INTEGER DISPLAY

   REGISTER:          N60:6                  REGISTER LOW:     3277
   DECIMAL RIGHT:     0                      REGISTER HIGH:    16383
   DECIMAL LEFT:      3                      DISPLAY LOW:      0
   NO SIGN PLACE                             DISPLAY HIGH:     300
   LEADING ZEROS NOT SHOWN

DATA POSITION #2:  16 BIT UNSIGNED INTEGER DISPLAY

   REGISTER:          N60:15                 REGISTER LOW:     3277
   DECIMAL RIGHT:     2                      REGISTER HIGH:    16383
   DECIMAL LEFT:      2                      DISPLAY LOW:      0.00
   NO SIGN PLACE                             DISPLAY HIGH:     14.00
   LEADING ZEROS NOT SHOWN

DATA POSITION #3:  16 BIT UNSIGNED INTEGER DISPLAY

   REGISTER:          C5:2.2                 REGISTER LOW:     0
   DECIMAL RIGHT:     0                      REGISTER HIGH:    9999
   DECIMAL LEFT:      4                      DISPLAY LOW:      0
   NO SIGN PLACE                             DISPLAY HIGH:     9999
   LEADING ZEROS NOT SHOWN

DATA POSITION #4:  16 BIT UNSIGNED INTEGER DISPLAY

   REGISTER:          C5:1.2                 REGISTER LOW:     0
   DECIMAL RIGHT:     0                      REGISTER HIGH:    9999
   DECIMAL LEFT:      4                      DISPLAY LOW:      0
   NO SIGN PLACE                             DISPLAY HIGH:     9999
   SHOW LEADING ZEROS
```

```
SCREEN #027: DATA DISPLAY                          íëëëëëëëëëëëëëëëëëëëë¡
                                                   °F WTR TEMP  ÞÞ1Þ F  °
SCREEN MEMORY USED:   241 BYTES                    °PUMP DISC     Þ2Þ psi°
                                                   °PUMP FLOW  ÞÞ3ÞÞ gpm°
PREVIOUS MENU:        UNLINKED                     °TOTAL    ÞÞ4ÞÞÞ5Þ gal°
NEXT SCREEN:          028                          åëëëëëëëëëëëëëëëëëëëëƒ
PREVIOUS SCREEN:      UNLINKED
```

DATA POSITION #1: 16 BIT SIGNED INTEGER DISPLAY

REGISTER:	N60:35	REGISTER LOW:	-454
DECIMAL RIGHT:	0	REGISTER HIGH:	752
DECIMAL LEFT:	3	DISPLAY LOW:	-454
SHOW SIGN		DISPLAY HIGH:	752
LEADING ZEROS NOT SHOWN			

DATA POSITION #2: 16 BIT UNSIGNED INTEGER DISPLAY

REGISTER:	N60:6	REGISTER LOW:	3277
DECIMAL RIGHT:	0	REGISTER HIGH:	16383
DECIMAL LEFT:	3	DISPLAY LOW:	0
NO SIGN PLACE		DISPLAY HIGH:	300
LEADING ZEROS NOT SHOWN			

DATA POSITION #3: 16 BIT UNSIGNED INTEGER DISPLAY

REGISTER:	N60:15	REGISTER LOW:	3277
DECIMAL RIGHT:	2	REGISTER HIGH:	16383
DECIMAL LEFT:	2	DISPLAY LOW:	0.00
NO SIGN PLACE		DISPLAY HIGH:	14.00
LEADING ZEROS NOT SHOWN			

DATA POSITION #4: 16 BIT UNSIGNED INTEGER DISPLAY

REGISTER:	C5:2.2	REGISTER LOW:	0
DECIMAL RIGHT:	0	REGISTER HIGH:	9999
DECIMAL LEFT:	4	DISPLAY LOW:	0
NO SIGN PLACE		DISPLAY HIGH:	9999
LEADING ZEROS NOT SHOWN			

DATA POSITION #5: 16 BIT UNSIGNED INTEGER DISPLAY

REGISTER:	C5:1.2	REGISTER LOW:	0
DECIMAL RIGHT:	0	REGISTER HIGH:	9999
DECIMAL LEFT:	4	DISPLAY LOW:	0
NO SIGN PLACE		DISPLAY HIGH:	9999
LEADING ZEROS NOT SHOWN			

```
SCREEN #028: DATA DISPLAY                          íëëëëëëëëëëëëëëëëëëëëëë¡
                                                   º                      º
SCREEN MEMORY USED:    73 BYTES                    º                      º
                                                   ºDIL RATIO    Þ1Þ %    º
PREVIOUS MENU:         UNLINKED                    ºTIME         02:27    º
NEXT SCREEN:           029                         åëëëëëëëëëëëëëëëëëëëëëƒ
PREVIOUS SCREEN:       UNLINKED
DATA POSITION #1:  16 BIT SIGNED INTEGER DISPLAY

REGISTER:          N30:3                   REGISTER LOW:     0
DECIMAL RIGHT:     0                       REGISTER HIGH:    100
DECIMAL LEFT:      3                       DISPLAY LOW:      0
NO SIGN PLACE                              DISPLAY HIGH:     100
SHOW LEADING ZEROS
```

```
SCREEN #029: DATA DISPLAY                          íëëëëëëëëëëëëëëëëëëëëëë¡
                                                   ºMTR WINDNG ÞÞ1ÞÞ F    º
SCREEN MEMORY USED:    217 BYTES                   ºPS2 FL PR  ÞÞ2Þ PSI   º
                                                   ºXFR PRESS  Þ3Þ  PSI   º
PREVIOUS MENU:         UNLINKED                    ºMIN FL ÞÞÞÞÞÞ4ÞÞÞÞÞÞº
NEXT SCREEN:           037                         åëëëëëëëëëëëëëëëëëëëëëƒ
PREVIOUS SCREEN:       028
DATA POSITION #1:  16 BIT UNSIGNED INTEGER DISPLAY

REGISTER:          N60:16                  REGISTER LOW:     3277
DECIMAL RIGHT:     1                       REGISTER HIGH:    16383
DECIMAL LEFT:      3                       DISPLAY LOW:      40.0
NO SIGN PLACE                              DISPLAY HIGH:     430.0
LEADING ZEROS NOT SHOWN

DATA POSITION #2:  16 BIT UNSIGNED INTEGER DISPLAY

REGISTER:          N60:17                  REGISTER LOW:     3277
DECIMAL RIGHT:     1                       REGISTER HIGH:    16383
DECIMAL LEFT:      2                       DISPLAY LOW:      0.0
NO SIGN PLACE                              DISPLAY HIGH:     30.0
LEADING ZEROS NOT SHOWN

DATA POSITION #3:  16 BIT UNSIGNED INTEGER DISPLAY

REGISTER:          N60:18                  REGISTER LOW:     3277
DECIMAL RIGHT:     0                       REGISTER HIGH:    16383
DECIMAL LEFT:      3                       DISPLAY LOW:      0
NO SIGN PLACE                              DISPLAY HIGH:     300
LEADING ZEROS NOT SHOWN

DATA POSITION #4:  32 BIT FLOATING POINT DISPLAY

REGISTER:          F8:23
MIN REGISTER:      0.32                    MIN DISPLAY:      0.32
MAX REGISTER:      4.6                     MAX DISPLAY:      4.6
```

áá

```
SCREEN #030: SUB-MENU                                 íëëëëëëëëëëëëëëëëëëëë¡
                                                      ° HEAT TRACE Menu    °
SCREEN MEMORY USED:   60 BYTES                        °1   Htr On/Off      °
PREVIOUS MENU:   001                                  °2   Setpoint        °
                                                      °                    °
                                                      åëëëëëëëëëëëëëëëëëëëëƒ

Item/Key # 1  links to screen 031             Item/Key # 5  is unlinked
Item/Key # 2  links to screen 085             Item/Key # 6  is unlinked
Item/Key # 3  links to screen 033             Item/Key # 7  is unlinked
Item/Key # 4  is unlinked                     Item/Key # 8  is unlinked
```

áá

```
   SCREEN #031: DATA ENTRY                            íëëëëëëëëëëëëëëëëëëëë¡
                                                      °   HEAT TRACE       °
   SCREEN MEMORY USED:   104 BYTES                    °Htr is Þ1Þ          °
                                                      °Enter 1 for On      °
   PREVIOUS MENU:        030                          °      0 for OFF:2   °
   NEXT SCREEN:          001                          åëëëëëëëëëëëëëëëëëëëëƒ
   PREVIOUS SCREEN:      UNLINKED
DATA POSITION #1:  BIT DISPLAY

   REGISTER:          N20:17                 OFF BIT TEXT:     OFF
   BIT NUMBER:        4                      ON BIT TEXT:      ON
   TEXT LENGTH:       3

DATA POSITION #2: BIT ENTRY

   REGISTER:          N20:17                 ENTRY FORMAT:     1 & 0 KEYS
   BIT NUMBER:        4                      DEFAULT:          NONE
```

ááá

```
SCREEN #032: DATA ENTRY                              íëëëëëëëëëëëëëëëëëëëëë¡
                                                     °JumperTemp:  ÞÞÞ1ÞÞF°
SCREEN MEMORY USED:    167 BYTES                     °                     °
                                                     °Old Setpoint:ÞÞÞ2ÞÞ °
PREVIOUS MENU:         085                           °New Setpoint:ÞÞÞ3ÞÞF°
NEXT SCREEN:           084                           åëëëëëëëëëëëëëëëëëëëëëƒ
PREVIOUS SCREEN:       UNLINKED
```

DATA POSITION #1: 16 BIT SIGNED INTEGER DISPLAY

REGISTER:	N31:2	REGISTER LOW:	-454
DECIMAL RIGHT:	0	REGISTER HIGH:	752
DECIMAL LEFT:	5	DISPLAY LOW:	-454
SHOW SIGN		DISPLAY HIGH:	752
LEADING ZEROS NOT SHOWN			

DATA POSITION #2: 16 BIT SIGNED INTEGER DISPLAY

REGISTER:	N31:4	REGISTER LOW:	-454
DECIMAL RIGHT:	0	REGISTER HIGH:	752
DECIMAL LEFT:	5	DISPLAY LOW:	-454
SHOW SIGN		DISPLAY HIGH:	752
LEADING ZEROS NOT SHOWN			

DATA POSITION #3: 16 BIT SIGNED INTEGER ENTRY

REGISTER:	N31:4	REGISTER LOW:	-454
DECIMAL RIGHT:	0	REGISTER HIGH:	752
DECIMAL LEFT:	5	DISPLAY LOW:	-454
SHOW SIGN		DISPLAY HIGH:	752
DEFAULT:	NONE	LOW INPUT LIMIT:	50
		HIGH INPUT LIMIT:	200

```
SCREEN #033: DATA DISPLAY                          íëëëëëëëëëëëëëëëëëëëë¡
                                                   °Shutoff T/C:ÞÞÞ1ÞÞ F°
SCREEN MEMORY USED:   211 BYTES                    °Shutoff S.P:ÞÞÞ2ÞÞ F°
                                                   °Control T/C:ÞÞÞ3ÞÞ F°
PREVIOUS MENU:        030                          °Control S.P:ÞÞÞ4ÞÞ F°
NEXT SCREEN:          001                          åëëëëëëëëëëëëëëëëëëëƒ
PREVIOUS SCREEN:      UNLINKED
DATA POSITION #1:  16 BIT SIGNED INTEGER DISPLAY

REGISTER:          N31:2                  REGISTER LOW:     -454
DECIMAL RIGHT:     0                      REGISTER HIGH:    752
DECIMAL LEFT:      5                      DISPLAY LOW:      -454
SHOW SIGN                                 DISPLAY HIGH:     752
LEADING ZEROS NOT SHOWN

DATA POSITION #2:  16 BIT SIGNED INTEGER DISPLAY

REGISTER:          N31:5                  REGISTER LOW:     -454
DECIMAL RIGHT:     0                      REGISTER HIGH:    752
DECIMAL LEFT:      5                      DISPLAY LOW:      -454
SHOW SIGN                                 DISPLAY HIGH:     752
LEADING ZEROS NOT SHOWN

DATA POSITION #3:  16 BIT SIGNED INTEGER DISPLAY

REGISTER:          N31:1                  REGISTER LOW:     -454
DECIMAL RIGHT:     0                      REGISTER HIGH:    752
DECIMAL LEFT:      5                      DISPLAY LOW:      -454
SHOW SIGN                                 DISPLAY HIGH:     752
LEADING ZEROS NOT SHOWN

DATA POSITION #4:  16 BIT SIGNED INTEGER DISPLAY

REGISTER:          N31:4                  REGISTER LOW:     -454
DECIMAL RIGHT:     0                      REGISTER HIGH:    752
DECIMAL LEFT:      5                      DISPLAY LOW:      -454
SHOW SIGN                                 DISPLAY HIGH:     752
LEADING ZEROS NOT SHOWN
```

```
SCREEN #034: SUB-MENU                              íëëëëëëëëëëëëëëëëëëëë¡
                                                   °   DILUTION MENU    °
SCREEN MEMORY USED:   84 BYTES                     ° 1. DILUTION RATIO  °
PREVIOUS MENU:   008                               ° 2. MIN DIL FLOW    °
                                                   ° 3. MAX DIL FLOW    °
                                                   åëëëëëëëëëëëëëëëëëëëƒ

Item/Key # 1  links to screen 035        Item/Key # 5  is unlinked
Item/Key # 2  links to screen 036        Item/Key # 6  is unlinked
Item/Key # 3  links to screen 080        Item/Key # 7  is unlinked
Item/Key # 4  is unlinked                Item/Key # 8  is unlinked
```

áá

```
   SCREEN #035: DATA ENTRY                                     íëëëëëëëëëëëëëëëëëëëë¡
                                                               °   Dilution Ratio   °
   SCREEN MEMORY USED:    133 BYTES                            ° Current ratio:Þ1Þ% °
                                                               ° New ratio    :Þ2Þ% °
   PREVIOUS MENU:         034                                  °                    °
   NEXT SCREEN:           001                                  åëëëëëëëëëëëëëëëëëëëëƒ
   PREVIOUS SCREEN:       UNLINKED
DATA POSITION #1:  16 BIT SIGNED INTEGER DISPLAY

   REGISTER:          N30:3                    REGISTER LOW:      0
   DECIMAL RIGHT:     0                        REGISTER HIGH:     100
   DECIMAL LEFT:      3                        DISPLAY LOW:       0
   NO SIGN PLACE                               DISPLAY HIGH:      100
   SHOW LEADING ZEROS

DATA POSITION #2:  16 BIT SIGNED INTEGER ENTRY

   REGISTER:          N30:3                    REGISTER LOW:      0
   DECIMAL RIGHT:     0                        REGISTER HIGH:     100
   DECIMAL LEFT:      3                        DISPLAY LOW:       0
   NO SIGN PLACE                               DISPLAY HIGH:      100
   DEFAULT:           NONE                     LOW INPUT LIMIT:   0
                                               HIGH INPUT LIMIT:  100
```

áá

```
   SCREEN #036: DATA ENTRY                                     íëëëëëëëëëëëëëëëëëëëë¡
                                                               ° MIN FLOW:          °
   SCREEN MEMORY USED:    157 BYTES                            ° ÞÞÞÞÞÞ1ÞÞÞÞÞÞ GPM  °
                                                               ° NEW FLOW:          °
   PREVIOUS MENU:         034                                  ° ÞÞÞÞÞÞ2ÞÞÞÞÞÞ GPM  °
   NEXT SCREEN:           034                                  åëëëëëëëëëëëëëëëëëëëëƒ
   PREVIOUS SCREEN:       UNLINKED
DATA POSITION #1:  32 BIT FLOATING POINT DISPLAY

   REGISTER:          F8:23
   MIN REGISTER:      0.32                     MIN DISPLAY:       0.32
   MAX REGISTER:      4.6                      MAX DISPLAY:       4.6

DATA POSITION #2:  32 BIT FLOATING POINT ENTRY

   REGISTER:          F8:23
   MIN REGISTER:      0.32                     LOW INPUT LIMIT:   0.32
   MAX REGISTER:      4.6                      HIGH INPUT LIMIT:  4.6
   MIN ENTRY:         0.32                     DEFAULT:           NONE
   MAX ENTRY:         4.6
```

áá

```
   SCREEN #037: DATA DISPLAY                          íëëëëëëëëëëëëëëëëëëëë¡
                                                      °WTR CAB TEMP ÞÞ1Þ F °
   SCREEN MEMORY USED:   217 BYTES                    °WFIE TEMP     ÞÞ2Þ F °
                                                      °MAX FL ÞÞÞÞÞÞ3ÞÞÞÞÞÞ°
   PREVIOUS MENU:        UNLINKED                     °FL WTR TEMP ÞÞ4Þ  F °
   NEXT SCREEN:          025                          åëëëëëëëëëëëëëëëëëëëëƒ
   PREVIOUS SCREEN:      029
DATA POSITION #1:  16 BIT SIGNED INTEGER DISPLAY

   REGISTER:          N60:32                   REGISTER LOW:      -454
   DECIMAL RIGHT:     0                        REGISTER HIGH:     752
   DECIMAL LEFT:      3                        DISPLAY LOW:       -454
   SHOW SIGN                                   DISPLAY HIGH:      752
   LEADING ZEROS NOT SHOWN

DATA POSITION #2:  16 BIT SIGNED INTEGER DISPLAY

   REGISTER:          N60:33                   REGISTER LOW:      -454
   DECIMAL RIGHT:     0                        REGISTER HIGH:     752
   DECIMAL LEFT:      3                        DISPLAY LOW:       -454
   SHOW SIGN                                   DISPLAY HIGH:      752
   LEADING ZEROS NOT SHOWN

DATA POSITION #3:  32 BIT FLOATING POINT DISPLAY

   REGISTER:          F8:24
   MIN REGISTER:      0.32                     MIN DISPLAY:       0.32
   MAX REGISTER:      4.6                      MAX DISPLAY:       4.6

DATA POSITION #4:  16 BIT SIGNED INTEGER DISPLAY

   REGISTER:          N60:35                   REGISTER LOW:      -454
   DECIMAL RIGHT:     0                        REGISTER HIGH:     752
   DECIMAL LEFT:      3                        DISPLAY LOW:       -454
   SHOW SIGN                                   DISPLAY HIGH:      752
   LEADING ZEROS NOT SHOWN
```

áá

```
   SCREEN #038: DATA ENTRY                            íëëëëëëëëëëëëëëëëëëëë¡
                                                      °INJ FLOW RATE EXIST °
   SCREEN MEMORY USED:   162 BYTES                    °ÞÞÞÞÞÞ1ÞÞÞÞÞÞ GPM   °
                                                      °NEW RATE            °
   PREVIOUS MENU:        UNLINKED                     °ÞÞÞÞÞÞ2ÞÞÞÞÞÞ GPM   °
   NEXT SCREEN:          039                          åëëëëëëëëëëëëëëëëëëëëƒ
   PREVIOUS SCREEN:      UNLINKED
DATA POSITION #1:  32 BIT FLOATING POINT DISPLAY

   REGISTER:          F90:3
   MIN REGISTER:      0.3                      MIN DISPLAY:       0.3
   MAX REGISTER:      1                        MAX DISPLAY:       1

DATA POSITION #2:  32 BIT FLOATING POINT ENTRY

   REGISTER:          F90:3
   MIN REGISTER:      0.3                      LOW INPUT LIMIT:  0.3
   MAX REGISTER:      1                        HIGH INPUT LIMIT: 1
```

MIN ENTRY:	0.3	DEFAULT:	0.301
MAX ENTRY:	1		

```
SCREEN #039: DATA DISPLAY                          íëëëëëëëëëëëëëëëëëëëë¡
                                                   °INJECTION WATER FLOW°
SCREEN MEMORY USED:   177 BYTES                    ° ÞÞÞÞÞÞ1ÞÞÞÞÞÞ GPM  °
                                                   ° TOTAL VOLUME       °
PREVIOUS MENU:        083                          ° ÞÞ2ÞÞÞ3Þ GALLONS   °
NEXT SCREEN:          001                          åëëëëëëëëëëëëëëëëëëëƒ
PREVIOUS SCREEN:      UNLINKED
DATA POSITION #1:  32 BIT FLOATING POINT DISPLAY

REGISTER:          F90:3
MIN REGISTER:      0.3                    MIN DISPLAY:      0.3
MAX REGISTER:      1                      MAX DISPLAY:      1

DATA POSITION #2:  16 BIT UNSIGNED INTEGER DISPLAY

REGISTER:          C5:5.2                 REGISTER LOW:     0
DECIMAL RIGHT:     0                      REGISTER HIGH:    9999
DECIMAL LEFT:      4                      DISPLAY LOW:      0
NO SIGN PLACE                             DISPLAY HIGH:     9999
LEADING ZEROS NOT SHOWN

DATA POSITION #3:  16 BIT UNSIGNED INTEGER DISPLAY

REGISTER:          C5:4.2                 REGISTER LOW:     0
DECIMAL RIGHT:     0                      REGISTER HIGH:    9999
DECIMAL LEFT:      4                      DISPLAY LOW:      0
NO SIGN PLACE                             DISPLAY HIGH:     9999
SHOW LEADING ZEROS
```

```
SCREEN #040: SUB-MENU                              íëëëëëëëëëëëëëëëëëëëë¡
                                                   °        ALARMS      °
SCREEN MEMORY USED:   88 BYTES                     °1. 1-4   | 4. 13-16 °
PREVIOUS MENU:   001                               °2. 5-8   | 5. 17-20 °
                                                   °3. 9-12  | 6. 21-UP °
                                                   åëëëëëëëëëëëëëëëëëëëƒ

Item/Key # 1  links to screen 041      Item/Key # 5  links to screen 045
Item/Key # 2  links to screen 042      Item/Key # 6  links to screen 046
Item/Key # 3  links to screen 043      Item/Key # 7  is unlinked
Item/Key # 4  links to screen 044      Item/Key # 8  is unlinked
```

```
SCREEN #041: DATA DISPLAY                        íëëëëëëëëëëëëëëëëëëëë¡
                                                 °1 XFR Pressure ÞÞ1Þ °
SCREEN MEMORY USED:    181 BYTES                 °2 XFR Pressure ÞÞ2Þ °
                                                 °3 Flush Press  ÞÞ3Þ °
PREVIOUS MENU:         040                       °4 Pump       ÞÞÞ4ÞÞÞ °
NEXT SCREEN:           042                       åëëëëëëëëëëëëëëëëëëëëƒ
PREVIOUS SCREEN:       UNLINKED
```

DATA POSITION #1: BIT DISPLAY

REGISTER:	N20:24	OFF BIT TEXT:	norm
BIT NUMBER:	1	ON BIT TEXT:	LOW
TEXT LENGTH:	4		

DATA POSITION #2: BIT DISPLAY

REGISTER:	N20:24	OFF BIT TEXT:	norm
BIT NUMBER:	2	ON BIT TEXT:	HIGH
TEXT LENGTH:	4		

DATA POSITION #3: BIT DISPLAY

REGISTER:	N20:24	OFF BIT TEXT:	norm
BIT NUMBER:	3	ON BIT TEXT:	HIGH
TEXT LENGTH:	4		

DATA POSITION #4: BIT DISPLAY

REGISTER:	N20:24	OFF BIT TEXT:	norm
BIT NUMBER:	4	ON BIT TEXT:	TROUBLE
TEXT LENGTH:	7		

```
SCREEN #042: DATA DISPLAY                          íëëëëëëëëëëëëëëëëëëëëë¡
                                                   °5 JR-1  ÞÞÞÞÞ1ÞÞÞÞÞ °
SCREEN MEMORY USED:    192 BYTES                   °6 Pump Pit     ÞÞ2Þ °
                                                   °7 Pump Pit  ÞÞÞ3ÞÞÞ °
PREVIOUS MENU:         040                         °8 PMP/JPR HT ÞÞÞ4ÞÞÞ°
NEXT SCREEN:           043                         åëëëëëëëëëëëëëëëëëëëëƒ
PREVIOUS SCREEN:       UNLINKED
DATA POSITION #1:  BIT DISPLAY

REGISTER:          N20:24                OFF BIT TEXT:            norm
BIT NUMBER:        5                     ON BIT TEXT:      NON-PROCESS
TEXT LENGTH:       11

DATA POSITION #2:  BIT DISPLAY

REGISTER:          N20:24                OFF BIT TEXT:     norm
BIT NUMBER:        6                     ON BIT TEXT:      LEAK
TEXT LENGTH:       4

DATA POSITION #3:  BIT DISPLAY

REGISTER:          N20:24                OFF BIT TEXT:        norm
BIT NUMBER:        7                     ON BIT TEXT:      TROUBLE
TEXT LENGTH:       7

DATA POSITION #4:  BIT DISPLAY

REGISTER:          N20:24                OFF BIT TEXT:        norm
BIT NUMBER:        8                     ON BIT TEXT:      TROUBLE
TEXT LENGTH:       7
```

```
SCREEN #043: DATA DISPLAY                       íëëëëëëëëëëëëëëëëëëëë¡
                                                °9 PIC Water     ÞÞ1Þ °
SCREEN MEMORY USED:    183 BYTES                °10 PLC Temp     ÞÞ2Þ °
                                                °11 CMPRSR Temp ÞÞ3Þ °
PREVIOUS MENU:         040                      °12 Jet Pump ÞÞÞÞ4ÞÞÞ°
NEXT SCREEN:           044                      åëëëëëëëëëëëëëëëëëëëëƒ
PREVIOUS SCREEN:       UNLINKED
```

DATA POSITION #1: BIT DISPLAY

REGISTER:	N20:24	OFF BIT TEXT:	norm
BIT NUMBER:	9	ON BIT TEXT:	LOW
TEXT LENGTH:	4		

DATA POSITION #2: BIT DISPLAY

REGISTER:	N20:24	OFF BIT TEXT:	norm
BIT NUMBER:	10	ON BIT TEXT:	HIGH
TEXT LENGTH:	4		

DATA POSITION #3: BIT DISPLAY

REGISTER:	N20:24	OFF BIT TEXT:	norm
BIT NUMBER:	11	ON BIT TEXT:	HIGH
TEXT LENGTH:	4		

DATA POSITION #4: BIT DISPLAY

REGISTER:	N20:24	OFF BIT TEXT:	norm
BIT NUMBER:	12	ON BIT TEXT:	SHUTDOWN
TEXT LENGTH:	8		

```
   SCREEN #044: DATA DISPLAY                             íëëëëëëëëëëëëëëëëëëëë¡
                                                         °13 SGT Level    ÞÞ1Þ °
   SCREEN MEMORY USED:    181 BYTES                      °14 MTR TEMP     ÞÞ2Þ °
                                                         °15 Network   ÞÞÞ3ÞÞÞ °
   PREVIOUS MENU:         040                            °16 JFPT SIGNAL ÞÞ4Þ °
   NEXT SCREEN:           045                            åëëëëëëëëëëëëëëëëëëëëƒ
   PREVIOUS SCREEN:       UNLINKED
DATA POSITION #1:  BIT DISPLAY

   REGISTER:           N20:24                 OFF BIT TEXT:     norm
   BIT NUMBER:         13                     ON BIT TEXT:       LOW
   TEXT LENGTH:        4

DATA POSITION #2:  BIT DISPLAY

   REGISTER:           N20:24                 OFF BIT TEXT:     norm
   BIT NUMBER:         14                     ON BIT TEXT:      HIGH
   TEXT LENGTH:        4

DATA POSITION #3:  BIT DISPLAY

   REGISTER:           N20:24                 OFF BIT TEXT:        norm
   BIT NUMBER:         15                     ON BIT TEXT:      FAILURE
   TEXT LENGTH:        7

DATA POSITION #4:  BIT DISPLAY

   REGISTER:           N20:25                 OFF BIT TEXT:     NORM
   BIT NUMBER:         0                      ON BIT TEXT:      LOST
   TEXT LENGTH:        4
```

```
ááááááááááááááááááááááááááááááááááááááááááááááááááááááááááááááááááááá

   SCREEN #045: DATA DISPLAY                            íëëëëëëëëëëëëëëëëëëëë¡
                                                        °17 BY105 LK/TB ÞÞ1ÞÞ°
   SCREEN MEMORY USED:    182 BYTES                     °18 LD1 LEAK    ÞÞ2ÞÞ °
                                                        °19 LD1 TRB     ÞÞ3ÞÞ °
   PREVIOUS MENU:         040                           °20             ÞÞ4ÞÞ °
   NEXT SCREEN:           046                           åëëëëëëëëëëëëëëëëëëëëƒ
   PREVIOUS SCREEN:       UNLINKED
DATA POSITION #1:  BIT DISPLAY

   REGISTER:           N20:25                   OFF BIT TEXT:      norm
   BIT NUMBER:         1                        ON BIT TEXT:       alarm
   TEXT LENGTH:        5

DATA POSITION #2:  BIT DISPLAY

   REGISTER:           N20:25                   OFF BIT TEXT:      norm
   BIT NUMBER:         2                        ON BIT TEXT:       alarm
   TEXT LENGTH:        5

DATA POSITION #3:  BIT DISPLAY

   REGISTER:           N20:25                   OFF BIT TEXT:      norm
   BIT NUMBER:         3                        ON BIT TEXT:       Alarm
   TEXT LENGTH:        5

DATA POSITION #4:  BIT DISPLAY

   REGISTER:           N20:25                   OFF BIT TEXT:      norm
   BIT NUMBER:         4                        ON BIT TEXT:       alarm
   TEXT LENGTH:        5
```

```
SCREEN #046: DATA DISPLAY                          íëëëëëëëëëëëëëëëëëëëëë¡
                                                   °21 BY106 FLUSH ÞÞ1ÞÞ°
SCREEN MEMORY USED:   182 BYTES                    °22            ÞÞ2ÞÞ °
                                                   °23 BX DCRT    ÞÞ3ÞÞ °
PREVIOUS MENU:        040                          °24            ÞÞ4ÞÞ °
NEXT SCREEN:          048                          åëëëëëëëëëëëëëëëëëëëëëƒ
PREVIOUS SCREEN:      UNLINKED
```

DATA POSITION #1: BIT DISPLAY

REGISTER:	N20:25	OFF BIT TEXT:	norm
BIT NUMBER:	5	ON BIT TEXT:	Alarm
TEXT LENGTH:	5		

DATA POSITION #2: BIT DISPLAY

REGISTER:	N20:25	OFF BIT TEXT:	norm
BIT NUMBER:	6	ON BIT TEXT:	Alarm
TEXT LENGTH:	5		

DATA POSITION #3: BIT DISPLAY

REGISTER:	N20:25	OFF BIT TEXT:	norm
BIT NUMBER:	7	ON BIT TEXT:	Alarm
TEXT LENGTH:	5		

DATA POSITION #4: BIT DISPLAY

REGISTER:	N20:25	OFF BIT TEXT:	norm
BIT NUMBER:	8	ON BIT TEXT:	Alarm
TEXT LENGTH:	5		

```
SCREEN #048: DATA DISPLAY                    íëëëëëëëëëëëëëëëëëëëëëë¡
                                             °25            ÞÞ1ÞÞ °
SCREEN MEMORY USED:   178 BYTES              °26            ÞÞ2Þ  °
                                             °27            ÞÞ3ÞÞ °
PREVIOUS MENU:        040                    °28            ÞÞ4Þ  °
NEXT SCREEN:          050                    åëëëëëëëëëëëëëëëëëëëëëƒ
PREVIOUS SCREEN:      046
DATA POSITION #1:  BIT DISPLAY

REGISTER:          N20:25              OFF BIT TEXT:     NORM
BIT NUMBER:        9                   ON BIT TEXT:      ALARM
TEXT LENGTH:       5

DATA POSITION #2:  BIT DISPLAY

REGISTER:          N20:25              OFF BIT TEXT:     norm
BIT NUMBER:        10                  ON BIT TEXT:      Leak
TEXT LENGTH:       4

DATA POSITION #3:  BIT DISPLAY

REGISTER:          N20:25              OFF BIT TEXT:     norm
BIT NUMBER:        11                  ON BIT TEXT:      Alarm
TEXT LENGTH:       5

DATA POSITION #4:  BIT DISPLAY

REGISTER:          N20:25              OFF BIT TEXT:     norm
BIT NUMBER:        12                  ON BIT TEXT:      Leak
TEXT LENGTH:       4
```

```
SCREEN #050: DATA DISPLAY                    íëëëëëëëëëëëëëëëëëëëëëë¡
                                             °29            ÞÞ1ÞÞ °
SCREEN MEMORY USED:   141 BYTES              °30                   °
                                             °31            ÞÞ2ÞÞ °
PREVIOUS MENU:        UNLINKED               °32            ÞÞ3ÞÞ °
NEXT SCREEN:          052                    åëëëëëëëëëëëëëëëëëëëëëƒ
PREVIOUS SCREEN:      048
DATA POSITION #1:  BIT DISPLAY

REGISTER:          N20:25              OFF BIT TEXT:     norm
BIT NUMBER:        13                  ON BIT TEXT:      Alarm
TEXT LENGTH:       5

DATA POSITION #2:  BIT DISPLAY

REGISTER:          N20:25              OFF BIT TEXT:     norm
BIT NUMBER:        14                  ON BIT TEXT:      Alarm
TEXT LENGTH:       5

DATA POSITION #3:  BIT DISPLAY

REGISTER:          N20:25              OFF BIT TEXT:     norm
BIT NUMBER:        15                  ON BIT TEXT:      Alarm
TEXT LENGTH:       5
```

ááá

```
SCREEN #052: DATA DISPLAY                         íêêêêêêêêêêêêêêêêêêêêë;
                                                  °33 BY106 LK/TB ÞÞ1ÞÞ°
SCREEN MEMORY USED:   182 BYTES                   °34             ÞÞ2ÞÞ °
                                                  °35             ÞÞ3ÞÞ °
PREVIOUS MENU:        UNLINKED                    °36 DILUTIN FLOW ÞÞ4Þ°
NEXT SCREEN:          053                         åêêêêêêêêêêêêêêêêêêêêêƒ
PREVIOUS SCREEN:      UNLINKED
```

DATA POSITION #1: BIT DISPLAY

REGISTER:	N20:51	OFF BIT TEXT:	NORM
BIT NUMBER:	0	ON BIT TEXT:	ALARM
TEXT LENGTH:	5		

DATA POSITION #2: BIT DISPLAY

REGISTER:	N20:51	OFF BIT TEXT:	norm
BIT NUMBER:	1	ON BIT TEXT:	Alarm
TEXT LENGTH:	5		

DATA POSITION #3: BIT DISPLAY

REGISTER:	N20:51	OFF BIT TEXT:	norm
BIT NUMBER:	2	ON BIT TEXT:	Alarm
TEXT LENGTH:	5		

DATA POSITION #4: BIT DISPLAY

REGISTER:	N20:51	OFF BIT TEXT:	norm
BIT NUMBER:	3	ON BIT TEXT:	LOW
TEXT LENGTH:	4		

SCREEN #053: DATA DISPLAY

SCREEN MEMORY USED: 181 BYTES

PREVIOUS MENU: UNLINKED
NEXT SCREEN: 054
PREVIOUS SCREEN: 052

```
íëëëëëëëëëëëëëëëëëëëë¡
°37              ÞÞ1Þ °
°38             ÞÞ2ÞÞ °
°39 INJECTIN WTR ÞÞ3Þ°
°40 PWR MONITOR ÞÞ4ÞÞ°
åëëëëëëëëëëëëëëëëëëëëƒ
```

DATA POSITION #1: BIT DISPLAY

REGISTER:	N20:51	OFF BIT TEXT:	norm
BIT NUMBER:	4	ON BIT TEXT:	HIGH
TEXT LENGTH:	4		

DATA POSITION #2: BIT DISPLAY

REGISTER:	N20:51	OFF BIT TEXT:	norm
BIT NUMBER:	5	ON BIT TEXT:	Alarm
TEXT LENGTH:	5		

DATA POSITION #3: BIT DISPLAY

REGISTER:	N20:51	OFF BIT TEXT:	norm
BIT NUMBER:	6	ON BIT TEXT:	LOW
TEXT LENGTH:	4		

DATA POSITION #4: BIT DISPLAY

REGISTER:	N20:51	OFF BIT TEXT:	norm
BIT NUMBER:	7	ON BIT TEXT:	Alarm
TEXT LENGTH:	5		

SCREEN #054: DATA DISPLAY

```
íëëëëëëëëëëëëëëëëëëëë¡
°41            ÞÞ1ÞÞ °
°42            ÞÞ2ÞÞ °
°43            ÞÞ3ÞÞ °
°44            ÞÞ4ÞÞ °
åëëëëëëëëëëëëëëëëëëëëƒ
```

SCREEN MEMORY USED: 182 BYTES

PREVIOUS MENU: UNLINKED
NEXT SCREEN: 055
PREVIOUS SCREEN: 053

DATA POSITION #1: BIT DISPLAY

REGISTER: N20:51 OFF BIT TEXT: norm
BIT NUMBER: 8 ON BIT TEXT: Alarm
TEXT LENGTH: 5

DATA POSITION #2: BIT DISPLAY

REGISTER: N20:51 OFF BIT TEXT: norm
BIT NUMBER: 9 ON BIT TEXT: Alarm
TEXT LENGTH: 5

DATA POSITION #3: BIT DISPLAY

REGISTER: N20:51 OFF BIT TEXT: norm
BIT NUMBER: 10 ON BIT TEXT: Alarm
TEXT LENGTH: 5

DATA POSITION #4: BIT DISPLAY

REGISTER: N20:51 OFF BIT TEXT: norm
BIT NUMBER: 11 ON BIT TEXT: Alarm
TEXT LENGTH: 5

```
SCREEN #055: DATA DISPLAY                          íëëëëëëëëëëëëëëëëëëëë¡
                                                   °45 BY106 JF SIG ÞÞ1Þ°
SCREEN MEMORY USED:    180 BYTES                   °46           ÞÞ2ÞÞ °
                                                   °47            ÞÞ3Þ °
PREVIOUS MENU:         UNLINKED                    °48           ÞÞ4ÞÞ °
NEXT SCREEN:           056                         åëëëëëëëëëëëëëëëëëëëëƒ
PREVIOUS SCREEN:       054
```

DATA POSITION #1: BIT DISPLAY

REGISTER:	N20:51	OFF BIT TEXT:	norm
BIT NUMBER:	12	ON BIT TEXT:	LOSS
TEXT LENGTH:	4		

DATA POSITION #2: BIT DISPLAY

REGISTER:	N20:51	OFF BIT TEXT:	norm
BIT NUMBER:	13	ON BIT TEXT:	Alarm
TEXT LENGTH:	5		

DATA POSITION #3: BIT DISPLAY

REGISTER:	N20:51	OFF BIT TEXT:	norm
BIT NUMBER:	14	ON BIT TEXT:	LOSS
TEXT LENGTH:	4		

DATA POSITION #4: BIT DISPLAY

REGISTER:	N20:51	OFF BIT TEXT:	norm
BIT NUMBER:	15	ON BIT TEXT:	Alarm
TEXT LENGTH:	5		

SCREEN #056: DATA DISPLAY

SCREEN MEMORY USED: 180 BYTES

PREVIOUS MENU: UNLINKED
NEXT SCREEN: 057
PREVIOUS SCREEN: 055

```
°49 WTR CAB TEMP ÞÞ1Þ°
°50 WFIE TEMP   ÞÞ2Þ °
°51 Unused     ÞÞ3ÞÞ °
°52 Unused     ÞÞ4ÞÞ °
```

DATA POSITION #1: BIT DISPLAY

REGISTER:	N20:52	OFF BIT TEXT:	norm
BIT NUMBER:	0	ON BIT TEXT:	LOW
TEXT LENGTH:	4		

DATA POSITION #2: BIT DISPLAY

REGISTER:	N20:52	OFF BIT TEXT:	norm
BIT NUMBER:	1	ON BIT TEXT:	LOW
TEXT LENGTH:	4		

DATA POSITION #3: BIT DISPLAY

REGISTER:	N20:52	OFF BIT TEXT:	norm
BIT NUMBER:	2	ON BIT TEXT:	Alarm
TEXT LENGTH:	5		

DATA POSITION #4: BIT DISPLAY

REGISTER:	N20:52	OFF BIT TEXT:	norm
BIT NUMBER:	3	ON BIT TEXT:	Alarm
TEXT LENGTH:	5		

```
SCREEN #057: DATA DISPLAY                    íëëëëëëëëëëëëëëëëëëëëëë¡
                                             °53            ÞÞ1ÞÞ °
SCREEN MEMORY USED:   181 BYTES              °54 BY106 FL PR ÞÞ2Þ °
                                             °55            ÞÞ3ÞÞ °
PREVIOUS MENU:        UNLINKED               °56            ÞÞ4ÞÞ °
NEXT SCREEN:          058                    åëëëëëëëëëëëëëëëëëëëëëƒ
PREVIOUS SCREEN:      056
DATA POSITION #1:  BIT DISPLAY

REGISTER:          N20:52              OFF BIT TEXT:     norm
BIT NUMBER:        4                   ON BIT TEXT:      Alarm
TEXT LENGTH:       5

DATA POSITION #2:  BIT DISPLAY

REGISTER:          N20:52              OFF BIT TEXT:     norm
BIT NUMBER:        5                   ON BIT TEXT:      HIGH
TEXT LENGTH:       4

DATA POSITION #3:  BIT DISPLAY

REGISTER:          N20:52              OFF BIT TEXT:     norm
BIT NUMBER:        6                   ON BIT TEXT:      Alarm
TEXT LENGTH:       5

DATA POSITION #4:  BIT DISPLAY

REGISTER:          N20:52              OFF BIT TEXT:     norm
BIT NUMBER:        7                   ON BIT TEXT:      Alarm
TEXT LENGTH:       5
```

```
SCREEN #058: DATA DISPLAY                    íëëëëëëëëëëëëëëëëëëëëëë¡
                                             °57 BY106 SHTDN ÞÞ1ÞÞ°
SCREEN MEMORY USED:   138 BYTES              °58 PMP BEARING ÞÞ2ÞÞ°
                                             °59 MTR WNDG TMP ÞÞ3Þ°
PREVIOUS MENU:        UNLINKED               °                    °
NEXT SCREEN:          UNLINKED               åëëëëëëëëëëëëëëëëëëëëëƒ
PREVIOUS SCREEN:      057
DATA POSITION #1:  BIT DISPLAY

REGISTER:          N20:52              OFF BIT TEXT:     norm
BIT NUMBER:        8                   ON BIT TEXT:      Alarm
TEXT LENGTH:       5

DATA POSITION #2:  BIT DISPLAY

REGISTER:          N20:52              OFF BIT TEXT:     NORM
BIT NUMBER:        9                   ON BIT TEXT:      ALARM
TEXT LENGTH:       5

DATA POSITION #3:  BIT DISPLAY

REGISTER:          N20:52              OFF BIT TEXT:     NORM
BIT NUMBER:        10                  ON BIT TEXT:      HIGH
TEXT LENGTH:       4
```

ááá

```
   SCREEN #080: DATA ENTRY                                   íëëëëëëëëëëëëëëëëëëëë¡
                                                             º  MAX FLOW          º
   SCREEN MEMORY USED:   160 BYTES                           º ÞÞÞÞÞÞ1ÞÞÞÞÞÞ GPM  º
                                                             º NEW MAX FLOW       º
   PREVIOUS MENU:        034                                 º ÞÞÞÞÞÞ2ÞÞÞÞÞÞ GPM  º
   NEXT SCREEN:          034                                 åëëëëëëëëëëëëëëëëëëëëƒ
   PREVIOUS SCREEN:      UNLINKED
DATA POSITION #1:  32 BIT FLOATING POINT DISPLAY

   REGISTER:          F8:24
   MIN REGISTER:      0.32                      MIN DISPLAY:      0.32
   MAX REGISTER:      4.6                       MAX DISPLAY:      4.6

DATA POSITION #2:  32 BIT FLOATING POINT ENTRY

   REGISTER:          F8:24
   MIN REGISTER:      0.32                      LOW INPUT LIMIT:  0.32
   MAX REGISTER:      4.6                       HIGH INPUT LIMIT: 4.6
   MIN ENTRY:         0.32                      DEFAULT:          NONE
   MAX ENTRY:         4.6
```

ááá

```
   SCREEN #082: DATA DISPLAY                                 íëëëëëëëëëëëëëëëëëëëë¡
                                                             º     SETPOINTS      º
   SCREEN MEMORY USED:   124 BYTES                           ºJUMPER HTR:   ÞÞ1Þ Fº
                                                             ºPUMPASSY HTR: ÞÞ2Þ Fº
   PREVIOUS MENU:        085                                 º                    º
   NEXT SCREEN:          001                                 åëëëëëëëëëëëëëëëëëëëëƒ
   PREVIOUS SCREEN:      UNLINKED
DATA POSITION #1:  16 BIT SIGNED INTEGER DISPLAY

   REGISTER:          N31:4                     REGISTER LOW:     -454
   DECIMAL RIGHT:     0                         REGISTER HIGH:    752
   DECIMAL LEFT:      3                         DISPLAY LOW:      -454
   SHOW SIGN                                    DISPLAY HIGH:     752
   LEADING ZEROS NOT SHOWN

DATA POSITION #2:  16 BIT SIGNED INTEGER DISPLAY

   REGISTER:          N31:17                    REGISTER LOW:     -454
   DECIMAL RIGHT:     0                         REGISTER HIGH:    752
   DECIMAL LEFT:      3                         DISPLAY LOW:      -454
   SHOW SIGN                                    DISPLAY HIGH:     752
   LEADING ZEROS NOT SHOWN
```

ááá

```
   SCREEN #083: SUB-MENU                                     íëëëëëëëëëëëëëëëëëëëë¡
                                                             º1 VIEW TOTAL INJ WTRº
   SCREEN MEMORY USED:   54 BYTES                            º2 RESET TOTALIZER   º
   PREVIOUS MENU:   008                                      º                    º
                                                             º                    º
                                                             åëëëëëëëëëëëëëëëëëëëëƒ

   Item/Key # 1  links to screen 039        Item/Key # 5  is unlinked
   Item/Key # 2  links to screen 086        Item/Key # 6  is unlinked
```

```
Item/Key # 3  is unlinked                Item/Key # 7  is unlinked
Item/Key # 4  is unlinked                Item/Key # 8  is unlinked
```

```
SCREEN #084: DATA ENTRY                          íëëëëëëëëëëëëëëëëëëëë¡
                                                 °PUMPASSY TEMP: ÞÞ1ÞF°
SCREEN MEMORY USED:   167 BYTES                  °                    °
                                                 °OLD SETPOINT: ÞÞ2Þ F°
PREVIOUS MENU:        085                        °NEW SETPOINT: ÞÞ3Þ F°
NEXT SCREEN:          082                        åëëëëëëëëëëëëëëëëëëëƒ
PREVIOUS SCREEN:      032
DATA POSITION #1:  16 BIT SIGNED INTEGER DISPLAY

REGISTER:          N60:34                REGISTER LOW:     -454
DECIMAL RIGHT:     0                     REGISTER HIGH:    752
DECIMAL LEFT:      3                     DISPLAY LOW:      -454
SHOW SIGN                                DISPLAY HIGH:     752
LEADING ZEROS NOT SHOWN

DATA POSITION #2:  16 BIT SIGNED INTEGER DISPLAY

REGISTER:          N31:17                REGISTER LOW:     -454
DECIMAL RIGHT:     0                     REGISTER HIGH:    752
DECIMAL LEFT:      3                     DISPLAY LOW:      -454
SHOW SIGN                                DISPLAY HIGH:     752
LEADING ZEROS NOT SHOWN

DATA POSITION #3:  16 BIT SIGNED INTEGER ENTRY

REGISTER:          N31:17                REGISTER LOW:     -454
DECIMAL RIGHT:     0                     REGISTER HIGH:    752
DECIMAL LEFT:      3                     DISPLAY LOW:      -454
SHOW SIGN                                DISPLAY HIGH:     752
DEFAULT:           NONE                  LOW INPUT LIMIT:  -454
                                         HIGH INPUT LIMIT: 752

SCREEN #085: SUB-MENU                            íëëëëëëëëëëëëëëëëëëëë¡
                                                 °      SETPOINTS     °
SCREEN MEMORY USED:   44 BYTES                   °1 SET               °
PREVIOUS MENU:   030                             °2 VIEW              °
                                                 °                    °
                                                 åëëëëëëëëëëëëëëëëëëëƒ

Item/Key # 1  links to screen 032        Item/Key # 5  is unlinked
Item/Key # 2  links to screen 082        Item/Key # 6  is unlinked
Item/Key # 3  is unlinked                Item/Key # 7  is unlinked
Item/Key # 4  is unlinked                Item/Key # 8  is unlinked

SCREEN #086: SECURITY                            íëëëëëëëëëëëëëëëëëëëë¡
                                                 °*RESTRICTED  ACCESS*°
SCREEN MEMORY USED:   61 BYTES                   °     ENTER CODE     °
                                                 °     :              °
PREVIOUS MENU:        083                        °                    °
NEXT SCREEN:          087                        åëëëëëëëëëëëëëëëëëëëƒ
PREVIOUS SCREEN:      UNLINKED
SECURITY CODE #1:  13??????
SECURITY CODE #2:  27??????
SECURITY CODE #3:  55??????
```

```
áááááááááááááááááááááááááááááááááááááááááááááááááááááááááááááááááááááááááááááááá

   SCREEN #087: DATA ENTRY                                     íëëëëëëëëëëëëëëëëëëëë¡
                                                               ° RESET TOTALIZER TO °
   SCREEN MEMORY USED:    76 BYTES                             °        ZERO        °
                                                               °PRESS 1 TO RESET 1  °
   PREVIOUS MENU:         UNLINKED                             °                    °
   NEXT SCREEN:           039                                  åëëëëëëëëëëëëëëëëëëëëƒ
   PREVIOUS SCREEN:       UNLINKED
DATA POSITION #1: BIT ENTRY

   REGISTER:          N20:14                            ENTRY FORMAT:      1 & 0 KEYS
   BIT NUMBER:        1                                 DEFAULT:           NONE

áááááááááááááááááááááááááááááááááááááááááááááááááááááááááááááááááááááááááááááááá

   SCREEN #100: ALARM                                          íëëëëëëëëëëëëëëëëëëëë¡
                                                               ° ACKNOWLEDGE STROBE °
   SCREEN MEMORY USED:    68 BYTES                             °                    °
                                                               °                    °
                                                               ° PRESS 'Y' TO CLEAR °
                                                               åëëëëëëëëëëëëëëëëëëëëƒ

   ACKNOWLEDGE ALARM TO REGISTER:  N12:0
   BIT NUMBER:                     0
   BIT WILL BE:                    SET.

áááááááááááááááááááááááááááááááááááááááááááááááááááááááááááááááááááááááááááááááá

   SCREEN #101: ALARM                                          íëëëëëëëëëëëëëëëëëëëë¡
                                                               °      Alarm 1       °
   SCREEN MEMORY USED:    79 BYTES                             ° XFR Pressure LOW   °
                                                               °                    °
                                                               ° PRESS 'Y' TO CLEAR °
                                                               åëëëëëëëëëëëëëëëëëëëëƒ

   ACKNOWLEDGE ALARM TO REGISTER:  N12:0
   BIT NUMBER:                     1
   BIT WILL BE:                    SET.

áááááááááááááááááááááááááááááááááááááááááááááááááááááááááááááááááááááááááááááááá

   SCREEN #102: ALARM                                          íëëëëëëëëëëëëëëëëëëëë¡
                                                               °       Alarm 2      °
   SCREEN MEMORY USED:    81 BYTES                             ° XFR Pressure HIGH  °
                                                               °                    °
                                                               ° PRESS 'Y' TO CLEAR °
                                                               åëëëëëëëëëëëëëëëëëëëëƒ

   ACKNOWLEDGE ALARM TO REGISTER:  N12:0
   BIT NUMBER:                     2
   BIT WILL BE:                    SET.
```

```
ááááááááááááááááááááááááááááááááááááááááááááááááááááááááááááááááááááááááááááááá

   SCREEN #103: ALARM                                      íëëëëëëëëëëëëëëëëëëëëë¡
                                                           °       Alarm 3        °
   SCREEN MEMORY USED:    81 BYTES                         ° Flush Pressure HI    °
                                                           °                      °
                                                           ° PRESS 'Y' TO CLEAR   °
                                                           åëëëëëëëëëëëëëëëëëëëëëƒ

   ACKNOWLEDGE ALARM TO REGISTER:   N12:0
   BIT NUMBER:                      3
   BIT WILL BE:                     SET.

ááááááááááááááááááááááááááááááááááááááááááááááááááááááááááááááááááááááááááááááá

   SCREEN #104: ALARM                                      íëëëëëëëëëëëëëëëëëëëëë¡
                                                           °       Alarm 4        °
   SCREEN MEMORY USED:    81 BYTES                         °  JET PUMP TROUBLE    °
                                                           °                      °
                                                           ° PRESS 'Y' TO CLEAR   °
                                                           åëëëëëëëëëëëëëëëëëëëëëƒ

   ACKNOWLEDGE ALARM TO REGISTER:   N12:0
   BIT NUMBER:                      4
   BIT WILL BE:                     SET.

ááááááááááááááááááááááááááááááááááááááááááááááááááááááááááááááááááááááááááááááá

   SCREEN #105: ALARM                                      íëëëëëëëëëëëëëëëëëëëëë¡
                                                           °       Alarm 5        °
   SCREEN MEMORY USED:    93 BYTES                         °    JR-1 Position     °
                                                           °     NON-PROCESS      °
                                                           ° PRESS 'Y' TO CLEAR   °
                                                           åëëëëëëëëëëëëëëëëëëëëëƒ

   ACKNOWLEDGE ALARM TO REGISTER:   N12:0
   BIT NUMBER:                      5
   BIT WILL BE:                     SET.

ááááááááááááááááááááááááááááááááááááááááááááááááááááááááááááááááááááááááááááááá

   SCREEN #106: ALARM                                      íëëëëëëëëëëëëëëëëëëëëë¡
                                                           °       Alarm 6        °
   SCREEN MEMORY USED:    79 BYTES                         °   PUMP PIT  LEAK     °
                                                           °                      °
                                                           ° PRESS 'Y' TO CLEAR   °
                                                           åëëëëëëëëëëëëëëëëëëëëëƒ

   ACKNOWLEDGE ALARM TO REGISTER:   N12:0
   BIT NUMBER:                      6
   BIT WILL BE:                     SET.
```

```
SCREEN #107: ALARM                                   íëëëëëëëëëëëëëëëëëëëë¡
                                                     °       Alarm 7        °
SCREEN MEMORY USED:    90 BYTES                      °  PUMP PIT LEAK       °
                                                     °       TROUBLE        °
                                                     ° PRESS 'Y' TO CLEAR   °
                                                     åëëëëëëëëëëëëëëëëëëëëƒ

ACKNOWLEDGE ALARM TO REGISTER:  N12:0
BIT NUMBER:                     7
BIT WILL BE:                    SET.
```

```
SCREEN #108: ALARM                                   íëëëëëëëëëëëëëëëëëëëë¡
                                                     °       Alarm 8        °
SCREEN MEMORY USED:    92 BYTES                      ° PUMP/JUMPER TEMP     °
                                                     °       TROUBLE        °
                                                     ° PRESS 'Y' TO CLEAR   °
                                                     åëëëëëëëëëëëëëëëëëëëëƒ

ACKNOWLEDGE ALARM TO REGISTER:  N12:0
BIT NUMBER:                     8
BIT WILL BE:                    SET.
```

```
SCREEN #109: ALARM                                   íëëëëëëëëëëëëëëëëëëëë¡
                                                     °       Alarm 9        °
SCREEN MEMORY USED:    81 BYTES                      °PIC Water Level LOW   °
                                                     °                      °
                                                     ° PRESS 'Y' TO CLEAR   °
                                                     åëëëëëëëëëëëëëëëëëëëëƒ

ACKNOWLEDGE ALARM TO REGISTER:  N12:0
BIT NUMBER:                     9
BIT WILL BE:                    SET.
```

```
SCREEN #110: ALARM                                   íëëëëëëëëëëëëëëëëëëëë¡
                                                     °       Alarm 10       °
SCREEN MEMORY USED:    81 BYTES                      °  PLC Enclosure HI    °
                                                     °                      °
                                                     ° PRESS 'Y' TO CLEAR   °
                                                     åëëëëëëëëëëëëëëëëëëëëƒ

ACKNOWLEDGE ALARM TO REGISTER:  N12:0
BIT NUMBER:                     10
BIT WILL BE:                    SET.
```

```
áááááááááááááááááááááááááááááááááááááááááááááááááááááááááááááááááááááááááááááááá

   SCREEN #111: ALARM                                   íëëëëëëëëëëëëëëëëëëëëë¡
                                                        °      Alarm 11       °
   SCREEN MEMORY USED:   92 BYTES                       °Air Compressor Temp  °
                                                        °         HI          °
                                                        ° PRESS 'Y' TO CLEAR  °
                                                        åëëëëëëëëëëëëëëëëëëëëëƒ

   ACKNOWLEDGE ALARM TO REGISTER:  N12:0
   BIT NUMBER:                     11
   BIT WILL BE:                    SET.

áááááááááááááááááááááááááááááááááááááááááááááááááááááááááááááááááááááááááááááááá

   SCREEN #112: ALARM                                   íëëëëëëëëëëëëëëëëëëëëë¡
                                                        °      Alarm 12       °
   SCREEN MEMORY USED:   81 BYTES                       ° JET PUMP SHUTDOWN   °
                                                        °                     °
                                                        ° PRESS 'Y' TO CLEAR  °
                                                        åëëëëëëëëëëëëëëëëëëëëëƒ

   ACKNOWLEDGE ALARM TO REGISTER:  N12:0
   BIT NUMBER:                     12
   BIT WILL BE:                    SET.

áááááááááááááááááááááááááááááááááááááááááááááááááááááááááááááááááááááááááááááááá

   SCREEN #113: ALARM                                   íëëëëëëëëëëëëëëëëëëëëë¡
                                                        °      Alarm 13       °
   SCREEN MEMORY USED:   76 BYTES                       °      SGT LOW        °
                                                        °                     °
                                                        ° PRESS 'Y' TO CLEAR  °
                                                        åëëëëëëëëëëëëëëëëëëëëëƒ

   ACKNOWLEDGE ALARM TO REGISTER:  N12:0
   BIT NUMBER:                     13
   BIT WILL BE:                    SET.

áááááááááááááááááááááááááááááááááááááááááááááááááááááááááááááááááááááááááááááááá

   SCREEN #114: ALARM                                   íëëëëëëëëëëëëëëëëëëëëë¡
                                                        °      Alarm 14       °
   SCREEN MEMORY USED:   95 BYTES                       °MOTOR WINDING HIGH   °
                                                        °  TEMP SHUTDOWN      °
                                                        °Press 'Y' to Clear   °
                                                        åëëëëëëëëëëëëëëëëëëëëëƒ

   ACKNOWLEDGE ALARM TO REGISTER:  N12:0
   BIT NUMBER:                     14
   BIT WILL BE:                    SET.
```

```
áááááááááááááááááááááááááááááááááááááááááááááááááááááááááááááááááááááááá

   SCREEN #115: ALARM                              íëëëëëëëëëëëëëëëëëëëë¡
                                                   °      ALARM 15      °
   SCREEN MEMORY USED:    95 BYTES                 ° PLC Communications °
                                                   °      FAILURE       °
                                                   ° Press 'Y' to Clear °
                                                   åëëëëëëëëëëëëëëëëëëëëƒ

   ACKNOWLEDGE ALARM TO REGISTER:  N12:0
   BIT NUMBER:                     15
   BIT WILL BE:                    SET.

áááááááááááááááááááááááááááááááááááááááááááááááááááááááááááááááááááááááá

   SCREEN #116: ALARM                              íëëëëëëëëëëëëëëëëëëëë¡
                                                   °      Alarm 16      °
   SCREEN MEMORY USED:    93 BYTES                 °  JFPT SIGNAL LOSS  °
                                                   °       ALARM        °
                                                   ° PRESS 'Y' TO CLEAR °
                                                   åëëëëëëëëëëëëëëëëëëëëƒ

   ACKNOWLEDGE ALARM TO REGISTER:  N12:1
   BIT NUMBER:                     0
   BIT WILL BE:                    SET.

áááááááááááááááááááááááááááááááááááááááááááááááááááááááááááááááááááááááá

   SCREEN #117: ALARM                              íëëëëëëëëëëëëëëëëëëëë¡
                                                   °      Alarm 17      °
   SCREEN MEMORY USED:    92 BYTES                 °  BY-105 LEAK OR    °
                                                   °      TROUBLE       °
                                                   ° PRESS 'Y' TO CLEAR °
                                                   åëëëëëëëëëëëëëëëëëëëëƒ

   ACKNOWLEDGE ALARM TO REGISTER:  N12:1
   BIT NUMBER:                     1
   BIT WILL BE:                    SET.

áááááááááááááááááááááááááááááááááááááááááááááááááááááááááááááááááááááááá

   SCREEN #118: ALARM                              íëëëëëëëëëëëëëëëëëëëë¡
                                                   °      Alarm 18      °
   SCREEN MEMORY USED:    91 BYTES                 °  LEAK DETECTOR 1   °
                                                   °        LEAK        °
                                                   ° PRESS 'Y' TO CLEAR °
                                                   åëëëëëëëëëëëëëëëëëëëëƒ

   ACKNOWLEDGE ALARM TO REGISTER:  N12:1
   BIT NUMBER:                     2
   BIT WILL BE:                    SET.
```

```
ááááááááááááááááááááááááááááááááááááááááááááááááááááááááááááááááááááááá

   SCREEN #119: ALARM                                  íëëëëëëëëëëëëëëëëëëëëë¡
                                                       °       Alarm 19      °
   SCREEN MEMORY USED:    92 BYTES                     °  LEAK DETECTOR 1    °
                                                       °      TROUBLE        °
                                                       °  PRESS Y TO CLEAR   °
                                                       åëëëëëëëëëëëëëëëëëëëëëƒ

   ACKNOWLEDGE ALARM TO REGISTER:   N12:1
   BIT NUMBER:                      3
   BIT WILL BE:                     SET.

ááááááááááááááááááááááááááááááááááááááááááááááááááááááááááááááááááááááá

   SCREEN #120: ALARM                                  íëëëëëëëëëëëëëëëëëëëëë¡
                                                       °       Alarm 20      °
   SCREEN MEMORY USED:    63 BYTES                     °                     °
                                                       °                     °
                                                       ° PRESS 'Y' TO CLEAR  °
                                                       åëëëëëëëëëëëëëëëëëëëëëƒ

   ACKNOWLEDGE ALARM TO REGISTER:   N12:1
   BIT NUMBER:                      4
   BIT WILL BE:                     SET.

ááááááááááááááááááááááááááááááááááááááááááááááááááááááááááááááááááááááá

   SCREEN #121: ALARM                                  íëëëëëëëëëëëëëëëëëëëëë¡
                                                       °       Alarm 21      °
   SCREEN MEMORY USED:    94 BYTES                     °  BY-106 IN FLUSH    °
                                                       °      POSITION       °
                                                       ° PRESS 'Y' TO CLEAR  °
                                                       åëëëëëëëëëëëëëëëëëëëëëƒ

   ACKNOWLEDGE ALARM TO REGISTER:   N12:1
   BIT NUMBER:                      5
   BIT WILL BE:                     SET.

ááááááááááááááááááááááááááááááááááááááááááááááááááááááááááááááááááááááá

   SCREEN #122: ALARM                                  íëëëëëëëëëëëëëëëëëëëëë¡
                                                       °       Alarm 22      °
   SCREEN MEMORY USED:    63 BYTES                     °                     °
                                                       °                     °
                                                       ° PRESS 'Y' TO CLEAR  °
                                                       åëëëëëëëëëëëëëëëëëëëëëƒ

   ACKNOWLEDGE ALARM TO REGISTER:   N12:1
   BIT NUMBER:                      6
   BIT WILL BE:                     SET.
```

```
áááááááááááááááááááááááááááááááááááááááááááááááááááááááááááááááááááááááá

   SCREEN #123: ALARM                                 íëëëëëëëëëëëëëëëëëëëë¡
                                                      °      ALARM 23       °
   SCREEN MEMORY USED:    96 BYTES                    ° 244-BX-DCRT ALARMS  °
                                                      °     ACTIVATED       °
                                                      ° PRESS 'Y' TO CLEAR  °
                                                      åëëëëëëëëëëëëëëëëëëëëƒ

   ACKNOWLEDGE ALARM TO REGISTER:  N12:1
   BIT NUMBER:                     7
   BIT WILL BE:                    SET.

áááááááááááááááááááááááááááááááááááááááááááááááááááááááááááááááááááááááá

   SCREEN #124: ALARM                                 íëëëëëëëëëëëëëëëëëëëë¡
                                                      °     ALARM 24        °
   SCREEN MEMORY USED:    62 BYTES                    °                     °
                                                      °                     °
                                                      ° PRESS 'Y' TO CLEAR  °
                                                      åëëëëëëëëëëëëëëëëëëëëƒ

   ACKNOWLEDGE ALARM TO REGISTER:  N12:1
   BIT NUMBER:                     8
   BIT WILL BE:                    SET.

áááááááááááááááááááááááááááááááááááááááááááááááááááááááááááááááááááááááá

   SCREEN #125: ALARM                                 íëëëëëëëëëëëëëëëëëëëë¡
                                                      °     ALARM 25        °
   SCREEN MEMORY USED:    62 BYTES                    °                     °
                                                      °                     °
                                                      ° PRESS 'Y' TO CLEAR  °
                                                      åëëëëëëëëëëëëëëëëëëëëƒ

   ACKNOWLEDGE ALARM TO REGISTER:  N12:1
   BIT NUMBER:                     9
   BIT WILL BE:                    SET.

áááááááááááááááááááááááááááááááááááááááááááááááááááááááááááááááááááááááá

   SCREEN #126: ALARM                                 íëëëëëëëëëëëëëëëëëëëë¡
                                                      °      ALARM 26       °
   SCREEN MEMORY USED:    63 BYTES                    °                     °
                                                      °                     °
                                                      ° PRESS 'Y' TO CLEAR  °
                                                      åëëëëëëëëëëëëëëëëëëëëƒ

   ACKNOWLEDGE ALARM TO REGISTER:  N12:1
   BIT NUMBER:                     10
   BIT WILL BE:                    SET.
```

áá

SCREEN #127: ALARM

SCREEN MEMORY USED: 63 BYTES

```
íëëëëëëëëëëëëëëëëëëëëë¡
°       ALARM 27      °
°                     °
°                     °
° PRESS 'Y' TO CLEAR  °
åëëëëëëëëëëëëëëëëëëëëëƒ
```

ACKNOWLEDGE ALARM TO REGISTER: N12:1
BIT NUMBER: 11
BIT WILL BE: SET.

áá

SCREEN #128: ALARM

SCREEN MEMORY USED: 63 BYTES

```
íëëëëëëëëëëëëëëëëëëëëë¡
°       ALARM 28      °
°                     °
°                     °
° PRESS 'Y' TO CLEAR  °
åëëëëëëëëëëëëëëëëëëëëëƒ
```

ACKNOWLEDGE ALARM TO REGISTER: N12:1
BIT NUMBER: 12
BIT WILL BE: SET.

áá

SCREEN #129: ALARM

SCREEN MEMORY USED: 63 BYTES

```
íëëëëëëëëëëëëëëëëëëëëë¡
°       ALARM 29      °
°                     °
°                     °
° PRESS 'Y' TO CLEAR  °
åëëëëëëëëëëëëëëëëëëëëëƒ
```

ACKNOWLEDGE ALARM TO REGISTER: N12:1
BIT NUMBER: 13
BIT WILL BE: SET.

áá

SCREEN #130: ALARM

SCREEN MEMORY USED: 63 BYTES

```
íëëëëëëëëëëëëëëëëëëëëë¡
°       ALARM 30      °
°                     °
°                     °
° PRESS 'Y' TO CLEAR  °
åëëëëëëëëëëëëëëëëëëëëëƒ
```

ACKNOWLEDGE ALARM TO REGISTER: N12:0
BIT NUMBER: 0
BIT WILL BE: SET.

```
ááááááááááááááááááááááááááááááááááááááááááááááááááááááááááááááááááááá

   SCREEN #131: ALARM                                  íëëëëëëëëëëëëëëëëëëëë¡
                                                       °     ALARM 31       °
   SCREEN MEMORY USED:   62 BYTES                      °                    °
                                                       °                    °
                                                       ° PRESS 'Y' TO CLEAR °
                                                       åëëëëëëëëëëëëëëëëëëëëƒ

   ACKNOWLEDGE ALARM TO REGISTER:  N12:1
   BIT NUMBER:                     14
   BIT WILL BE:                    SET.

ááááááááááááááááááááááááááááááááááááááááááááááááááááááááááááááááááááá

   SCREEN #132: ALARM                                  íëëëëëëëëëëëëëëëëëëëë¡
                                                       °     ALARM 32       °
   SCREEN MEMORY USED:   62 BYTES                      °                    °
                                                       °                    °
                                                       ° PRESS 'Y' TO CLEAR °
                                                       åëëëëëëëëëëëëëëëëëëëëƒ

   ACKNOWLEDGE ALARM TO REGISTER:  N12:1
   BIT NUMBER:                     15
   BIT WILL BE:                    SET.

ááááááááááááááááááááááááááááááááááááááááááááááááááááááááááááááááááááá

   SCREEN #133: ALARM                                  íëëëëëëëëëëëëëëëëëëëë¡
                                                       °     ALARM 33       °
   SCREEN MEMORY USED:   91 BYTES                      °  BY-106 LEAK OR    °
                                                       °      TROUBLE       °
                                                       ° PRESS 'Y' TO CLEAR °
                                                       åëëëëëëëëëëëëëëëëëëëëƒ

   ACKNOWLEDGE ALARM TO REGISTER:  N12:2
   BIT NUMBER:                     0
   BIT WILL BE:                    SET.

ááááááááááááááááááááááááááááááááááááááááááááááááááááááááááááááááááááá

   SCREEN #134: ALARM                                  íëëëëëëëëëëëëëëëëëëëë¡
                                                       °      ALARM 34      °
   SCREEN MEMORY USED:   63 BYTES                      °                    °
                                                       °                    °
                                                       ° PRESS 'Y' TO CLEAR °
                                                       åëëëëëëëëëëëëëëëëëëëëƒ

   ACKNOWLEDGE ALARM TO REGISTER:  N12:2
   BIT NUMBER:                     1
   BIT WILL BE:                    SET.
```

```
ááááááááááááááááááááááááááááááááááááááááááááááááááááááááááááá

   SCREEN #135: ALARM                            íëëëëëëëëëëëëëëëëëëëë¡
                                                 °      ALARM 35      °
   SCREEN MEMORY USED:   62 BYTES                °                    °
                                                 °                    °
                                                 ° PRESS 'Y' TO CLEAR °
                                                 åëëëëëëëëëëëëëëëëëëëëƒ

   ACKNOWLEDGE ALARM TO REGISTER:  N12:2
   BIT NUMBER:                     2
   BIT WILL BE:                    SET.

ááááááááááááááááááááááááááááááááááááááááááááááááááááááááááááá

   SCREEN #136: ALARM                            íëëëëëëëëëëëëëëëëëëëë¡
                                                 °      ALARM 36      °
   SCREEN MEMORY USED:   90 BYTES                °    DILUTION TANK   °
                                                 °      NO FLOW       °
                                                 ° PRESS 'Y' TO CLEAR °
                                                 åëëëëëëëëëëëëëëëëëëëëƒ

   ACKNOWLEDGE ALARM TO REGISTER:  N12:2
   BIT NUMBER:                     3
   BIT WILL BE:                    SET.

ááááááááááááááááááááááááááááááááááááááááááááááááááááááááááááá

   SCREEN #137: ALARM                            íëëëëëëëëëëëëëëëëëëëë¡
                                                 °      ALARM 37      °
   SCREEN MEMORY USED:   62 BYTES                °                    °
                                                 °                    °
                                                 ° PRESS 'Y' TO CLEAR °
                                                 åëëëëëëëëëëëëëëëëëëëëƒ

   ACKNOWLEDGE ALARM TO REGISTER:  N12:2
   BIT NUMBER:                     4
   BIT WILL BE:                    SET.

ááááááááááááááááááááááááááááááááááááááááááááááááááááááááááááá

   SCREEN #138: ALARM                            íëëëëëëëëëëëëëëëëëëëë¡
                                                 °      ALARM 38      °
   SCREEN MEMORY USED:   62 BYTES                °                    °
                                                 °                    °
                                                 ° PRESS 'Y' TO CLEAR °
                                                 åëëëëëëëëëëëëëëëëëëëëƒ

   ACKNOWLEDGE ALARM TO REGISTER:  N12:2
   BIT NUMBER:                     5
   BIT WILL BE:                    SET.
```

```
áááááááááááááááááááááááááááááááááááááááááááááááááááááááááááááááááááááááááááááááá

   SCREEN #139: ALARM                                     íëëëëëëëëëëëëëëëëëëëëë¡
                                                          °       ALARM 39       °
   SCREEN MEMORY USED:   95 BYTES                         °  PUMP INJECTION      °
                                                          °  WATER LOW FLOW      °
                                                          ° PRESS 'Y' TO CLEAR   °
                                                          åëëëëëëëëëëëëëëëëëëëëëƒ

   ACKNOWLEDGE ALARM TO REGISTER:  N12:2
   BIT NUMBER:                     6
   BIT WILL BE:                    SET.

áááááááááááááááááááááááááááááááááááááááááááááááááááááááááááááááááááááááááááááááá

   SCREEN #140: ALARM                                     íëëëëëëëëëëëëëëëëëëëëë¡
                                                          °       ALARM 40       °
   SCREEN MEMORY USED:   96 BYTES                         ° POWER MONITOR HI/LO°
                                                          °       SHUTDOWN       °
                                                          ° PRESS 'Y' TO CLEAR   °
                                                          åëëëëëëëëëëëëëëëëëëëëëƒ

   ACKNOWLEDGE ALARM TO REGISTER:  N12:2
   BIT NUMBER:                     7
   BIT WILL BE:                    SET.

áááááááááááááááááááááááááááááááááááááááááááááááááááááááááááááááááááááááááááááááá

   SCREEN #141: ALARM                                     íëëëëëëëëëëëëëëëëëëëëë¡
                                                          °       ALARM 41       °
   SCREEN MEMORY USED:   63 BYTES                         °                      °
                                                          °                      °
                                                          ° PRESS 'Y' TO CLEAR   °
                                                          åëëëëëëëëëëëëëëëëëëëëëƒ

   ACKNOWLEDGE ALARM TO REGISTER:  N12:2
   BIT NUMBER:                     8
   BIT WILL BE:                    SET.

áááááááááááááááááááááááááááááááááááááááááááááááááááááááááááááááááááááááááááááááá

   SCREEN #142: ALARM                                     íëëëëëëëëëëëëëëëëëëëëë¡
                                                          °       ALARM 42       °
   SCREEN MEMORY USED:   63 BYTES                         °                      °
                                                          °                      °
                                                          ° PRESS 'Y' TO CLEAR   °
                                                          åëëëëëëëëëëëëëëëëëëëëëƒ

   ACKNOWLEDGE ALARM TO REGISTER:  N12:2
   BIT NUMBER:                     9
   BIT WILL BE:                    SET.
```

áá

```
SCREEN #143: ALARM                           íëëëëëëëëëëëëëëëëëëëëë¡
                                             °       ALARM 43        °
SCREEN MEMORY USED:    62 BYTES              °                       °
                                             °                       °
                                             ° PRESS 'Y' TO CLEAR °
                                             åëëëëëëëëëëëëëëëëëëëëëƒ

ACKNOWLEDGE ALARM TO REGISTER:   N12:2
BIT NUMBER:                      10
BIT WILL BE:                     SET.
```

áá

```
SCREEN #144: ALARM                           íëëëëëëëëëëëëëëëëëëëëë¡
                                             °       ALARM 44        °
SCREEN MEMORY USED:    63 BYTES              °                       °
                                             °                       °
                                             ° PRESS 'Y' TO CLEAR °
                                             åëëëëëëëëëëëëëëëëëëëëëƒ

ACKNOWLEDGE ALARM TO REGISTER:   N12:2
BIT NUMBER:                      11
BIT WILL BE:                     SET.
```

áá

```
SCREEN #145: ALARM                           íëëëëëëëëëëëëëëëëëëëëë¡
                                             °       ALARM 45        °
SCREEN MEMORY USED:    97 BYTES              ° BY-106 JUMPER FLUSH°
                                             °     SIGNAL LOSS       °
                                             ° PRESS 'Y' TO CLEAR °
                                             åëëëëëëëëëëëëëëëëëëëëëƒ

ACKNOWLEDGE ALARM TO REGISTER:   N12:2
BIT NUMBER:                      12
BIT WILL BE:                     SET.
```

áá

```
SCREEN #146: ALARM                           íëëëëëëëëëëëëëëëëëëëëë¡
                                             °       ALARM 46        °
SCREEN MEMORY USED:    63 BYTES              °                       °
                                             °                       °
                                             ° PRESS 'Y' TO CLEAR °
                                             åëëëëëëëëëëëëëëëëëëëëëƒ

ACKNOWLEDGE ALARM TO REGISTER:   N12:2
BIT NUMBER:                      13
BIT WILL BE:                     SET.
```

áá

```
SCREEN #147: ALARM                                    íëëëëëëëëëëëëëëëëëëëëë¡
                                                      °      ALARM 47        °
SCREEN MEMORY USED:    62 BYTES                       °                      °
                                                      °                      °
                                                      ° PRESS 'Y' TO CLEAR   °
                                                      åëëëëëëëëëëëëëëëëëëëëëƒ

ACKNOWLEDGE ALARM TO REGISTER:   N12:2
BIT NUMBER:                      14
BIT WILL BE:                     SET.
```

áá

```
SCREEN #148: ALARM                                    íëëëëëëëëëëëëëëëëëëëëë¡
                                                      °      ALARM 48        °
SCREEN MEMORY USED:    62 BYTES                       °                      °
                                                      °                      °
                                                      ° PRESS 'Y' TO CLEAR   °
                                                      åëëëëëëëëëëëëëëëëëëëëëƒ

ACKNOWLEDGE ALARM TO REGISTER:   N12:2
BIT NUMBER:                      15
BIT WILL BE:                     SET.
```

áá

```
SCREEN #149: ALARM                                    íëëëëëëëëëëëëëëëëëëëëë¡
                                                      °      ALARM 49        °
SCREEN MEMORY USED:    89 BYTES                       °   WATER CAB TEMP     °
                                                      °        LOW           °
                                                      ° PRESS 'Y' TO CLEAR   °
                                                      åëëëëëëëëëëëëëëëëëëëëëƒ

ACKNOWLEDGE ALARM TO REGISTER:   N12:3
BIT NUMBER:                      0
BIT WILL BE:                     SET.
```

áá

```
SCREEN #150: ALARM                                    íëëëëëëëëëëëëëëëëëëëëë¡
                                                      °      ALARM 50        °
SCREEN MEMORY USED:    86 BYTES                       °      WFIE TEMP       °
                                                      °        LOW           °
                                                      ° PRESS 'Y' TO CLEAR   °
                                                      åëëëëëëëëëëëëëëëëëëëëëƒ

ACKNOWLEDGE ALARM TO REGISTER:   N12:3
BIT NUMBER:                      1
BIT WILL BE:                     SET.
```

```
ááááááááááááááááááááááááááááááááááááááááááááááááááááááááááááááááááááááááááááááá

   SCREEN #151: ALARM                                     íëëëëëëëëëëëëëëëëëëëëë¡
                                                          °     ALARM 51        °
   SCREEN MEMORY USED:   62 BYTES                         °                     °
                                                          °                     °
                                                          ° PRESS 'Y' TO CLEAR  °
                                                          åëëëëëëëëëëëëëëëëëëëëëƒ

   ACKNOWLEDGE ALARM TO REGISTER:  N12:3
   BIT NUMBER:                     2
   BIT WILL BE:                    SET.

ááááááááááááááááááááááááááááááááááááááááááááááááááááááááááááááááááááááááááááááá

   SCREEN #152: ALARM                                     íëëëëëëëëëëëëëëëëëëëëë¡
                                                          °     ALARM 52        °
   SCREEN MEMORY USED:   63 BYTES                         °                     °
                                                          °                     °
                                                          ° PRESS 'Y' TO CLEAR  °
                                                          åëëëëëëëëëëëëëëëëëëëëëƒ

   ACKNOWLEDGE ALARM TO REGISTER:  N12:3
   BIT NUMBER:                     3
   BIT WILL BE:                    SET.

ááááááááááááááááááááááááááááááááááááááááááááááááááááááááááááááááááááááááááááááá

   SCREEN #153: ALARM                                     íëëëëëëëëëëëëëëëëëëëëë¡
                                                          °     ALARM 53        °
   SCREEN MEMORY USED:   63 BYTES                         °                     °
                                                          °                     °
                                                          ° PRESS 'Y' TO CLEAR  °
                                                          åëëëëëëëëëëëëëëëëëëëëëƒ

   ACKNOWLEDGE ALARM TO REGISTER:  N12:3
   BIT NUMBER:                     4
   BIT WILL BE:                    SET.

ááááááááááááááááááááááááááááááááááááááááááááááááááááááááááááááááááááááááááááááá

   SCREEN #154: ALARM                                     íëëëëëëëëëëëëëëëëëëëëë¡
                                                          °     ALARM 54        °
   SCREEN MEMORY USED:   93 BYTES                         ° BY-106 HIGH FLUSH   °
                                                          °     PRESSURE        °
                                                          ° PRESS 'Y' TO CLEAR  °
                                                          åëëëëëëëëëëëëëëëëëëëëëƒ

   ACKNOWLEDGE ALARM TO REGISTER:  N12:3
   BIT NUMBER:                     5
   BIT WILL BE:                    SET.
```

```
SCREEN #155: ALARM                                  íëëëëëëëëëëëëëëëëëëëëëë¡
                                                    º      ALARM 55       º
SCREEN MEMORY USED:   63 BYTES                      º                     º
                                                    º                     º
                                                    º PRESS 'Y' TO CLEAR  º
                                                    åëëëëëëëëëëëëëëëëëëëëëƒ

ACKNOWLEDGE ALARM TO REGISTER:  N12:3
BIT NUMBER:                     6
BIT WILL BE:                    SET.
```

```
SCREEN #156: ALARM                                  íëëëëëëëëëëëëëëëëëëëëëë¡
                                                    º      ALARM 56       º
SCREEN MEMORY USED:   63 BYTES                      º                     º
                                                    º                     º
                                                    º PRESS 'Y' TO CLEAR  º
                                                    åëëëëëëëëëëëëëëëëëëëëëƒ

ACKNOWLEDGE ALARM TO REGISTER:  N12:3
BIT NUMBER:                     7
BIT WILL BE:                    SET.
```

```
SCREEN #157: ALARM                                  íëëëëëëëëëëëëëëëëëëëëëë¡
                                                    º      ALARM 57       º
SCREEN MEMORY USED:   96 BYTES                      º  BY-106 SHUTDOWN    º
                                                    º  TIMER ACTIVATED    º
                                                    º PRESS 'Y' TO CLEAR  º
                                                    åëëëëëëëëëëëëëëëëëëëëëƒ

ACKNOWLEDGE ALARM TO REGISTER:  N12:3
BIT NUMBER:                     8
BIT WILL BE:                    SET.
```

```
SCREEN #158: ALARM                                  íëëëëëëëëëëëëëëëëëëëëëë¡
                                                    º      ALARM 58       º
SCREEN MEMORY USED:   91 BYTES                      º PUMP WORN BEARING   º
                                                    º      ALERT          º
                                                    º PRESS 'Y' TO CLEAR  º
                                                    åëëëëëëëëëëëëëëëëëëëëëƒ

ACKNOWLEDGE ALARM TO REGISTER:  N12:3
BIT NUMBER:                     9
BIT WILL BE:                    SET.
```

SCREEN #159: ALARM

SCREEN MEMORY USED: 94 BYTES

```
ALARM 59
MOTOR WINDING HI
TEMP WARNING
PRESS 'Y' TO CLEAR
```

ACKNOWLEDGE ALARM TO REGISTER: N12:3
BIT NUMBER: 10
BIT WILL BE: SET.

SCREEN #200: ALARM

SCREEN MEMORY USED: 30 BYTES

```
PRESS 'Y' TO CLEAR
```

ALARM ACKNOWLEDGE WILL NOT BE SENT

APPENDIX D DTAM SCREEN FLOW DIAGRAM
FOR PIC SKID "X" AT BY-105

RPP-7009 REV. 0
Date 6/06/01

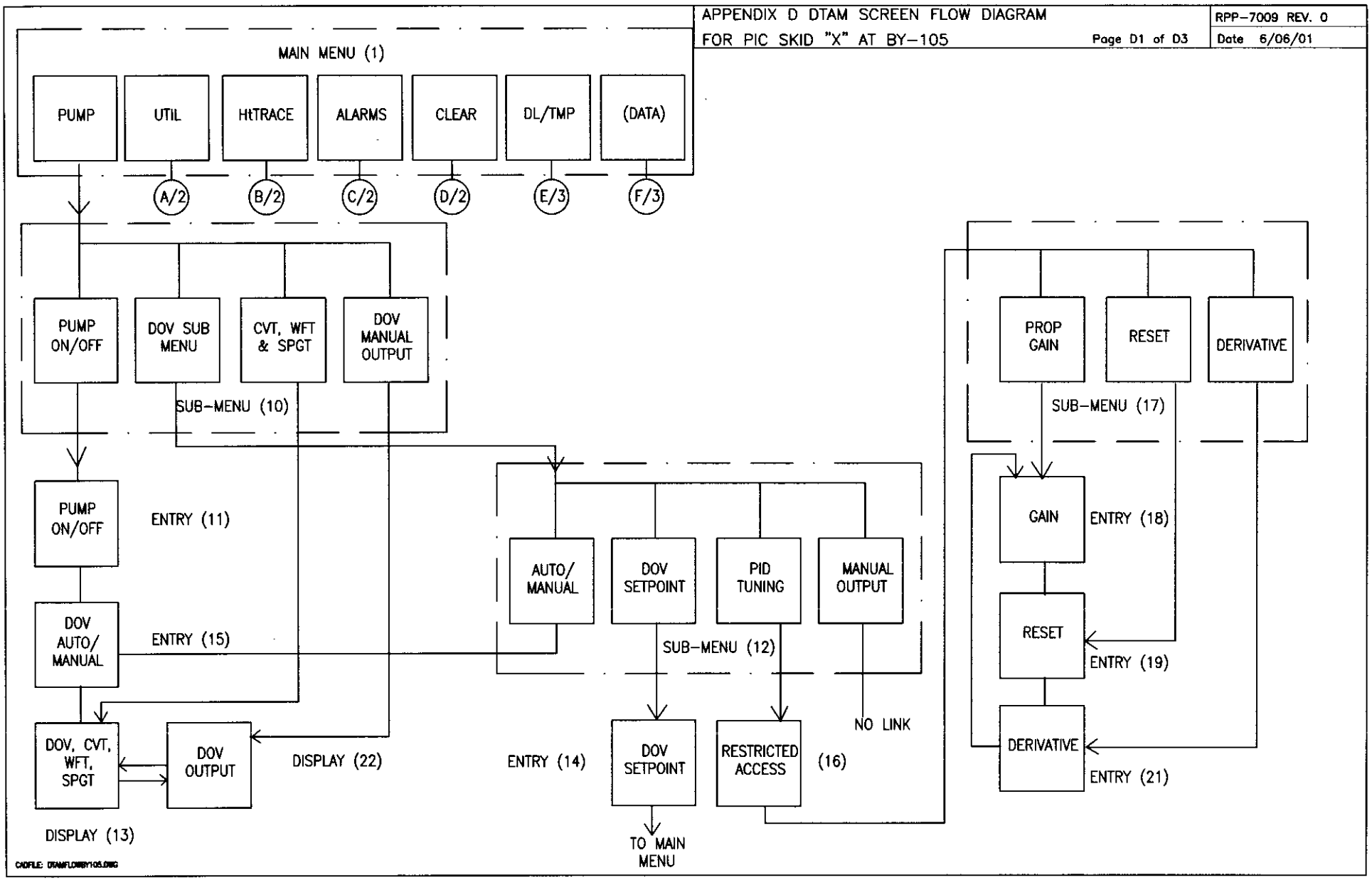

APPENDIX D DTAM SCREEN FLOW DIAGRAM
FOR PIC SKID "X" AT BY-105

RPP-7009 REV. 0
Date 6/06/01

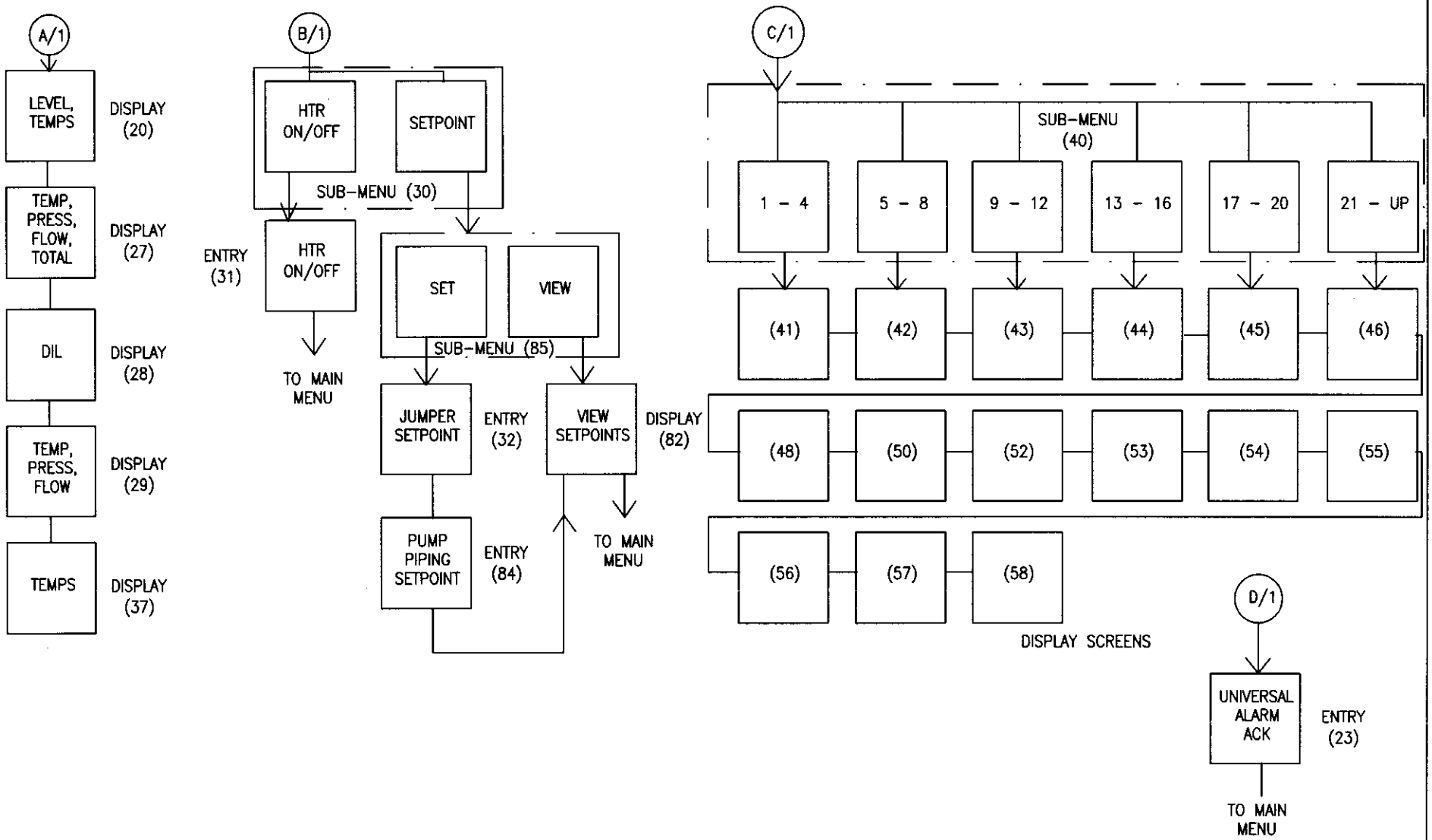

CADFILE: DTAMFLOW28BY105.DWG

APPENDIX D DTAM SCREEN FLOW DIAGRAM
FOR PIC SKID "X" AT BY-105

RPP-7009 REV. 0
Date 6/06/01

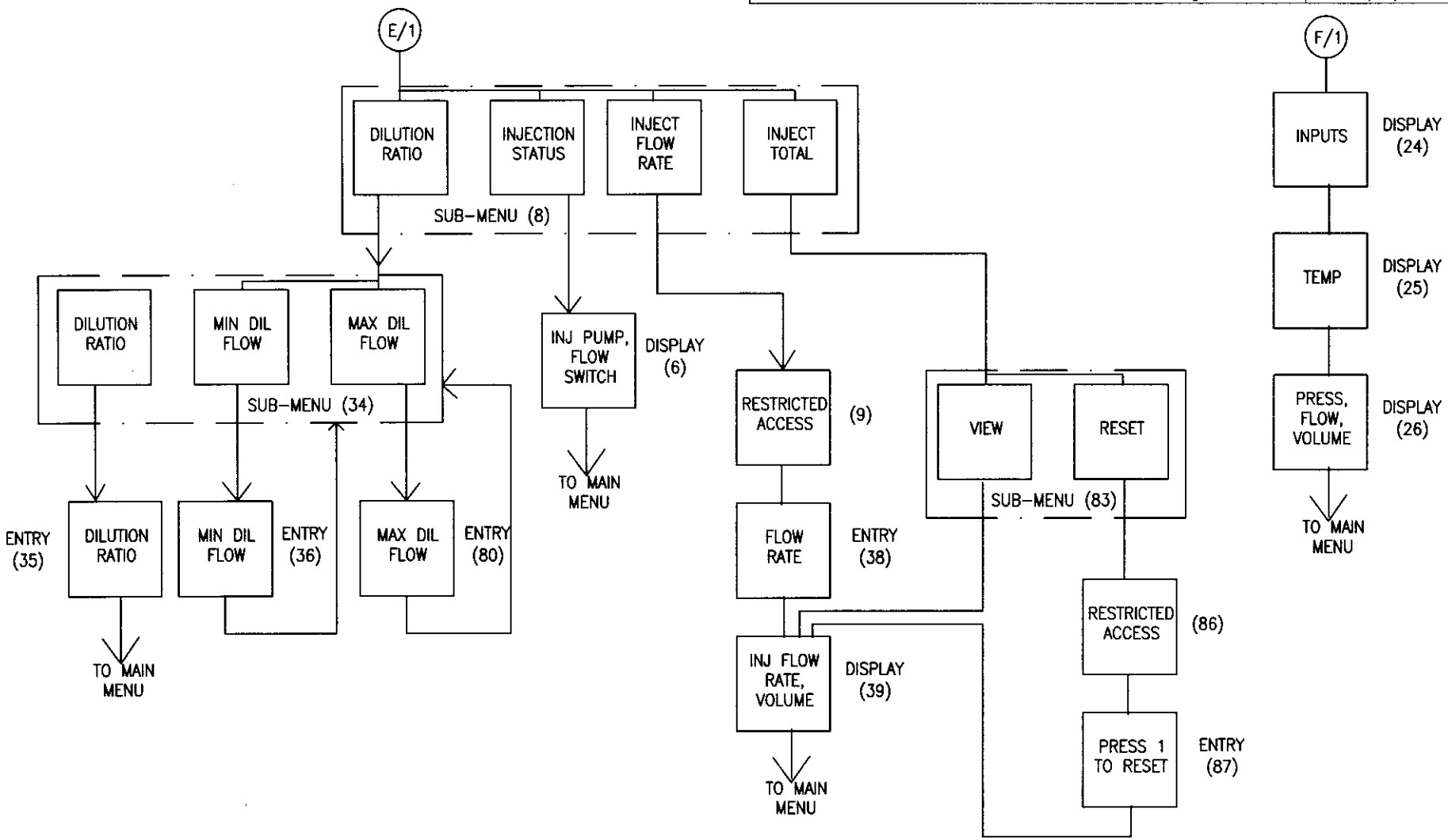

CADFILE: DTAMFLOW3BY105.DWG