MAR 28 2001
Sta 22 43

ENGINEERING DATA TRANSMITTAL

S

1. EDT 627050

To: (Receiving Organization) Distribution DCP 3/20/01 ~~FFTF Technical Reference Center~~	3. From: (Originating Organization) FFTF Mech. Systems Engineering	4. Related EDT No.:
5. Proj./Prog./Dept./Div.: FFTF, Mech. Systems Engineering	6. Design Authority/Design Agent/Cog. Engr.: RM Nielsen	7. Purchase Order No.:
8. Originator Remarks: Key Words: R5, R6, Air Compressor, Atlas Copco. Pages 2, 45, 48, 63, 66, 98, 100, 143, 152 Intentionally Left Blank		9. Equip./Component No.: Air Compressors/R5,R6
		10. System/Bldg./Facility: 23J/4717/FFTF
		12. Major Assm. Dwg. No.: H-4-11074
11. Receiver Remarks:	11A. Design Baseline Document? ☒ Yes ☐ No	13. Permit/Permit Application No.:
		14. Required Response Date:

15. DATA TRANSMITTED

(A) Item No.	(B) Document/Drawing No.	(C) Sheet No.	(D) Rev. No.	(E) Title or Description of Data Transmitted	(F) Approval Designator	(G) Reason for Transmittal	(H) Originator Disposition	(I) Receiver Disposition
1	HNF-7701		0	OMM for Air Comp. R5 & R6	SQ	1	1	

16. KEY

Approval Designator (F)	Reason for Transmittal (G)	Disposition (H) & (I)
E, S, Q, D OR N/A (See WHC-CM-3-5, Sec. 12.7)	1. Approval 2. Release 3. Information 4. Review 5. Post-Review 6. Dist. (Receipt Acknow. Required)	1. Approved 2. Approved w/comment 3. Disapproved w/comment 4. Reviewed no/comment 5. Reviewed w/comment 6. Receipt acknowledged

17. SIGNATURE/DISTRIBUTION (See Approval Designator for required signatures)

(G) Reason	(H) Disp.	(J) Name	(K) Signature	(L) Date	(M) MSIN	(G) Reason	(H) Disp.	(J) Name	(K) Signature	(L) Date	(M) MSIN
1	1	Design Authority RM Nielsen	Ralph M Nielsen			4	4	D. A. Gantt	D. A. Gantt	3-26-01	
		Design Agent									
	1	Cog. Eng. RM Nielsen	Ralph M Nielsen								
1	1	Cog. Mgr. WF Brehm	W F Brehm	3-23-01							
1	1	QA JE Duda	J E Duda	3/23/01							
1	1	Safety DG Quilici	D G Quilici	3/23/01							
		Env.									

Signature of EDT Originator: D B Sh — Date: 3/22/01	19. Authorized Representative for Receiving Organization — Date	20. Design Authority/Cognizant Manager: W F Brehm — Date: 3-23-01	21. DOE APPROVAL (if required) Ctrl No. ☐ Approved ☐ Approved w/comments ☐ Disapproved w/comments

APPENDIX B

UNREVIEWED SAFETY QUESTION SCREENING FORM

REFERENCE ITEM: EDT-626024

TITLE: Enter OMM-HNF-7701, "Operation and Maintenance Manual for Air Compressors R5 & R6" into the Hanford Document Control System.

NOTE: This form is not to be used for PHYSICAL PLANT MODIFICATIONS.

QUESTIONS: *(Answer only one of the following three questions)*

Does the referenced item:

A. Make PROPOSED CHANGES to the facility or procedures which differ from conditions described in the AUTHORIZATION BASIS?

No _X_ Yes/Maybe

Basis: The creation of this document will not alter procedures associated with the instrument air system or modify the instrument air system itself. When the new units, R5 and R6 are installed in the plant and connected to the instrument air system, any safety questions or issues will be addressed in the USQ evaluation included in the Engineering Change Notice (ECN) that documents the modification. Furthermore, any procedures that will reference the new OMM will contain their own USQ as part of their Field Change Notice, (FCN) if required.
FSAR Section(s) Reviewed: Chapter 9, Auxiliary Systems, Sec. 9.6, Service Piping

B. Describe an ISSUE which differs from those described events or conditions in the AUTHORIZATION BASIS? No ___ Yes/Maybe

Basis:
FSAR Section(s) Reviewed:

C. Describe tests or experiments which differ from those described in the AUTHORIZATION BASIS? No ___ Yes/Maybe

Basis:
FSAR Section(s) Reviewed:

QUSQE #1 Ralph M Nielsen
(print name)
R M Nielsen 3-22-01 Date
Signature

QUSQE #2 W F BREHM
(print name)
W F Brehm 3-22-01 Date
Signature

DISTRIBUTION SHEET

Distribution	From Mechanical Systems Eng. FFTF	Page 1 of 1
Project Title/Work Order Operation and Maintenance Manual for Air Compressors R5 & R6		Date 5/1/01 EDT No. 627050 ECN No.

Name	MSIN	Text With All Attach.	Text Only	Attach./ Appendix Only	EDT/ECN Only
RM Nielsen	N2-56	X			
JJ Flaherty	N2-05	X			
GT Taylor	N2-05	X			
FFTF Tech. Library	N2-12	X			
DOE/RL Reading Room	H2-53	X			

A-6000-135 (10/97)

Operation and Maintenance Manual for Air Compressors R5 & R6

Prepared for the U.S. Department of Energy
Assistant Secretary for Environmental Management

Project Hanford Management Contractor for the
U.S. Department of Energy under Contract DE-AC06-96RL13200

Fluor Hanford
P.O. Box 1000
Richland, Washington

Approved for public release; further dissemination unlimited

Date Received for Clearance Process (MM/YY/DD)

INFORMATION CLEARANCE FORM

A. Information Category

- [ ] Abstract
- [ ] Summary
- [ ] *Visual Aid*
- [ ] Full Paper
- [ ] Journal Article
- [ ] Internet
- [ ] *Software*
- [ ] Report
- [x] Other OMM

B. Document Number HNF-7701

C. Title
Operation and Maintenance Manual for Air Compressors R5 & R6

D. Internet Address

E. Required Information

1. Is document potentially Classified? [x] No [ ] Yes (MANDATORY)

   W F Brehm 3-23-01
   Manager's Signature Required

   If Yes _____ [ ] No [ ] Yes Classified
   ADC Signature Required

2. References in the Information are Applied Technology [x] No [ ] Yes

   Export Controlled Information [x] No [ ] Yes

3. Does Information Contain the Following: (MANDATORY)
   a. New or Novel (Patentable) Subject Matter? [x] No [ ] Yes
      If "Yes", Disclosure No.: _____
   b. Information Received in Confidence, Such as Proprietary and/or Inventions?
      [x] No [ ] Yes If "Yes", Affix Appropriate Legends/Notices.
   c. Copyrights? [ ] No [x] Yes If "Yes", Attach Permission.
   d. Trademarks? [ ] No [x] Yes If "Yes", Identify in Document.
4. Is Information requiring submission to OSTI? [x] No [ ] Yes
5. Release Level? [x] Public [ ] Limited

F. Complete for a Journal Article

1. Title of Journal

G. Complete for a Presentation

1. Title for Conference or Meeting _____
2. Group Sponsoring _____
3. Date of Conference _____
4. City/State _____
5. Will Information be Published in Proceedings? [ ] No [ ] Yes
6. Will Material be Handed Out? [ ] No [ ] Yes

H. Author/Requestor

X DG Wandler 3/23/01
(Print and Sign)

Responsible Manager

WF Brehm W F Brehm 3-23-01
(Print and Sign)

I. Reviewers

	Yes	Print	Signature	Public Y/N (If N, complete J)
General Counsel	[ ]			Y / N
Office of External Affairs	[ ]			Y / N
DOE-RL	[ ]			Y / N
Other	[x]	DA GANTT, Applied Technology	D A Gantt 3/26/01	(Y) / N
Other	[ ]			Y / N

J. If Information Includes Sensitive Information and is not to be released to the Public indicate category below.

- [ ] Applied Technology
- [ ] Personal/Private
- [ ] Proprietary
- [ ] Business-Sensitive
- [ ] Predecisional
- [ ] UCNI
- [ ] Protected CRADA
- [ ] Export Controlled
- [ ] Procurement-Sensitive
- [ ] Patentable
- [ ] Other (Specify) _____

Information Clearance Approval

APPROVED FOR RELEASE
OFFICIAL DOCUMENT
Date 3/26/01

K. If Additional Comments, Please Attach Separate Sheet

A-6001-401 (12/00)

HNF-7701
Revision 0

EDT 627050

Operation and Maintenance Manual for Air Compressors R5 & R6

Document Type: OMM Division: FFTF

DG Wandler
Fluor Hanford

Date Published
May 2001

Prepared for the U.S. Department of Energy
Assistant Secretary for Environmental Management

Project Hanford Management Contractor for the
U.S. Department of Energy under Contract DE-AC06-96RL13200

Fluor Hanford
P.O. Box 1000
Richland, Washington

G.C. Perkins
G.C. Perkins (Jackie) MAR 26 2001
Release Approval Date

MAR 26 2001
DATE:
HANFORD RELEASE
STA: 22
ID: 43
Release Stamp

Approved for public release; further dissemination unlimited

LEGAL DISCLAIMER

This report was prepared as an account of work sponsored by an agency of the United States Government. Neither the United States Government nor any agency thereof, nor any of their employees, nor any of their contractors, subcontractors or their employees, makes any warranty, express or implied, or assumes any legal liability or responsibility for the accuracy, completeness, or any third party's use or the results of such use of any information, apparatus, product, or process disclosed, or represents that its use would not infringe privately owned rights. Reference herein to any specific commercial product, process, or service by trade name, trademark, manufacturer, or otherwise, does not necessarily constitute or imply its endorsement, recommendation, or favoring by the United States Government or any agency thereof or its contractors or subcontractors. The views and opinions of authors expressed herein do not necessarily state or reflect those of the United States Government or any agency thereof.

This report has been reproduced from the best available copy.

Printed in the United States of America

Total Pages: 160

Key Words: R5, R6, Air Compressor, Atlas Copco

~~BAT 00050~~ RMM. 3-26-01
p. 2
REV. 0

APPLICATION FOR PERMISSION TO USE YOUR COPYRIGHTED MATERIAL

To: Atlas Copco
161 Lower Westfield Road
Holyoke, MA 01040

Date: 02/06/01

Permission is requested to reproduce the following copyrighted material from:
Atlas Copco, Stationary Air Compressors, GA55-GA75-GA55W-GA75W-GA90C.
Instruction Book.
Document Number 2920 1381 01

Selections from text (specify by date of issue, page, paragraph, or illustration; if desired, attach a copy of the material in question):
All.

Title of work or project in which this material will be included:
HNF-7701, Operations and Maintenance Manual for Air Compressors R5 and R6.

Estimated publication date: 05/01/01 Author: DG Wandler

Publisher (if applicable): N/A

If the copyrighted material is not to be used in a published work, please provide a brief description of how it is to be used:
N/A

A self-addressed stamped envelope is enclosed for your reply.

Name: DG Wandler MSIN: N2-01 Date: 02/06/01

Signature: D.G. Wandler

Credit line (if required):

Application approved by:

Name: Paul Carlson Date: 3-12-01

Company Name: Atlas Copco Comp. Inc Signatory's Position: Tech. Mgr

Signature: Paul Carlson (on behalf of)

A-6000-237 (10/97)

REV. 0

APPLICATION FOR PERMISSION TO USE YOUR COPYRIGHTED MATERIAL

To: Atlas Copco
161 Lower Westfield Road
Holyoke, MA 01040

Date: 02/06/01

Permission is requested to reproduce the following copyrighted material from:

Atlas Copco, Oil-water Separators. OSD22 for GA11 up to GA22, OSD90 for GA30 up to GA90 VSD. Installation and Operating Intructions, Parts List.
Document Number 2920 1204 01

Selections from text (specify by date of issue, page, paragraph, or illustration; if desired, attach a copy of the material in question):

All.

Title of work or project in which this material will be included:

HNF-7701, Operations and Maintenance Manual for Air Compressors R5 and R6.

Estimated publication date: 05/01/01 Author: DG Wandler

Publisher (if applicable): N/A

If the copyrighted material is not to be used in a published work, please provide a brief description of how it is to be used:

N/A

A self-addressed stamped envelope is enclosed for your reply.

Name: DG Wandler MSIN: N2-01 Date: 02/06/01

Signature: [signature]

Credit line (if required):

Application approved by:

Name: Paul Carlson Date: 3-12-01

Company Name: Atlas Copco Compressors Signatory's Position: Technical Mgr

Signature [signature] (on behalf of)

A-6000-237 (10/97)

p iii RHN-3-21

REV. 0

APPLICATION FOR PERMISSION TO USE YOUR COPYRIGHTED MATERIAL

To: Atlas Copco
161 Lower Westfield Road
Holyoke, MA 01040

Date: 02/06/01

Permission is requested to reproduce the following copyrighted material from:

Atlas Copco, Stationary Air Compressors, GA5 up to GA90C.
User Manual for Elektronikon Regualator.
Document Number 2920 1207 06

Selections from text (specify by date of issue, page, paragraph, or illustration; if desired, attach a copy of the material in question):

All.

Title of work or project in which this material will be included:

HNF-7701, Operations and Maintenance Manual for Air Compressors R5 and R6.

Estimated publication date: 05/01/01 Author: DG Wandler

Publisher (if applicable): N/A

If the copyrighted material is not to be used in a published work, please provide a brief description of how it is to be used:

N/A

A self-addressed stamped envelope is enclosed for your reply.

Name: DG Wandler MSIN: N2-01 Date: 02/06/01

Signature:

Credit line (if required):

Application approved by:

Name: Paul Callow Date: 3-12-01

Company Name: Atlas Copco Comp. Signatory's Position: Tech. Mgr.

Signature: (on behalf of)

A-6000-237 (10/97)

P IV RKM-3-2601
REV 0

APPLICATION FOR PERMISSION TO USE YOUR COPYRIGHTED MATERIAL

To: Atlas Copco
161 Lower Westfield Road
Holyoke, MA 01040

Date: 02/06/01

Permission is requested to reproduce the following copyrighted material from:
Atlas Copco, Stationary Air Compressors, GA55,-75 Pack, GA55W,-75W Pack, GA55,-75 Full-feature, GA55W,-75W Full Feature. Parts List.
Document Number 2930 1268 01

Selections from text (specify by date of issue, page, paragraph, or illustration; if desired, attach a copy of the material in question):
All.

Title of work or project in which this material will be included:
HNF-7701, Operations and Maintenance Manual for Air Compressors R5 and R6.

Estimated publication date: 05/01/01 Author: DG Wandler

Publisher (if applicable): N/A

If the copyrighted material is not to be used in a published work, please provide a brief description of how it is to be used:
N/A

A self-addressed stamped envelope is enclosed for your reply.

Name: DG Wandler MSIN: N2-01 Date: 02/06/01

Signature: [signature]

Credit line (if required):

Application approved by:

Name: Paul Callow Date: 3-12-01

Company Name: ATLAS COPCO COMP INC Signatory's Position: TECH. MGR.

Signature: [signature] (on behalf of)

A-6000-237 (10/97)

HNT-7701
P1
REV 0

Atlas Copco Stationary Air Compressors

GA55 - GA75 - GA55 W - GA75 W - GA90C

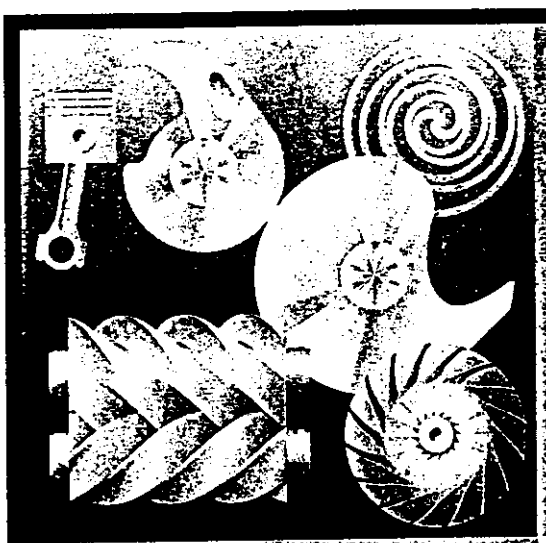

Atlas Copco

HNF 7701
P2
REV0

Intentionally Blank

OWNERSHIP DATA

Unit type: .....
Motor type: .....
Delivery date: .....
Service Plan: .....

Owner's machine No.: .....
Unit serial No.: .....
Motor serial No.: .....
First start-up date: .....

Selected lubricants
Compressor: .....
Bearing grease type, electric motor: .....

Capacity: .....

Printed Matter Nos.
Atlas Copco instruction book: .....
Atlas Copco parts list: .....
Atlas Copco logbook: .....

Motor instruction book: .....
Motor parts list: .....

Local Atlas Copco Representative
Name: .....
Address: .....
Telephone: ..... Contact persons: Service: .....
Telex: ..... Parts: .....

SAFETY PRECAUTIONS

To be read attentively and acted accordingly before installing, operating or repairing the unit.

These recommendations apply to machinery processing or consuming air or inert gas. Processing of any other gas requires additional safety precautions typical to the application which are not included herein.

ddition to normal safety rules which should be observed with stationary compressors and equipment, the following safety directions and precautions are of special importance.

When operating this unit, the operator must employ safe working practices and observe all related local work safety requirements and ordinances.

The owner is responsible for maintaining the unit in a safe operating condition. *Parts and accessories shall be replaced if unsuitable for safe* operation.

Installation, operation, maintenance and repair shall only be performed by authorized, trained, competent personnel.

Normal ratings (pressures, temperatures, time settings, etc.) shall be durably marked.

Any modification on the compressor shall only be performed in agreement with Atlas Copco and under supervision of authorized, competent personnel.

If any statement in this book, especially with regard to safety, does not comply with local legislation, the stricter of the two shall apply.

These precautions are general and cover several machine types and equipment; hence some statements may not apply to the unit(s) described in this book.

Installation

Apart from general engineering practice in conformity with the local safety regulations, the following directives are specially stressed:

A compressor shall be lifted only with adequate equipment in *conformity with local safety rules.*

Loose or pivoting parts shall be securely fastened before lifting. It is strictly forbidden to dwell or stay in the risk zone under a lifted load. Lifting acceleration and retardation shall be kept within safe limits.

Wear a safety helmet when working in the area of overhead or lifting equipment.

2. Any blanking flanges, plugs, caps and desiccant bags shall be connections shall be of correct size and suitable for the working pressure.

3. Place the unit where the ambient air is as cool and clean as possible. If necessary, install a suction duct. Never obstruct the air inlet. Care shall be taken to minimize the entry of moisture with the inlet air.

4. The aspirated air shall be free from flammable fumes or vapours, *e.g. paint solvents, that can lead to internal fire or explosion.*

5. Air-cooled units shall be installed in such a way that an adequate flow of cooling air is available and that the exhausted air does not recirculate to the inlet.

6. Arrange the air intake so that loose clothing of people cannot be sucked in.

7. *Ensure that the discharge pipe from* the compressor to the aftercooler or air net is free to expand under heat and that it is not in contact with or close to flammable material.

8. No external force may be exerted on the air outlet valve; the connected pipe must be free of strain.

9. If remote control is installed, the unit shall bear an obvious sign reading:

   DANGER: This machine is remotely controlled and may start without warning.

   As a further safeguard, persons switching on remotely controlled units shall take adequate precautions to ensure that there is no one checking or working on the machine. To this end, a suitable notice shall be affixed to the start equipment.

10. On units with automatic start-stop *system, a sign stating* **"This machine may start without warning"** shall be attached near the instrument panel.

11. *In multiple compressor systems* manual valves shall be installed to isolate each compressor. Non-return valves (check valves) shall not be relied upon for isolating pressure systems.

12. Never remove or tamper with the safety devices, guards or insulations

HNF 7701
P4
REVO

Atlas Copco Stationary Air Compressors

GA55 - GA75 - GA55 W - GA75 W - GA90C

Instruction Book

Important

1. This book applies exclusively to compressors from serial number AII-465 000 onwards.
2. This book must be used together with the "User manual for Elektronikon regulator for GA5 up to GA90C".

- Copyright 1999, Atlas Copco Airpower n.v., Antwerp, Belgium.
  Any unauthorized use or copying of the contents or any part thereof is prohibited. This applies in particular to trademarks, model denominations, part numbers and drawings.

- This instruction book meets the requirements for instructions specified by the machinery directive 89/392/EEC and is valid for CE as well as non-CE labelled machines.

No. 2920 1381 01

Registration code: APC G55-90C/'96 / 38 / 992
Replaces No. 2920 1381 00

1999-04

Web-site: http://www.atlascopco-compressors.com

2920138101

Atlas Copco

PS REVO

This instruction book describes how to handle the machines to ensure safe operation, optimum efficiency and long service life.

Read this book before putting the machine into operation to ensure correct handling, operation and proper maintenance from the beginning. The maintenance schedule comprises measures for keeping the machine in good condition.

ep the book available for the operator and make sure that the machine is operated and that maintenance is carried out according to the instructions. Record all operating data, maintenance performed, etc. in an operator's logbook available from Atlas Copco. Follow all relevant safety precautions, including those mentioned on the cover of this book.

Repairs must be carried out by trained personnel from Atlas Copco who can be contacted for any further information.

In all correspondence always mention the type and the serial number, shown on the data plate.

For all data not mentioned in the text, see sections "Preventive maintenance schedule" and "Principal data".

The company reserves the right to make changes without prior notice.

Contents

	Page
1 Leading particulars	3
1.1 General description	3
1.1.1 Air flow	4
1.1.2 Oil system	5
1.1.3 Cooling and condensate drain systems	7
1.2 Unloading/loading system	7
1.2.1 Unloading	7
1.2.2 Loading	7
1.3 Elektronikon regulator	7
1.3.1 Regulator	7
1.3.2 Control panel	11
1.3.3 Function keys	12
1.3.4 Menu-driven control programs	13
1.4 Air dryer on GA Full-feature	14
1.4.1 Compressed air circuit	14
1.4.2 Refrigerant circuit	14
2 Installation	15
2.1 Dimension drawings	15
2.2 Installation proposal	16
2.3 Electric cable size	18
2.3.1 For GA55/GA55 W	18
2.3.2 For GA75/GA75 W	18
2.3.3 For GA90C	18
2.4 Electrical connections	19
2.5 Pictographs	19
2.6 Cooling water requirements	20
3 Operating instructions	20
3.1 Initial start-up	20
3.1.1 Safety	20
3.1.2 User Manual	20
3.1.3 Outdoor/altitude operation	20
3.1.4 Moving/lifting	21
3.1.5 External compressor status indication	21
3.1.6 Compressor control modes	21
3.2 Before starting	22
3.3 Starting	23
3.4 During operation	23
3.4.1 Checking the display	24
3.5 Manual control	25
3.6 Stopping	25
3.7 Taking out of operation at end of compressor service life	25
4 Maintenance	26
4.1 Drive motor	26
4.2 Preventive maintenance schedule for the compressor	26
4.3 Oil specifications	28
4.3.1 Atlas Copco Roto-injectfluid	28
4.3.2 Mineral oil	28
4.4 Oil and oil filter change	28
4.5 Storage after installation	28
4.6 Service kits	28
5 Adjustments and servicing procedures	30
5.1 Air filter	30
5.2 Coolers	30
5.3 Safety valve	30
6 Problem solving	30
7 Principal data	31
7.1 Readings on display	31
7.2 Settings of safety valve	31
7.3 Maximum settings of overload relay, circuit breaker and fuses	32
7.3.1 For GA55/GA55 W	32
7.3.2 For GA75/GA75 W	32
7.3.3 For GA90C	32
7.4 Settings of dryer switches	33
7.5 Compressor specifications	33
7.5.1 Reference conditions	33
7.5.2 Limitations	33
7.5.3 GA55/GA55 W Pack	34
7.5.4 GA55/GA55 W Full-feature	34
7.5.5 GA75/GA75 W Pack	35
7.5.6 GA75/GA75 W Full-feature	35
7.5.7 GA90C Pack	36
7.5.8 GA90C Full-feature	36
7.6 Conversion list of SI units into US/British units	36

HNF 7701
P 6
REV 0

1 Leading particulars

1.1 General description

GA are stationary, single-stage, oil-injected screw compressors driven by an electric motor. GA55, GA75 and GA90C are air-cooled, whereas GA55 W and GA75 W are water-cooled.

GA Pack
GA Pack are enclosed in a sound-insulated bodywork. The compressors are controlled by the Atlas Copco Elektronikon® regulator. This electronic control module is fitted to the door of the front panel. The Elektronikon regulator reduces the power consumption and it allows the operator to easily program and monitor the compressor. The control panel includes the start, stop and emergency stop buttons. An electric cabinet comprising the motor starter is located behind this panel. The compressors are provided with an automatic condensate drain system.

GA Full-feature
GA Full-feature are GA Pack compressors, additionally provided with an air dryer (1-Fig. 1.4) integrated in the bodywork. The dryer removes moisture from the compressed air by cooling the air to near freezing point and automatically draining the condensate. See section 1.4.

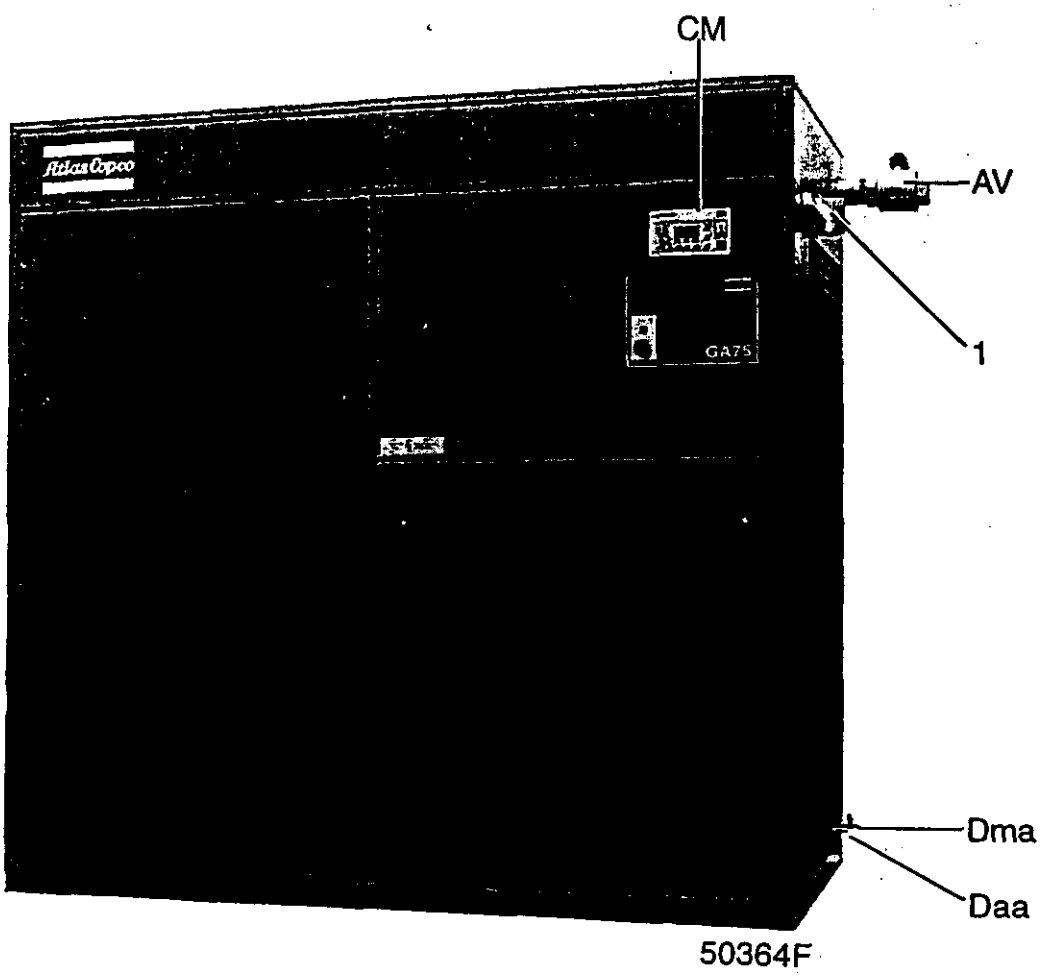

Fig. 1.1 General view of GA75

HAIF 7701
P7
REV 0

1.1.1 Air flow (Fig. 1.6)

Air drawn through filter (AF) and open inlet valve (IV) into compressor element (E) is compressed. Compressed air and oil flow into air receiver/oil separator (AR) via check valve (CV). The air is discharged through outlet valve (AV) via minimum pressure valve (Vp), air cooler (Ca) and condensate trap (MTa).

Check valve (CV) prevents blow-back of compressed air when the compressor is stopped. Minimum pressure valve (Vp) prevents the receiver pressure from dropping below a minimum pressure.

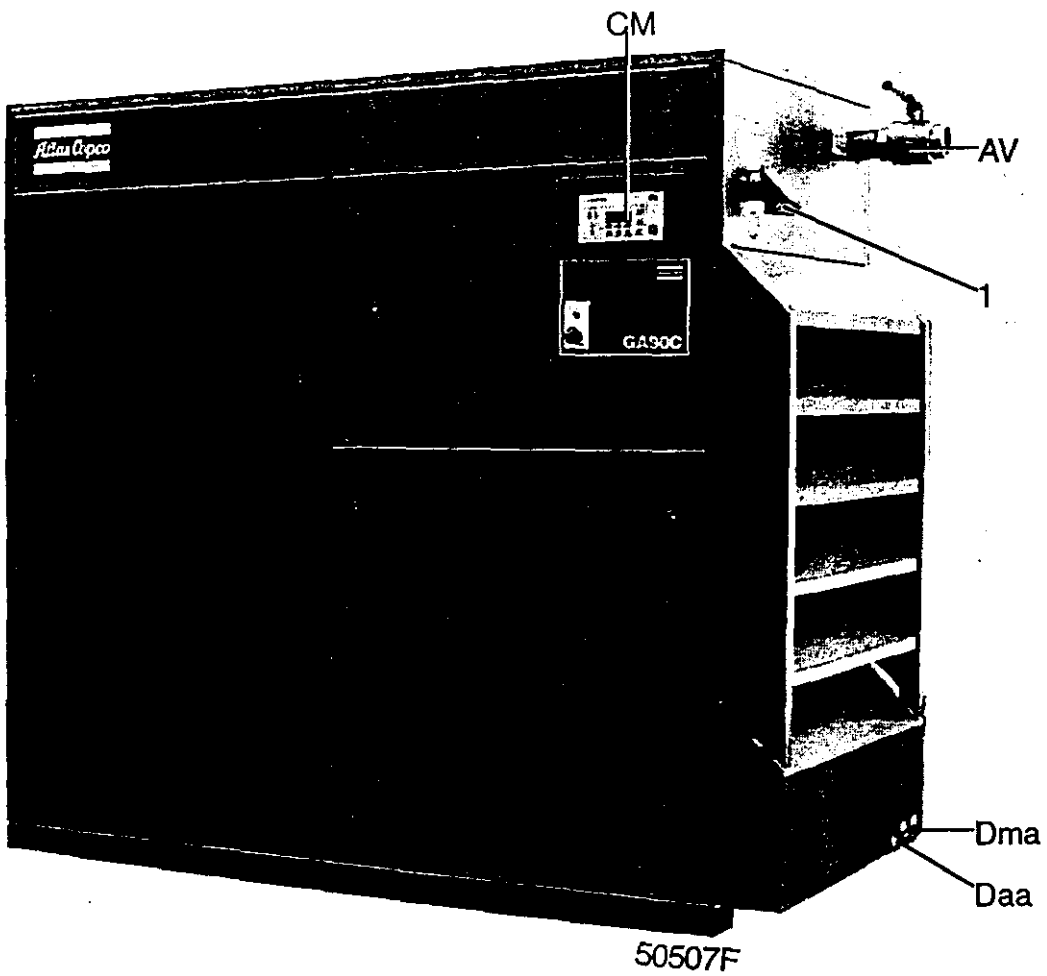

Fig. 1.2 General view of GA90C

AV	Air outlet valve
CM	Control module
Daa	Automatic condensate drain outlet
Dma	Manual condensate drain valve
1	Electric cable entry

Figs. 1.1 and 1.2 General views of GA75 and GA90C

HMF 7701
P 8
REV0

1.1.2 Oil system (Fig. 1.6)

In air receiver/oil separator (AR), most of the oil is removed from the air/oil mixture centrifugally. The balance is removed by oil separator element (OS). The oil collects in the lower part of air receiver/oil separator (AR), which serves as oil tank.

The oil system is provided with a by-pass valve (BV). When the oil temperature is below 40 degrees celsius 1), by-pass valve (BV) shuts off the oil supply from oil cooler (Co). Air pressure forces the oil from air receiver/oil separator (AR) through oil filters (OF) and oil stop valve (Vs) to compressor element (E) and its lubrication points. Oil cooler (Co) is by-passed.

By-pass valve (BV) starts opening the oil supply from cooler (Co) when the oil temperature has increased to the above-mentioned value. At approx. 55 degrees celsius 1) all the c flows through the oil cooler.

Oil stop valve (Vs) prevents the compressor element from flooding with oil when the compressor is stopped. The valve is opened by element outlet pressure when the compressor is started.

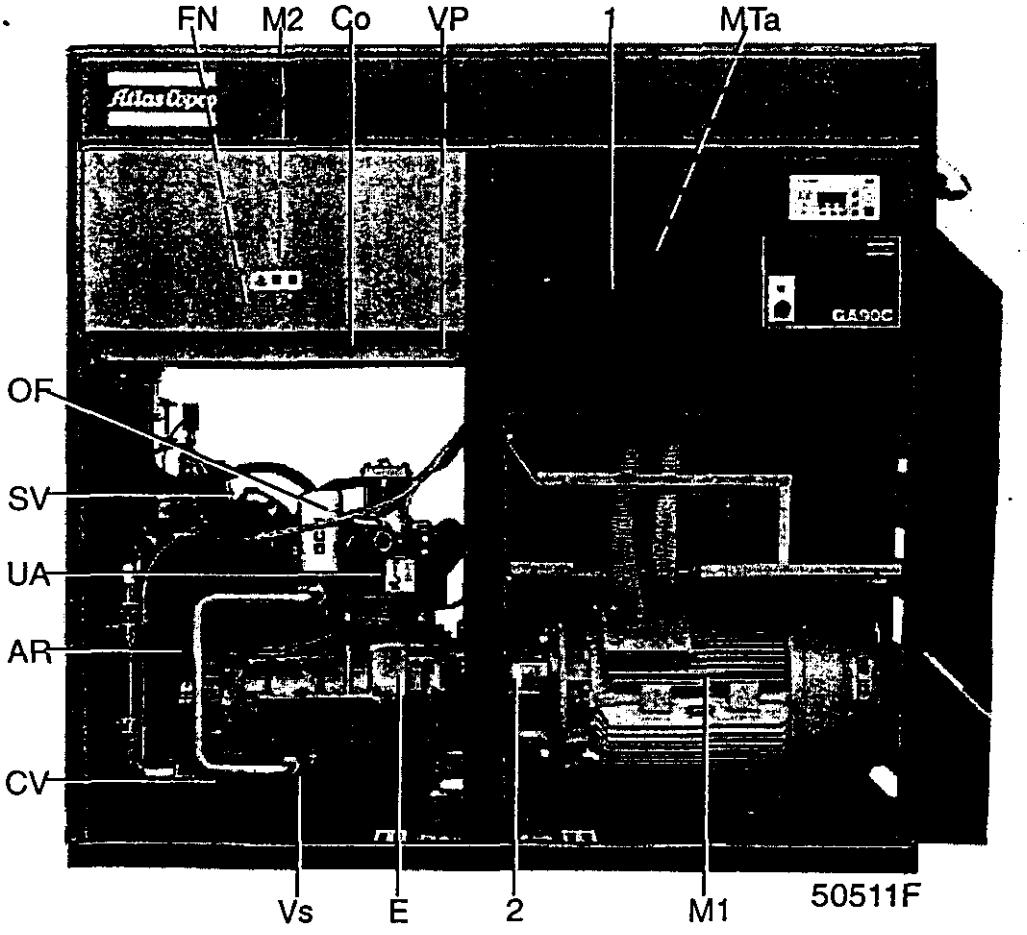

AR	Air receiver	MTa	Condensate trap	VP	Vent plug
Co	Oil cooler	M1	Drive motor	Vs	Oil stop valve
CV	Check valve	M2	Fan motor	1	Electric cabinet
E	Compressor element	OF	Oil filters	2	Arrow, motor rotation directio
FN	Fan	SV	Safety valve		(depends on compressor type)
		UA	Unloader		

Fig. 1.3 Front view of GA90C

HNF 7701
p9
REV 0

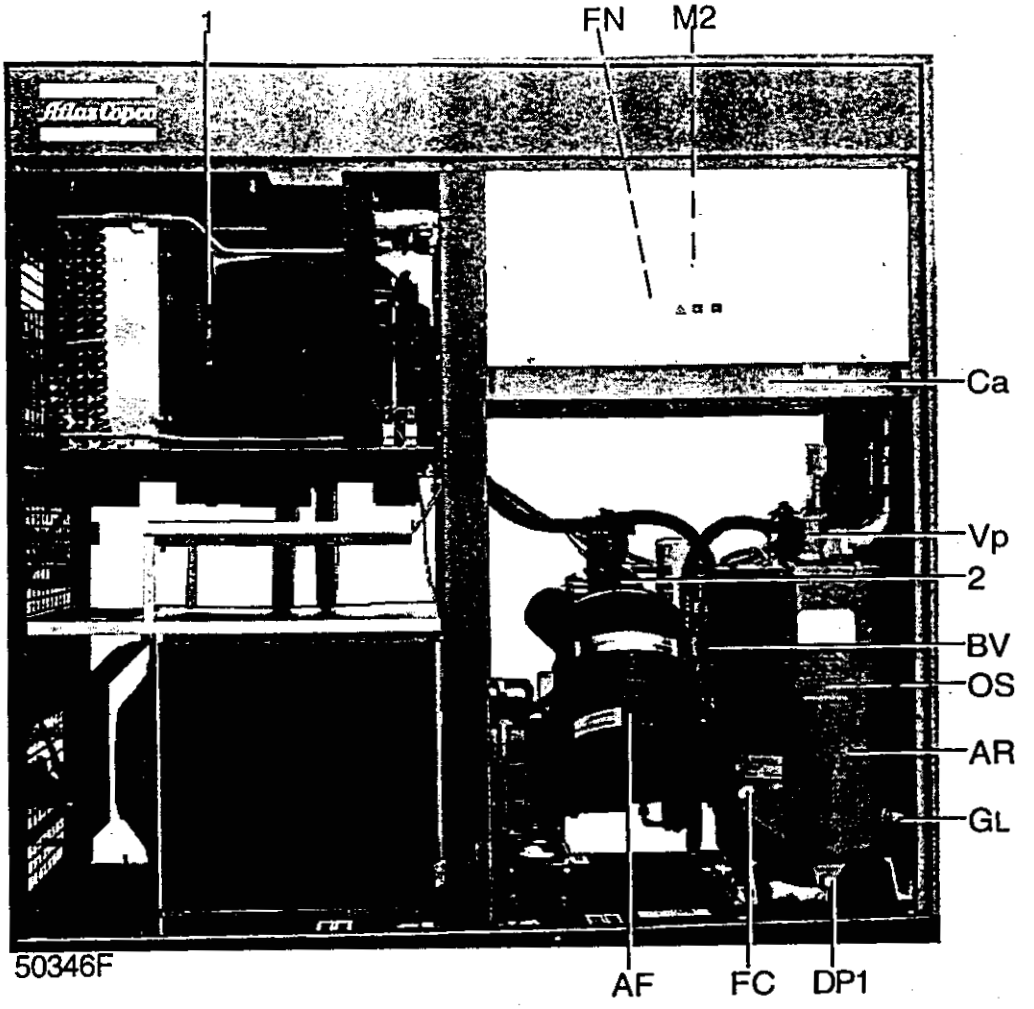

AF	Air filter	FC	Oil filler plug	OS	Oil separator element
AR	Air receiver	FN	Fan	Vp	Minimum pressure valve
BV	Oil cooler by-pass valve	Gl	Oil level gauge	1	Dryer
Ca	Air cooler	M2	Fan motor	2	Air inlet pipe
DP1	Oil drain plug, air receiver				

Fig. 1.4 Rear view of GA75 Full-feature

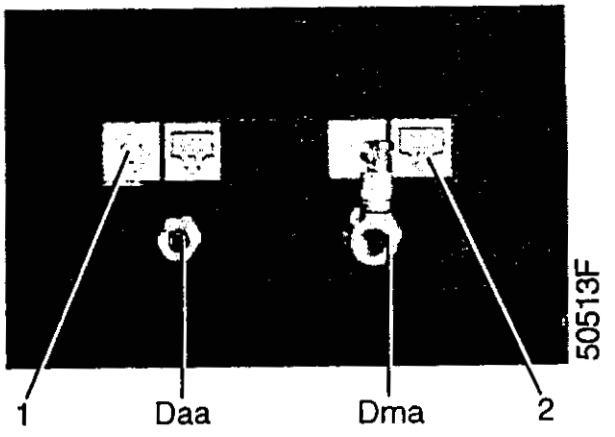

Daa	Automatic condensate drain outlet
Dma	Manual condensate drain valve
1	Pictograph, automatic condensate drain outlet
2	Pictograph, manual condensate drain valve

Fig. 1.5 Condensate drains

HNF 7701

1.1.3 Cooling and condensate drain systems (Fig. 1.6)

The cooling system comprises air cooler (Ca) and oil cooler (Co). On air-cooled compressors, the cooling air is generated by fan (FN). Water-cooled compressors have a cooling water system (Fig. 3.7). The water flows through the inlet pipe, the tubestacks of the air cooler and oil cooler, and the outlet pipe.

A condensate trap (MTa) is provided in the air outlet system. The trap is equipped with a valve for automatic condensate draining during operation (Daa-Fig. 1.5) and a manually operated valve for draining after stopping the compressor (Dma-Fig. 1.5).

1.2 Unloading/loading system (Fig. 1.6)

1.2.1 Unloading

If the air consumption is less than the air output of the compressor, the net pressure increases. When the net pressure reaches the unloading pressure, solenoid valve (Y1) is de-energized. The plunger of the valve returns by spring force:

1. The control pressure present in the chambers of loading plunger (LP) and unloading valve (UV) is vented to atmosphere via solenoid valve (Y1).
2. Loading plunger (LP) moves upwards and causes inlet valve (IV) to close the air inlet opening.
3. Unloading valve (UV) is opened by receiver pressure. The pressure from air receiver (AR) is released towards unloader (UA).
4. The pressure is stabilized at a low value. A small amount of air is kept drawn in and is blown to the unloader.

Air output is stopped (0 %), the compressor runs unloaded.

1.2.2 Loading

When the net pressure decreases to the loading pressure, solenoid valve (Y1) is energized. The plunger of solenoid valve (Y1) moves upwards against spring force:

1. Control pressure is fed from air receiver (AR) via solenoid valve (Y1) to loading plunger (LP) and unloading valve (UV).
2. Unloading valve (UV) closes the air blow-off opening. Loading plunger (LP) moves downwards and causes inlet valve (IV) to open fully.

Air output is resumed (100 %), the compressor runs loaded.

1.3 Elektronikon regulator

P10 REVO

The control system consists of an electronic regulator and a control panel.

1.3.1 Regulator (CM-Fig. 1.1)

The regulator has following functions:

1.3.1.1 Automatic control of the compressor

The regulator maintains the net pressure between programmable limits by automatically loading and unloading the compressor. A number of programmable settings, e.g. the unloading and loading pressures, the minimum stop time and the maximum number of motor starts are taken into account.

The regulator stops the compressor whenever possible to reduce the power consumption and restarts it automatically when the net pressure decreases. In case the expected unloading period is too short, the compressor is kept running to prevent too-short standstill periods.

Warning: A number of time-based automatic start/stop commands may be programmed. 2) Take into account that a start command will be executed (if programmed and activated), even after manually stopping the compressor.

1.3.1.2 Protecting the compressor

Shut-down
If the compressor element outlet temperature exceeds the programmed shut-down level, the compressor will be stopped. This will be indicated on display (4-Fig. 1.9). The compressor will also be stopped in case of overload of drive motor (M1) or fan motor (M2). 3)

Shut-down warning
If the compressor element outlet temperature exceeds a programmed value below the shut-down level, this will also be indicated to warn the operator before the shut-down level is reached.

Service warning
The regulator continuously monitors the oil, oil filters, oil separator and air filter. Each input is compared to programmed limits (temperatures, pressures and/or running hours). If these limits are exceeded, a message will appear on display (4-Fig. 1.9) to warn the operator to replace the indicated component.

Warning
A warning message also appears if:
On water-cooled compressors the cooling water outlet temperature exceeds the warning level.
On Full-feature compressors the dewpoint temperature exceeds the warning level.

COMPRESSOR LOADED (1)

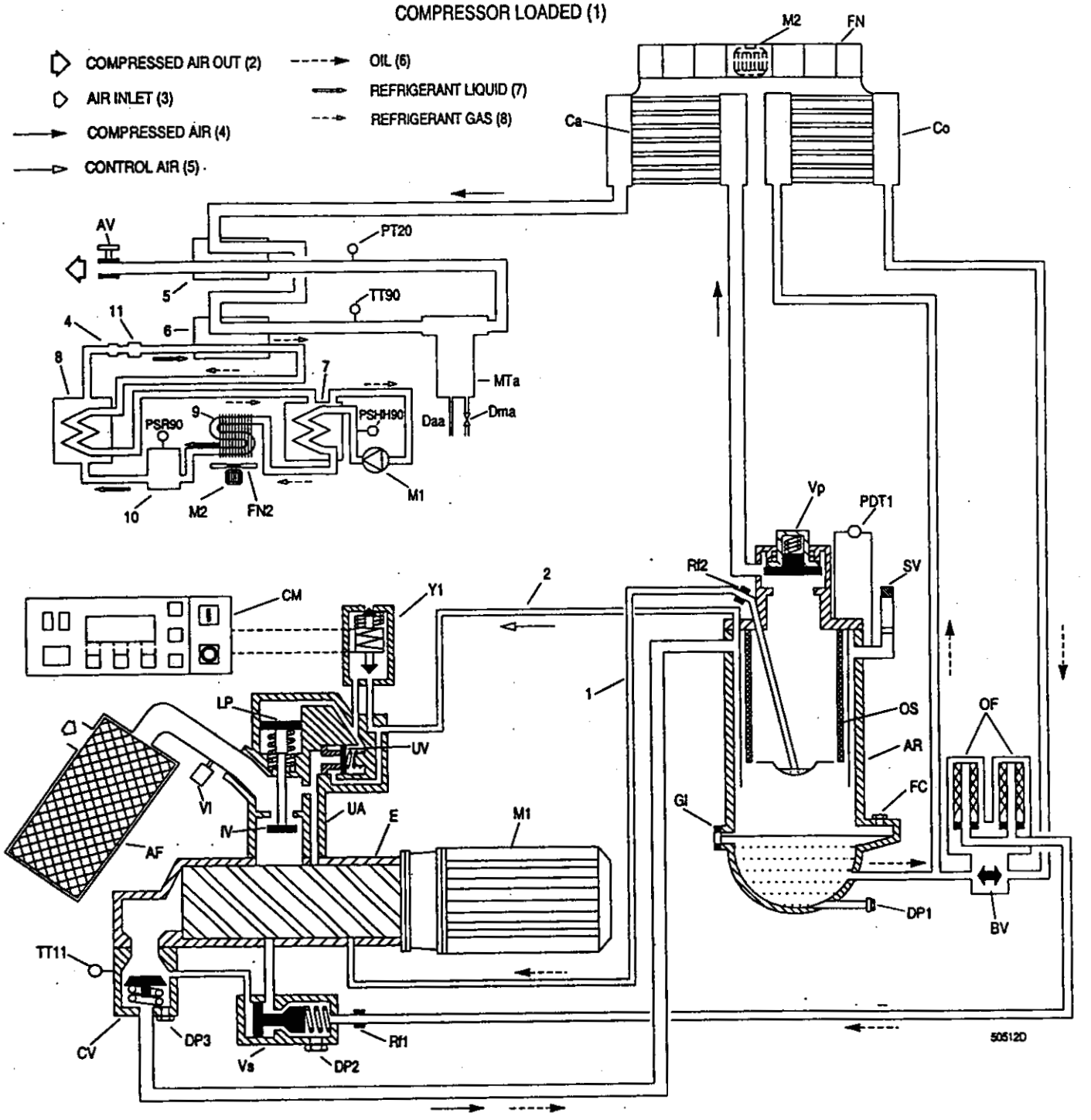

HNF 7701
P12
REV 0

AF	Air filter
AR	Air receiver/oil separator
AV	Air outlet valve
BV	Oil cooler by-pass valve
Ca	Air cooler
CM	Control module
Co	Oil cooler
CV	Check valve
Daa	Automatic condensate drain outlet
Dma	Manual condensate drain valve
DP1	Oil drain plug, air receiver
DP2	Oil drain plug, oil stop valve
DP3	Oil drain plug, check valve
E	Compressor element
FC	Oil filler plug
FN	Fan
Gl	Oil level gauge
IV	Inlet valve
LP	Loading plunger
MTa	Condensate trap
M1	Drive motor
M2	Fan motor
OF	Oil filters
OS	Oil separator element
PDT1	Pressure sensor, oil separator pressure difference
PT20	Pressure sensor, air outlet
Rf1,2	Restrictors
SV	Safety valve
TT11	Temperature sensor, compressor element outlet
UA	Unloader
UV	Unloading valve
VI	Air filter service indicator
Vp	Minimum pressure valve
Vs	Oil stop valve
Y1	Loading solenoid valve
1	Oil scavenging flexible
2	Flexible, control or blow-off air

On Full-feature also:

FN2	Fan, condenser
M1	Refrigerant compressor
M2	Motor, condenser fan
PSHH90	High pressure shut-down switch
PSR90	Condenser fan control switch
4	Filter
5	Air/air heat exchanger
6	Air/refrigerant heat exchanger (evaporator)
7	Liquid separator
8	Refrigerant/refrigerant heat exchanger
9	Condenser
10	Liquid receiver
11	Expansion valve

Fig. 1.6 Flow diagram (typical example of GA Full-feature)

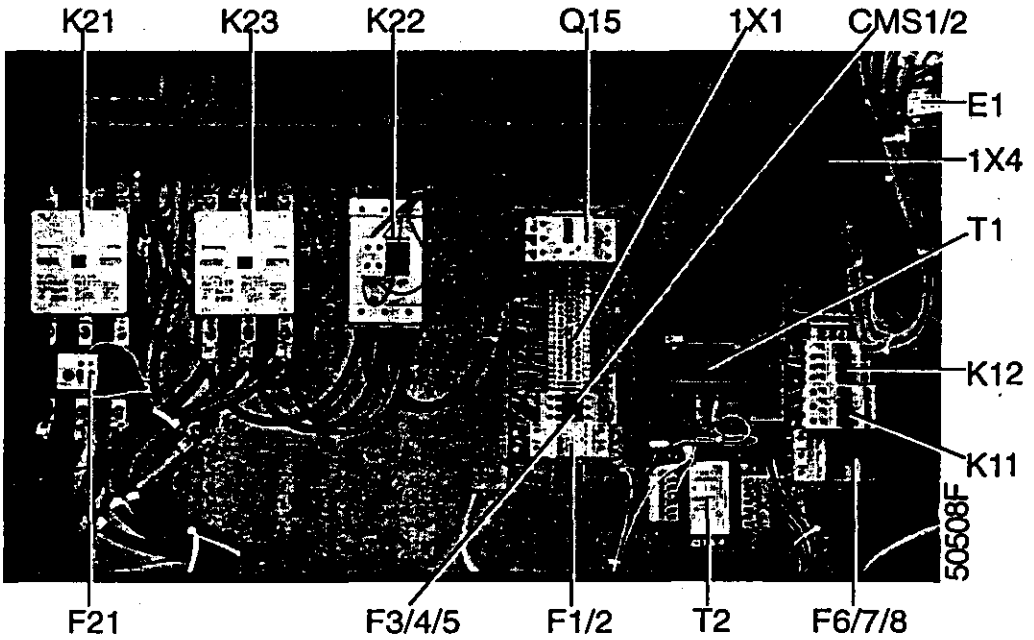

CMS1/2	Switches, compressor control module
E1	Electronic control module
F1/5	Fuses
F21	Overload relay, drive motor
K21	Line contactor
K22	Star contactor
K23	Delta contactor
Q15	Circuit breaker, fan motor 3)
T1/T2	Transformers
1X1	Terminal strip

On Full-feature also:

F6/7/8	Fuses
K11	Contactor, refrigerant compressor
K12	Contactor, condenser fan
1X4	Terminal strip

Fig. 1.7 Electric cubicle of 50 Hz compressors (typical example)

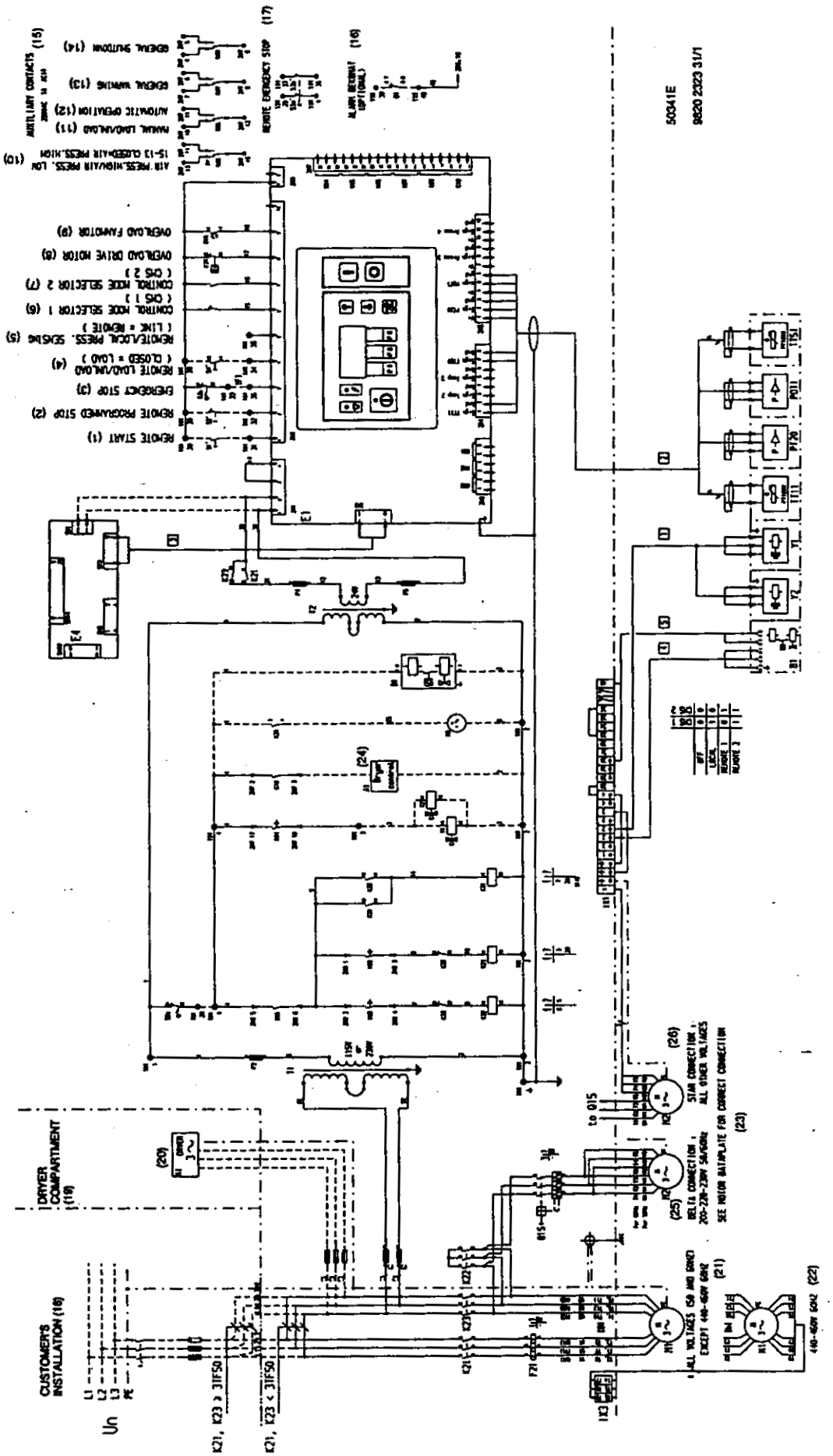
50341E
9820 2323 31/1
AUXILIARY CONTACTS (15)
GENERAL SHUTDOWN (14)
GENERAL WARNING (13)
AUTOMATIC OPERATION (12)
MANUAL LOADUNLOAD (11)
AIR PRESS.HIGH/AIR PRESS. LOW
15-13 CLOSED=AIR PRESS.HIGH (10)
REMOTE EMERGENCY STOP (17)
ALARM REPEATER (OPTIONAL) (16)
OVERLOAD FANMOTOR (9)
OVERLOAD DRIVE MOTOR (8)
CONTROL MODE SELECTOR 2 (7)
(CMS 2)
CONTROL MODE SELECTOR 1 (6)
(CMS 1)
REMOTE/LOCAL PRESS. SENSING (5)
(LINK = REMOTE)
REMOTE LOAD/UNLOAD (4)
(CLOSED = LOAD)
EMERGENCY STOP (3)
REMOTE PROGRAMMED STOP (2)
REMOTE START (1)
PT50
PT20
PT11
TT51
TT1
TT2
B1
OFF
LOCAL
REMOTE 1
REMOTE 2
(24)
(26)
STAR CONNECTION ALL OTHER VOLTAGES
(23)
SEE MOTOR NAMEPLATE FOR CORRECT CONNECTION
DELTA CONNECTION 200-230-230V 50/60Hz
(25)
(21)
ALL VOLTAGES 50 AND 60HZ EXCEPT 440-460V 60HZ
(22)
440-460V 60HZ
to 015
DRYER COMPARTMENT (19)
(20)
CUSTOMER'S INSTALLATION (18)
L1
L2
L3
PE
K21, K23 > 31F50
K21, K23 < 31F50
K21
K23
F21
K13

HAOF 7701
P14
REVO

SENSORS/LOADING SOLENOID VALVE

PDT1	Pressure sensor, pressure difference over oil separator
PT20	Pressure sensor, air outlet
TT11	Temperature sensor, compressor element outlet
TT51	Temperature sensor, cooling water outlet 4)
Y1	Loading solenoid valve

CUBICLE

F1/5	Fuses
F21	Overload relay, drive motor
K21	Line contactor
K22	Star contactor
K23	Delta contactor
Q15	Circuit breaker, fan motor 3)
T1/T2	Transformers
1X1/3	Terminal strips

CONTROL MODULE (E1)

I	Start button
K01	Blocking relay
K02	Auxiliary relay, star contactor
K03	Auxiliary relay, delta contactor
K04	Auxiliary relay, loading-unloading
K05	Auxiliary relay, high/low pressure
K06	Auxiliary relay, manual/automatic operation
K07	Auxiliary relay, general warning
K08	Auxiliary relay, general shut-down
K10	Auxiliary relay, dryer control
0	Stop button
S3	Emergency stop button

MOTORS

M1	Drive motor
M2	Fan motor 3)
M3	Fan motor, electric cabinet 5)

OPTIONAL EQUIPMENT

A1	Dryer
B1	Electronic condensate drain
E4	Communication module
Y2	Solenoid valve, modulating control

Fig. 1.8 Electrical diagram of 50 Hz compressors with star-delta starter (typical example)

1.3.1.3 Automatic restart after voltage failure

For compressors leaving the factory, this function is made inactive. If desired, the function can be activated. Consult Atlas Copco.

Warning: *If activated and provided the module was in the automatic operation mode, the compressor will automatically restart if the supply voltage to the module is restored within a programmed time period.*

The power recovery time (the period within which the voltage must be restored to have an automatic restart) can be set between 1 and 254 seconds or to symbol 00!. If the power recovery time is set to 00!, the compressor will always restart after a voltage failure, no matter how long it takes to restore the voltage.

1.3.2 Control panel (Fig. 1.9)

Ref.	Designation	Function
1	Automatic operation LED	Indicates that the regulator is automatically controlling the compressor: the compressor is loaded, unloaded, stopped and restarted depending on the air consumption and the limitations programmed in the regulator.
2	Voltage on LED	Indicates that the voltage is switched on.
3	General alarm LED	Is alight if a warning or shut-down warning condition exists or if a sensor is out of order.

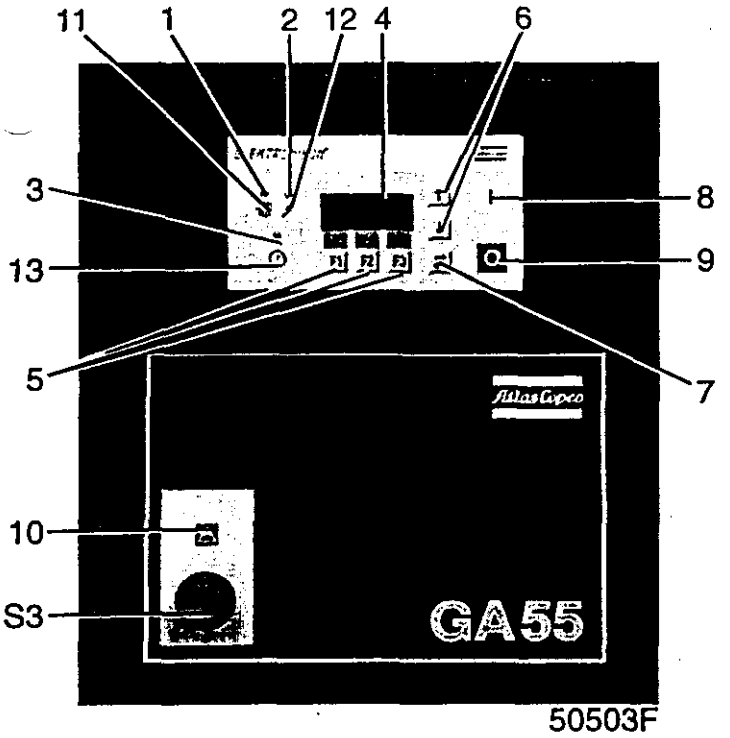

Fig. 1.9 Control panel

Ref.	Designation	Function
		Blinks in case of shut-down, if a sensor with shut-down function (e.g. TT11) is out of order or after an emergency stop. Consult the User manual for Elektronikon regulator, section "Status data submenu".
4	Display	Indicates messages concerning the compressor operating condition, a service need or a fault. Consult the User manual for Elektronikon regulator, sections "Status data submenu" and "Service submenu".
5	Function keys	Keys to control and program the compressor. See below.
6	Scroll keys	Keys to scroll through the display.
7	Tabulator key	Key to go to the next field of the display.
	Start button	Push button to start the compressor. LED (1) lights up indicating that the regulator is operative (in automatic operation). The LED goes out after unloading the compressor manually.
9	Stop button	Push button to stop the compressor. LED (1) goes out. The compressor will stop after running in unloaded condition for 30 seconds.
S3	Emergency stop button	Push button to stop the compressor immediately in case of emergency. After remedying the trouble, unlock the button by pulling it out (on earlier production units by turning it to the left).

Pictographs

10 *Emergency stop*
11 Automatic operation
12 Voltage on
13 Alarm

1.3.3 Function keys (Fig. 1.9)

The keys are used:
- To manually load/unload the compressor
- To call up or to program settings
- To reset a motor overload, shut-down or service message, or an emergency stop
- To have access to all data collected by the regulator

The functions of the keys vary depending on the displayed menu. The actual function is abbreviated and indicated on the bottom line of the display just above the relevant key. The most common abbreviations are listed below.

Abbreviation	Designation	Function
Add	Add	To add compressor start/stop commands (day/hour)
Canc	Cancel	To cancel a programmed setting when programming parameters
Del	Delete	To delete compressor start/stop commands
Lim	Limits	To show limits for a programmable setting
List	List	To list programmed start/stop commands (day/hour)
Load	Load	To load the compressor manually
Main	Main	To return from a menu to the main display (Fig. 1.10)
Menu	Menu	*Starting from the main display* (Fig. 1.10), to initiate the main menu (Fig. 1.11) which gives access to submenus Starting from a submenu, to return to the main menu (Fig. 1.11)

HNF 7701
p16
REVO

Abbre-viation	Desig-nation	Function
Mod	Modify	To modify programmable settings
More	More	To have a quick look at the compressor status
Prog	Program	To program modified settings
Rset	Reset	To reset a timer or message
Rtrn	Return	To return to a previously shown option or menu
Slct	Select	To select a submenu or to read more details of a selection shown on display
Unld	Unload	To unload the compressor manually

1.3.4 Menu-driven control programs

To facilitate programming and controlling the compressor, menu-driven programs are implemented in the electronic module.

The User manual for Elektronikon regulator for GA5 up to GA90C deals elaborately with all regulator functions.

Program/Function	Description
MAIN DISPLAY	Shows in short the operation status of the compressor. It is the gateway to all functions. See Fig. 1.10.
More	Allows a quick look at the actual status of the compressor. See section 3.4.
Load/Unld	To manually load/unload the compressor.
MAIN MENU	See Fig. 1.11. It is the gateway to following menus:
Status data	Calling up the status of the compressor protection functions (service warning, shut-down and shut-down warning). Resetting of a shut-down and motor overload. See section 1.3.1.
Measured data	Calling up actually measured values and the status of the motor overload protection.
Hours	Calling up the running hours, loading hours, regulator hours and number of motor starts.
Service	Calling up and resetting the service messages for the oil, oil filter, oil separator, air filter.
Test	Allows a display test.
Modify settings	Modifying the settings for regulation (e.g. loading and unloading pressures), for protection (e.g. temperature shut-down level) and for service (e.g. for the oil).
Timer	Programming automatic compressor start/stop commands.
Configuration	Programming the time, date, display language, units, motor start mode and date format.
Saved data	Calling up the saved data: last shut-down, last emergency stop, longest load, longest unload.

Selecting a menu
When the voltage is switched on, the MAIN DISPLAY (Fig. 1.10) is shown automatically. The other menus are selected by pressing one of function keys (5-Fig. 1.9). Pushing the key <<Menu>> initiates the MAIN MENU (Fig. 1.11), giving access to most other functions via submenus; the submenus can be selected by pressing the key <<Slct>> (select).

Whenever displayed on the bottom line of the screen, press the key <<Menu>> to return from a submenu to the MAIN MENU. Whenever displayed, press the key <<Main>> to return from a menu to the MAIN DISPLAY.

Delivery air		
bar		7.0
Auto loaded		
Menu	More	Unld
F1	F2	F3

Fig. 1.10 Example of the main display

Status data		
		↓
Main	Slct	
F1	F2	F3

Fig. 1.11 Example of a main menu

1.4 Air dryer on GA Full-feature (Fig. 1.6)

1.4.1 Compressed air circuit

Compressed air enters heat exchanger (5) and is cooled by the outgoing, dried air. Moisture in the incoming air starts to condense. The air then flows through heat exchanger (6) where the refrigerant evaporates and withdraws heat from the air. This cools the air to close to the evaporating temperature of the refrigerant. More water in the air condenses. The cold air then flows through condensate trap (MTa) which separates condensate from air. The condensate is automatically drained through outlet (Daa). The cold, dried air then flows through heat exchanger (5), where it is warmed up by the incoming air.

1.4.2 Refrigerant circuit

Compressor (M1) delivers high-pressure refrigerant gas which flows via liquid separator (7) through condenser (9) where most of the refrigerant condenses. The liquid flows to expansion valve (11) where it expands to evaporating pressure. The refrigerant enters evaporator (6) where it withdraws heat from compressed air by further evaporation. The refrigerant gas is sucked in by compressor (M1).

Footnotes chapter 1

1) The valve starts opening at 60 degrees celsius and is fully open at 75 degrees celsius for 13 bar and 175 psi compressors.
2) See User manual for Elektronikon regulator, section "Timer submenu".
3) Air-cooled compressors only.
4) Water-cooled compressors only.
5) For high-temperature versions only (consult Atlas Copco).

HMF 7701
p 18
REV 0

2 Installation

2.1 Dimension drawings (Figs. 2.1 and 2.2)

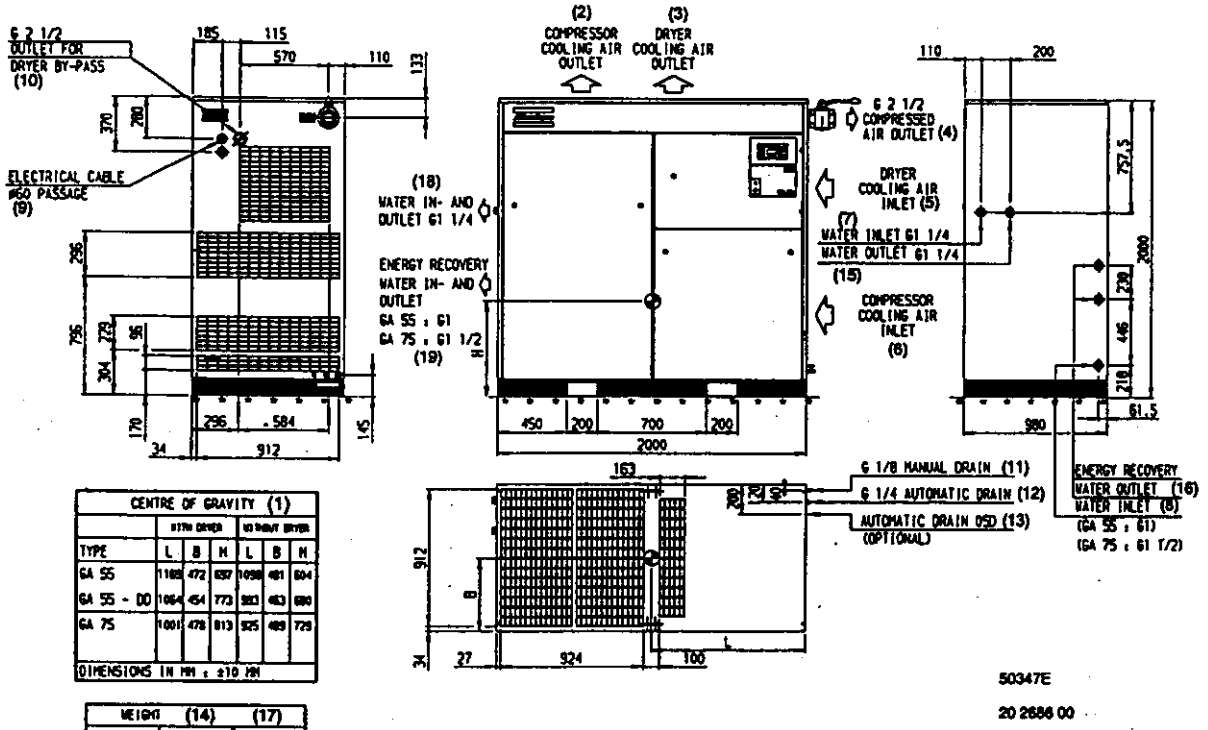

CENTRE OF GRAVITY (1)						
	WITH DRYER			WITHOUT DRYER		
TYPE	L	B	H	L	B	H
GA 55	1188	472	697	1098	481	604
GA 55 - DD	1064	454	773	983	463	680
GA 75	1001	478	813	925	489	729

DIMENSIONS IN MM : ±10 MM

WEIGHT	(14)	(17)
TYPE	WITH DRYER	WITHOUT DRYER
GA 55	1425	1260
GA 55 - DD	1406	1241
GA 75	1550	1375

WEIGHTS IN KG (OIL INC.) : ±20 KG

Fig. 2.1 Dimension drawing, GA55/75

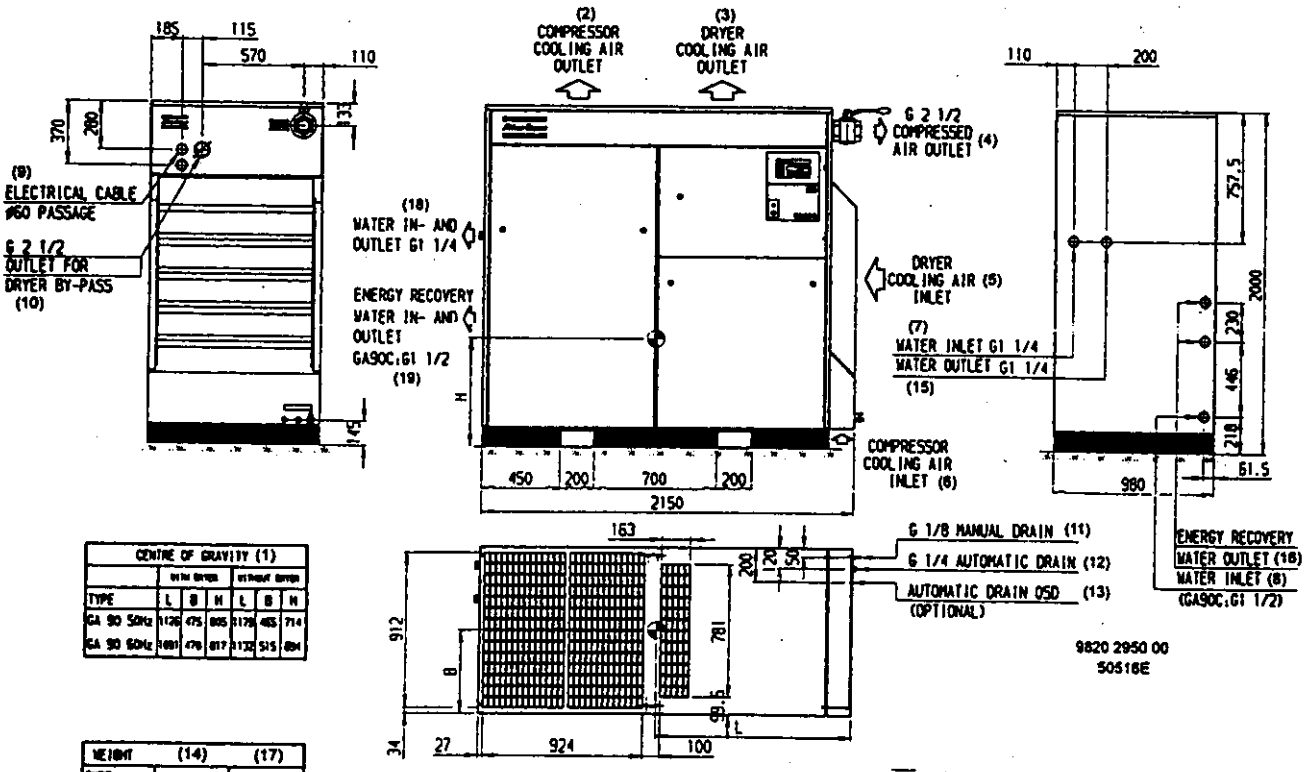

CENTRE OF GRAVITY (1)						
	WITH DRYER			WITHOUT DRYER		
TYPE	L	B	H	L	B	H
GA 90 50Hz	1126	475	805	1179	485	714
GA 90 60Hz	1081	478	817	1132	515	694

WEIGHT	(14)	(17)
TYPE	WITH DRYER	WITHOUT DRYER
GA 90 50Hz	1625	1453
GA 90 60Hz	1783	1619

WEIGHTS IN KG (OIL INC.) : ±20 KG

Fig. 2.2 Dimension drawing, GA90C

2.2 Installation proposal (Fig. 2.3)

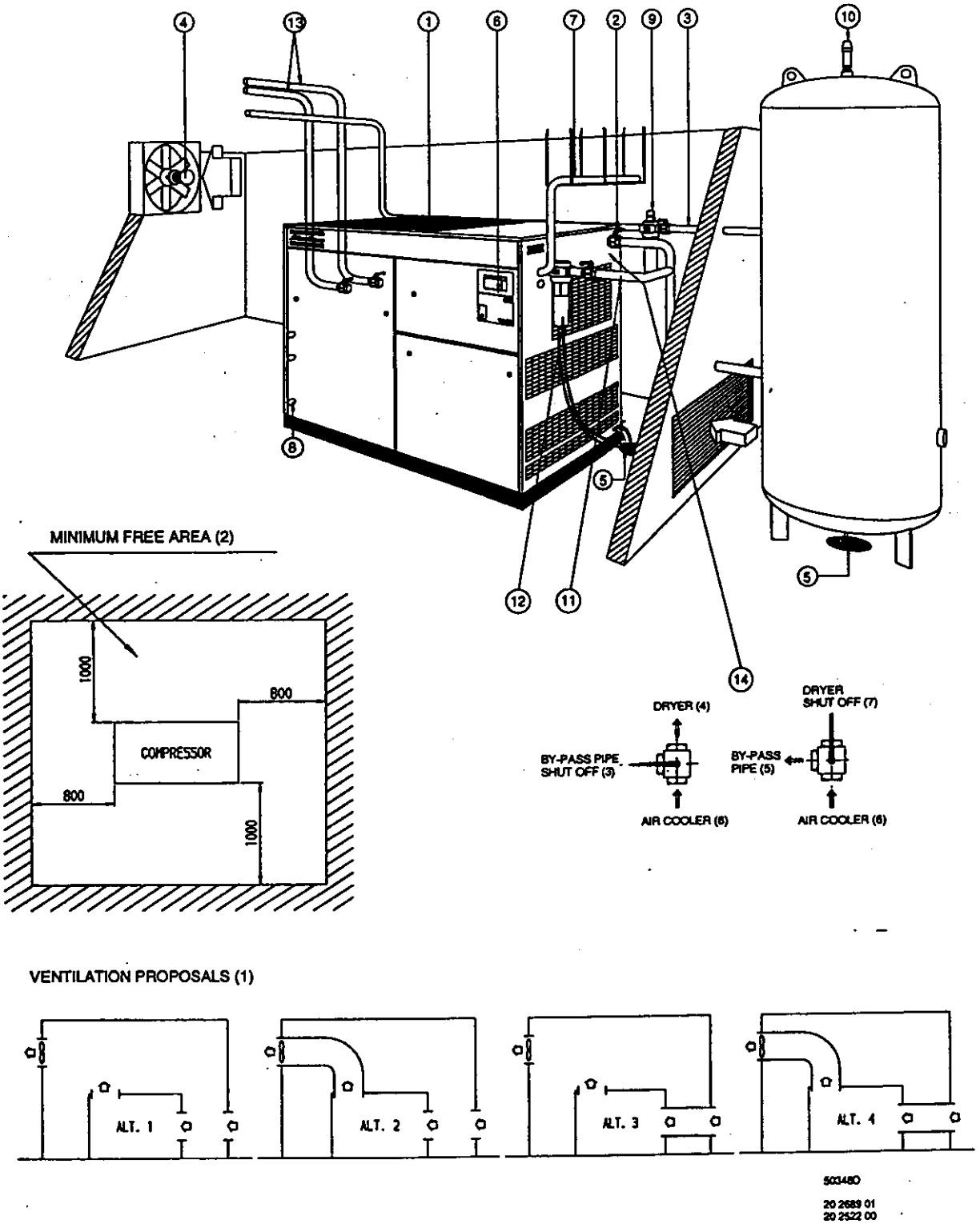

Fig. 2.3 Installation proposal (typical example of GA55/75)

HMF 7701
P20
REV 0

Ref. on Fig. 2.3	Description/recommendation

1 Install the compressor on a solid, level floor suitable for taking the weight.

2 Position of compressed air outlet valve.

3 The maximum total pipe length (including interconnecting piping between compressor and receiver) can be calculated as follows:

$$L = (dp \times d^5 \times p) / (450 \times Qc^{1.85})$$

L = pipe length in m
dp = maximum allowable pressure drop (recommended 0.1 bar)
d = inner diameter of pipe in mm
p = compressor outlet pressure in bar absolute
Qc = free air delivery of compressor in l/s

4 Ventilation: the inlet grids and ventilation fan should be installed in such a way that any recirculation of cooling air to the compressor or dryer is avoided. The air velocity to the grids must be limited to 5 m/s. The maximum allowable pressure drop over the cooling air ducts is 50 Pa.

- For alternatives 1 and 3, the required ventilation capacity to limit the compressor room temperature can be calculated as follows:

  Qv = 1.06 N / dT for GA Pack air-cooled compressors
  Qv = (1.06 N + 6) / dT for GA Full-feature air-cooled compressors

  Qv = 0.16 N / dT for GA Pack water-cooled compressors
  Qv = (0.16 N + 6) / dT for GA Full-feature water-cooled compressors

  Qv = required ventilation capacity in m^3/s
  N = nominal motor power in kW
  dT = temperature increase in compressor room

- For alternatives 2 and 4: the fan capacity should match the compressor fan capacity at a pressure head equal to the pressure drop over the air ducts.

5 The drain pipes to the drain collector must not dip into the water of the drain collector. Atlas Copco has oil/water separators (type OSD) to separate the major part of the oil from the condensate to ensure that the condensate meets the requirements of the environmental codes.

Ref. on Fig. 2.3	Description/recommendation

6 Position of control panel.

7 Position of mains cables.

8 Provision for inlet and outlet of energy recovery system (system is optional).

9 Filter, type DD, for general purpose filtration (optional). The filter traps solid particles down to 1 micron with max. oil carry-over of 0.5 mg/m^3. A high-efficiency filter, type PD (optional), may be installed downstream of a DD filter. This filter traps solid particles down to 0.01 micron with max. oil carry-over of 0.01 mg/m^3. If oil vapour and odours are undesirable, a filter of the QD type (optional) should be installed downstream of the PD filter.

10 The air receiver (optional) should be installed in a frost-free room on a solid, level floor.

For normal air consumption, the volume of the air net (receiver and piping) can be calculated as follows:

$$V = (0.25 \times Qc \times p1 \times To) / f_{max} \times dp \times T1$$

V = volume of air net in l
Qc = free air delivery of compressor in l/s
p1 = compressor air inlet pressure in bar absolute
f_{max} = cycle frequency = 1 cycle/30 s
dp = difference between unloading and loading pressures
T1 = compressor air inlet temperature in K
To = air receiver temperature in K

By-pass system for compressors with dryer (optional)

11 Dryer by-pass pipe.

12 Condensate trap.

14 Dryer by-pass valve (inside the bodywork).

For water-cooled compressors

13 Position of cooling water pipes.

2.3 Electric cable size 1)

2.3.1 For GA55/GA55 W 2) 3)

Supply voltage (V)	Frequency - Approval	LC cable GA Pack (mm²/AWG)	MC cable GA Pack (mm²/AWG)	LC cable GA Full-feature (mm²/AWG)	MC cable GA Full-feature (mm²/AWG)
230	50 - IEC	2 x 35	2 x 50	2 x 50	2 x 50
400	50 - IEC	50	70	50	70
500	50 - IEC	35	50	35	50
220-230	60 - IEC	2x 35	2x 50	2x 50	2x 50
220-230	60 - CSA/UL	2x AWG3	2x AWG0	2x AWG2	2x AWG00
380	60 - IEC	50	70	70	70
380	60 - CSA/UL	AWG2	AWG00	AWG1	AWG000
440-460	60 - IEC	35	50	50	50
440-460	60 - CSA/UL	AWG3	AWG0	AWG2	AWG00
575	60 - IEC	25	35	35	35
575	60 - CSA/UL	AWG4	AWG2	AWG4	AWG1

2.3.2 For GA75/GA75 W 2) 3)

Supply voltage (V)	Frequency - Approval	LC cable GA Pack (mm²/AWG)	MC cable GA Pack (mm²/AWG)	LC cable GA Full-feature (mm²/AWG)	MC cable GA Full-feature (mm²/AWG)
230	50 - IEC	2x 70	2x 70	2x 70	2x 70
400	50 - IEC	2x 25	2x 35	2x 25	2x 35
500	50 - IEC	50	70	50	70
220-230	60 - IEC	2x 70	2x 70	2x 70	2x 95
220-230	60 - CSA/UL	2x AWG1	2x AWG000	2x AWG0	2x AWG0000
380	60 - IEC	2x 25	2x 35	2x 25	2x 35
380	60 - CSA/UL	2x AWG4	2x AWG2	2x AWG4	2x AWG1
440-460	60 - IEC	2x 25	2x 25	2x 25	2x 25
440-460	60 - CSA/UL	2x AWG4	2x AWG3	2x AWG4	2x AWG2
575	60 - IEC	50	50	50	50
575	60 - CSA/UL	AWG2	AWG00	AWG4	AWG1

2.3.3 For GA90C 2) 3)

Supply voltage (V)	Frequency - Approval	LC cable GA Pack (mm²/AWG)	MC cable GA Pack (mm²/AWG)	LC cable GA Full-feature (mm²/AWG)	MC cable GA Full-feature (mm²/AWG)
230	50 - IEC	2x 70	2x 95	2x 70	2x 95
400	50 - IEC	2x 35	2x 35	2x 35	2x 35
500	50 - IEC	70	70	70	95

1HNF-7701
P22
REVD

Supply voltage (V)	Frequency - Approval	LC cable GA Pack (mm²/AWG)	MC cable GA Pack (mm²/AWG)	LC cable GA Full-feature (mm²/AWG)	MC cable GA Full-feature (mm²/AWG)
220-230	60 - IEC	2x 70	2x 95	2x 95	2x 95
220-230	60 - CSA/UL	2x AWG0	2x AWG4/0	2x AWG0	2x AWG250
380	60 - IEC	2x 35	2x 35	2x 35	2x 50
380	60 - CSA/UL	2x AWG3	2x AWG1	2x AWG3	2x AWG0
440-460	60 - IEC	70	95	95	95
440-460	60 - CSA/UL	AWG0	AWG4/0	AWG0	AWG250
575	60 - IEC	50	70	70	70
575	60 - CSA/UL	AWG1	AWG2/0	AWG1	AWG3/0

2.4 Electrical connections (Figs. 1.7 and 1.8)

- Provide an isolating switch.
- Check the fuses and the setting of the overload relay. See section 7.
- If terminals 1, 3 and 5 of motor contactors (K21) and (K23) are not bridged, connect power supply cables to terminals 1, 3 and 5 of contactor (K21) and to terminals 1, 3 and 5 of contactor (K23).
- If terminals 1, 3 and 5 of motor contactors (K21) and (K23) are bridged, connect the power supply cables to terminals 1, 3 and 5 of contactor (K21).
- Connect the earth conductor to earth bolt (PE) and the neutral conductor (if provided) to connector (N).

2.5 Pictographs

1 Water outlet
2 Manual condensate drain
3 Water inlet
4 Automatic condensate drain
5 Before connecting compressor electrically, consult Instruction book for motor rotation direction
6 Switch off voltage and depressurize compressor before repairing
7 Torques for steel (Fe) or brass (CuZn) bolts
8 Lightly oil gasket of oil filter, screw it on and tighten by hand (approx. half a turn)
9 Consult Instruction book before greasing
10 Switch off voltage before removing protecting cover inside electric cubicle
11 Consult Instruction book before carrying out maintenance
12 Stop compressor before cleaning coolers
13 Warning: voltage
14 Warning: potential risk of sudden releasing of spring underneath cover of unloader during disassembling, have possible repair carried out by Atlas Copco

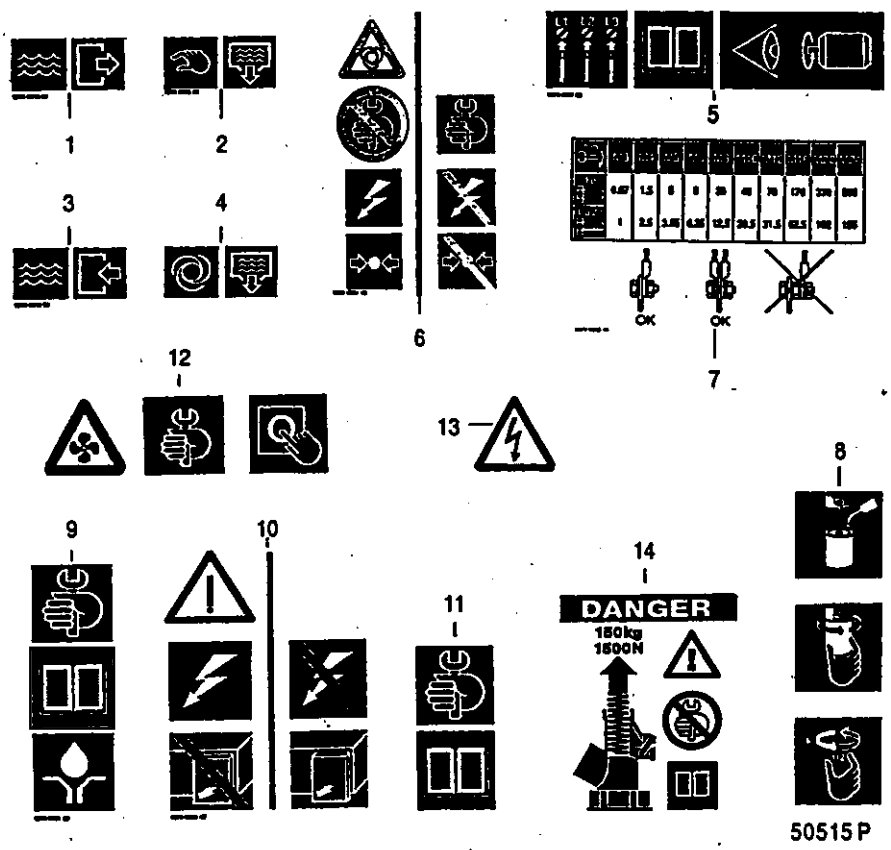

Fig. 2.4 Pictographs (typical examples)

2.6 Cooling water requirements

Following requirements are given as a general rule to prevent cooling water problems. If in any doubt, consult Atlas Copco.

Recommended maxima - mg/l	Recirculating system	Open system
Chloride (Cl^-)	< 600	< 150
Sulphate (SO_4^{--})	< 400	< 250
Total solids	< 3000	< 750
Suspended solids (as SiO_2)	< 10	< 10
Free chlorine (Cl_2)	< 4	< 2
Ammonia (NH_4^+)	< 0.5	< 0.5
Copper	< 0.5	< 0.5
Iron	< 0.2	< 0.2
Manganese	< 0.1	< 0.1
Oxygen	< 3	< 3
Carbonate hardness (as $CaCO_3$)	50-1000	50-500
Organics ($KMnO_4$ Consumption)	< 25	< 10

No algae
No oil

Remark
Chloride and sulphate are interactive. In pass-through systems the sum of the squares must not exceed 85,000. For recirculating systems with proper controls and treatment, the sum of the squares may be up to 520,000. Note that the sulphate value must include any sulphite present.

Footnotes chapter 2

1) If the size does not comply with local legislation, the stricter of the two shall apply.
2) For IEC approval:
   - LC stands for loose conductors in the air; values according to DIN VDE 0113 - EN 60204 T1 - IEC 204-1.
   - MC stands for cables in open cable trunking system, in cable trays or on walls; same values for loose conductors in a conduit or in a cable trunking system; values according to EN 60204-1 Table 5.
3) For CSA/UL approval:
   - LC stands for loose copper conductors in the air.
   - MC stands for not more than 3 loose copper conductors in a raceway or in a cable; values according to CE Code handbook Table 1 and Table 2.
   - For CSA/UL conductors with AWG size, the sizes are valid for cables with insulation of 85/90 degrees celsius.

3 Operating instructions

3.1 Initial start-up

3.1.1 Safety

The operator must apply all relevant safety precautions, including those mentioned in this book.

3.1.2 User manual

Read the "User manual for Elektronikon regulator for GA5 up to GA90C" to familiarize yourself with all regulator functions.

3.1.3 Outdoor/altitude operation

If the compressor is installed outdoors or if the air inlet temperature can be below 0 degrees celsius, precautions must be taken. In this case, and also if operating at high altitude, consult Atlas Copco.

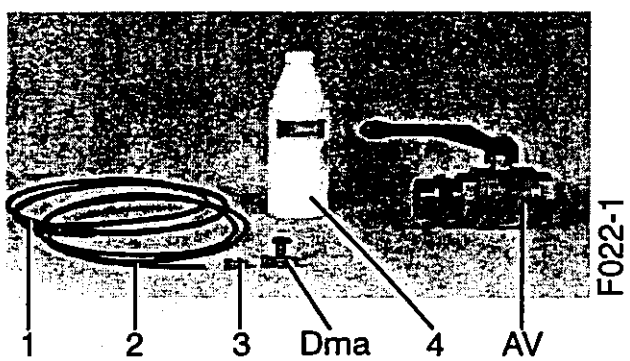

AV	Air outlet valve
Dma	Manual condensate drain valve
1	Condensate drain flexible for automatic drain
2	Condensate drain flexible for manual drain
3	Connection between flexible (2) and valve (Dma)
4	Bottle containing Atlas Copco Roto-injectfluid

Fig. 3.1 Components delivered loose with compressor (typical examples)

HNF 7701
P24
REVO

3.1.4 Moving/lifting

The compressor can be moved by a lift truck using the slots in the frame. Make sure that the forks protrude from the other side of the frame. The compressor can also be lifted after inserting beams in the slots. Make sure that the beams cannot slide and that they protrude from the frame equally. The chains must be held parallel to the bodywork by chain spreaders in order not to damage the compressor. The lifting equipment must be placed in such a way that the compressor will be lifted perpendicularly. Lift smoothly and avoid twisting.

3.1.5 External compressor status indication

The electronic regulator is provided with auxiliary contacts (K05, K06, K07 and K08-Fig. 1.8) at the back of electronic module (E1-Fig. 1.7) for external indication of:

- low or high air pressure (K05), 15-13 closed means high air pressure
- manual load/unload or automatic operation (K06)
- warning condition (K07)
- shut-down condition (K08)

Maximum load for these contacts: 1 A / 250 V AC. Stop the compressor and switch off the voltage before connecting external equipment. Consult Atlas Copco.

3.1.6 Compressor control modes

The electronic regulator has two switches (CMS1/2-Fig. 1.7) to select following compressor control modes (0 = open / 1 = closed):

CMS1	CMS2	Compressor mode
0	0	The compressor is **switched off.**
1	0	The compressor is in **local control mode** (remote control is made inactive): the compressor will react to commands entered by the buttons on the control panel. Compressor start/stop commands via function **Timer** (see section 1.3.1) are active, if programmed.
0	1	The compressor is in **remote control mode** (local control is made inactive): the compressor will react to commands from external switches. Emergency stop (S3) remains active. Compressor start/stop commands via function **Timer** (see section 1.3.1) are still possible. **For remote starting and stopping:** Connect a remote start button (normally open contact) between terminals 30 and 31 and connect a remote stop button (normally closed contac between terminals 30 and 32 of terminal strip (1X1-Fig. 1.7). Bridge terminals 30 and 34: In this mode, the outlet pressure is still sensed by pressure transducer (PT20-Fig. 1.6), resulting in loading and unloading of the compressor at the pressures programmed in the electronic regulator. If terminals 30 and 34 are not bridged, the compressor is switched out of automatic load/unload operation and remains running unloaded. **For remote loading/unloading (via external pressure switch):** Bridge terminals 30 and 35 and connect a load/unload switch between terminals 30 and 34. This results in loading and unloading of the compressor at the closing and opening pressures of the external pressure switch respectively.
1	1	Compressor is **computer-controlled** via communication module (E4-Fig. 1.8). 10) Consult Atlas Copco.

Attention
Have the modifications checked by Atlas Copco. Stop the compressor and switch off the voltage before connecting external equipment. Only voltage-free contacts are allowed.

Start-up

1. Following transport fixations, painted red, must be removed (Figs. 3.2 and 3.3):
   - bushes (2) from both gear casing supports
   - bushes (5) from both air receiver supports
   - support (3)
2. Check that the electrical connections correspond to the local codes. Check the connections for correct tightness. The installation must be earthed and protected against short circuits by fuses of the inert type in all phases. An isolating switch must be installed near the compressor.
3. Check transformer (T1-Fig. 1.7) for correct connection, the settings of drive motor overload relay (F21) and fan motor circuit breaker (Q15) 2), and that overload relay (F21) is set for automatic resetting.
4. Fit the air outlet valve (AV-Fig. 1.1). Close the valve Connect the air net to the valve.
5. Connect the manual condensate drain valve (Dma-Fig. 1.5). Close the valve. Connect the valve to a drain collector. See also Fig. 2.3, reference 5.

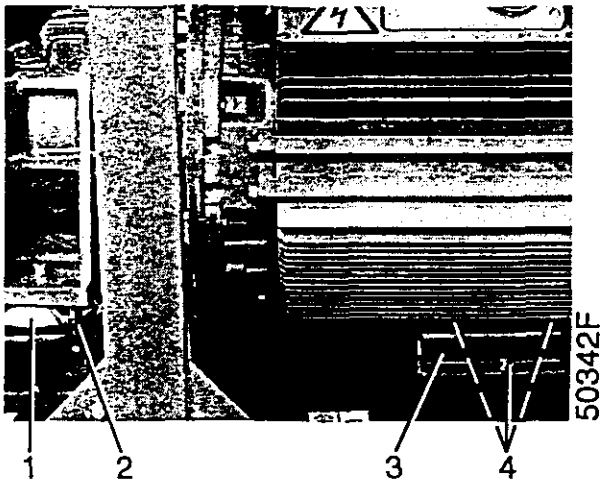

Fig. 3.2 Gear casing/motor

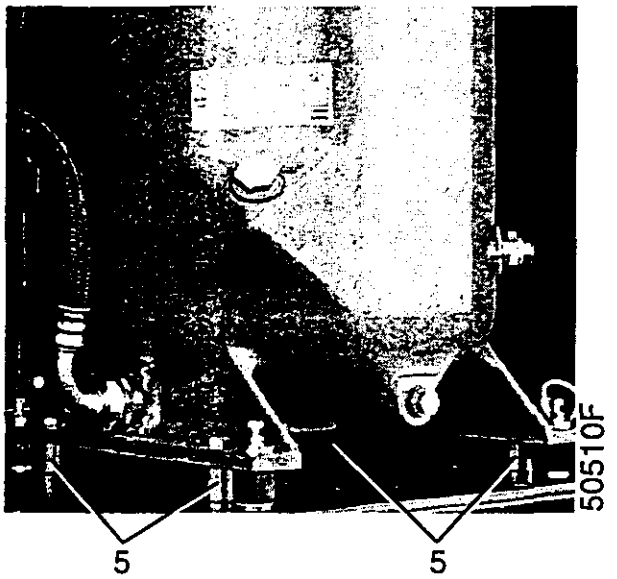

Fig. 3.3 Air receiver

1 Vibration damper
2 Bush, to be removed
3 Support, to be removed
4 Bolt
5 Bush, to be removed

Figs. 3.2 and 3.3 Transport fixations

6. Connect the automatic condensate drain outlet (Daa-Fig. 1.5) to the drain collector.
7. On water-cooled compressors, drain valves should be fitted by the customer in the water inlet and outlet pipes. Also provide and open the water inlet and regulating valve. Consult section 2.6 for the water requirements.
8. Check the oil level. The pointer of the level gauge (Gl-Fig. 3.5) should register in the green or orange range. The bottle with Atlas Copco Roto-injectfluid (4-Fig. 3.1) can be used for topping up. Check section 3.2 for lubrication of the compressor element.
9. Labels are delivered with the compressor, warning the operator that:
   - the compressor automatically restarts after voltage failure (see section 1.3.1)
   - the compressor is automatically controlled and may be restarted, even after manually stopping (see section 1.3.1)

   Stick these labels on an obvious place near the control panel. **Read these warnings (as well as the warnings mentioned in section 1.3.1) and take them into account.**
10. Switch on the voltage. Start the compressor and stop it immediately. Check the rotation direction of the motors. First check the drive motor (M1-Fig. 1.3). The correct rotation direction is indicated by an arrow (2-Fig. 1.3) provided on the gear casing (rotation direction depends on compressor type). If the rotation direction is wrong, switch off the voltage and reverse two incoming electric lines. Then check fan motor (M2-Fig. 1.3) on air-cooled compressors. Rotation arrows, visible through the grating in the roof, are provided on the plate below the fan. If necessary, switch off the voltage and reverse two incoming electric connections at the terminals of circuit breaker (Q15-Fig. 1.7).
11. Check the programmed settings. 1)
12. Start and run the compressor for a few minutes. Check that the compressor operates normally.

3.2 Before starting

If the compressor has not run for the past 6 months, it is strongly recommended to improve the lubrication of the compressor element at starting: Disconnect inlet pipe (2-Fig. 1.4), remove unloader (UA-Fig. 1.3) and pour 3/4 l of oil into the compressor element. Reinstall the unloader and reconnect the pipe. Make sure that all connections are tight.

1. Check the oil level (Gl-Fig. 3.5). The pointer should register in the green range or in the orange range.
2. If the red part of the air filter service indicator (VI-Fig. 3.6) shows full out, replace the air filter element (AF). Reset the service indicator by pushing the knob in the extremity of the body and reset the service warning 11).

On water-cooled compressors also:

3. Check that the cooling water drain valves (customer's installation) in the inlet and outlet pipes are closed.

HNF 7701
P&
REVO

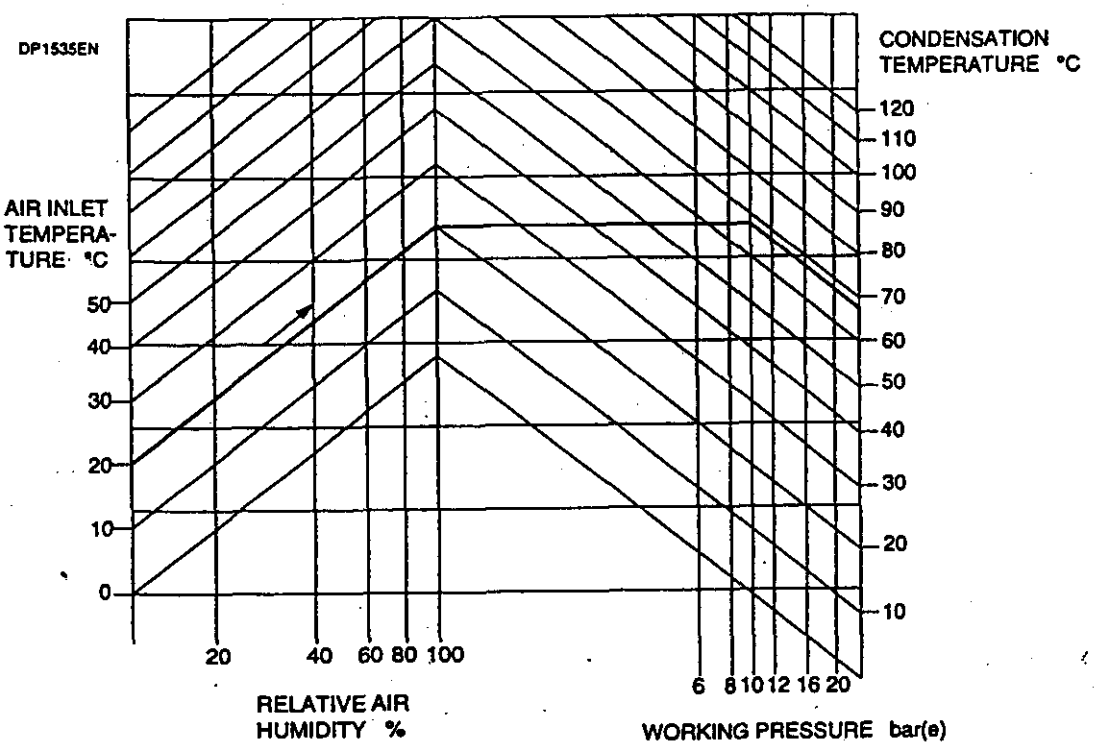

Example:
If operating at a pressure of 10 bar(e) in an ambient temperature of 20 degrees celsius and at a relative air humidity of 100 %, the minimum temperature to prevent condensate from forming is 68 degrees celsius. Regulate the cooling water flow during loaded operation to obtain a temperature between 70 and approx. 75 degrees celsius at the outlet of the compressor element.

Fig. 3.4 Minimum compressor element temperature for water-cooled units

4. Open the cooling water inlet valve (customer's installation).
5. Open the water flow regulating valve (customer's installation). This step can be overlooked if, after previous operation, the setting of this valve has not been disturbed.

3.3 Starting (Fig. 1.9)

Important

For GA Full-feature, switch on the voltage 4 hours before starting to energize the crankcase heater of the refrigerant compressor.

1. Switch on the voltage. Check that voltage on LED (2) lights up. The message <<compressor off>> appears.
2. Open the air outlet valve (AV-Fig. 1.1).
3. Close the condensate drain valve (Dma-Fig. 1.5).
4. Press start button I (8). The compressor starts running and automatic operation LED (1) lights up. Ten seconds 3) after starting, the drive motor switches over from star to delta. At the same time 3) the compressor starts running loaded. The message on display (4) changes from <<Auto unloaded>> to <<Auto loaded>>.

On water-cooled compressors also:

5. If necessary, regulate the cooling water flow **during loaded running** to obtain the most suitable temperature at the outlet of the compressor element, i.e. between 2 and 7 degrees celsius above the relevant temperature in Fig. 3.4. For optimum operation, the cooling water outlet temperature 4) must never exceed the value specified in section 7.4. Consult Atlas Copco if condensate should be formed during frequent unloading periods.

3.4 During operation

1. Check the oil level **during loaded operation:** the pointer of the level gauge (Gl-Fig. 3.5) must register in the green range.
   If the level is in the LOW range, press button O (9-Fig. 1.9), wait until the compressor has stopped and switch ofl the voltage. Depressurize the oil system by unscrewing the oil filler plug (FC-Fig. 3.5) one turn, wait a few minutes and add oil until the level reaches the filler plug. Tighten the plug.

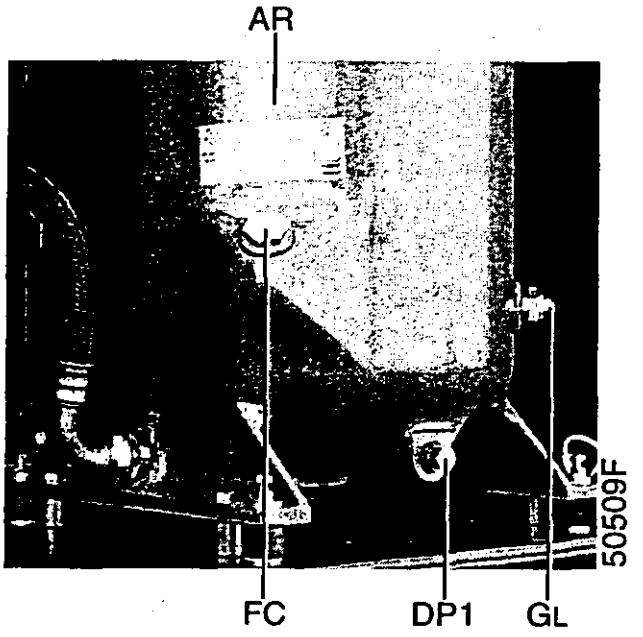

AR	Air receiver
DP1	Oil drain plug, air receiver
FC	Oil filler plug
Gl	Oil level gauge

Fig. 3.5 Air receiver

2. If the red part of the air filter service indicator (VI-Fig. 3.6) shows full out, stop the compressor, switch off the voltage and replace the air filter element (AF-Fig. 3.6). Reset the indicator by pushing its knob and reset the service warning 11).
3. If automatic operation LED (1-Fig. 1.9) is alight, the regulator is automatically controlling the compressor, i.e. loading, unloading, stopping of the motors and restarting.

3.4.1 Checking the display

1. Regularly check the display (4-Fig. 1.9) for readings and messages. Normally, the main display (Fig. 1.10) is shown, indicating the compressor outlet pressure, the status of the compressor and the abbreviations of the functions of the keys below the display.
2. Always check the display (4-Fig. 1.9) and remedy the trouble if alarm LED (3) is alight or blinks. Consult the User manual for Elektronikon regulator, section "Status data submenu".
. The display (4-Fig. 1.9) will show a service message if one of the monitored components is to be serviced; replace the component and reset the relevant timer. Consult the User manual for Elektronikon regulator, section "Service submenu".

Warning: Before carrying out any maintenance, repair or adjustment, stop the compressor, press emergency stop button (S3-Fig. 1.9), switch off the voltage and depressurize the compressor.

Notes
- Whenever a warning, service request, sensor error or motor overload message is displayed, the free spaces on the display between the function keys (5-Fig. 1.9) are filled with blinking indicators (**).
- When more than one message needs to be displayed (e.g. both warning and service), the messages will be displayed one after the other for 3 seconds.

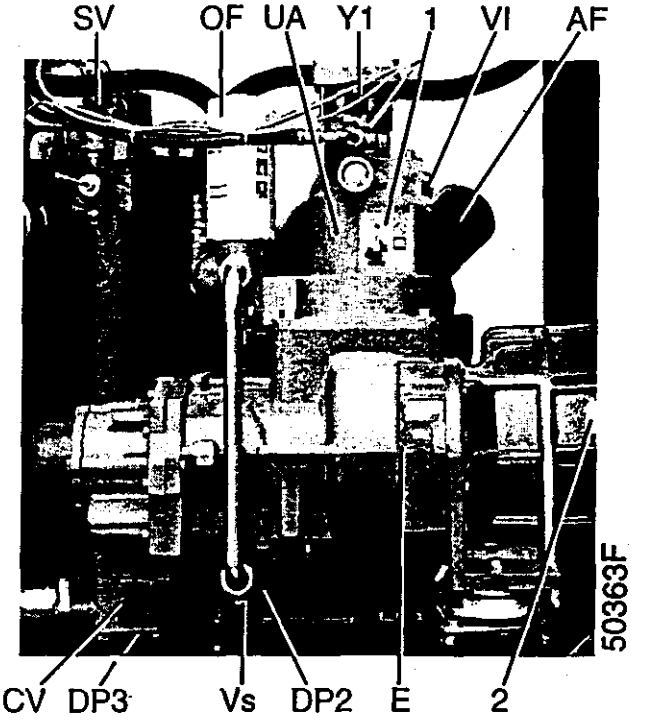

AF	Air filter
CV	Check valve
DP2	Oil drain plug, oil stop valve
DP3	Oil drain plug, check valve
E	Compressor element
OF	Oil filters
SV	Safety valve
UA	Unloader
VI	Service indicator, air filter
Vs	Oil stop valve
Y1	Loading solenoid valve
1	Warning: potential risk of sudden releasing of spring underneath cover of unloader during disassembling, have possible repair carried out by Atlas Copco
2	Arrow, motor rotation direction (depends on compressor type)

Fig. 3.6 View on receiver/compressor element

HNF 7701
P 28 REV 0

4. Regularly press the key <<More>> (5-Fig. 1.9) 6) to call up information about the actual compressor condition:
   - the status of controlling the compressor (automatic or manual, local or remote)
   - the status of the compressor start/stop timer (on or off) 5)
   - the maximum allowable unloading pressure
   - the outlet pressure
   - the pressure difference over the oil separator
   - the compressor element outlet temperature
   - the actual cooling water outlet temperature 7)
   - the status of the overload protection of both the drive motor and fan motor 8) (normal or not)
   - the total running and loading hours
   - the dewpoint temperature (on Full-feature compressors)

3.5 Manual control (Fig. 1.9) 9)

Normally, the compressor runs in automatic operation, i.e. the electronic regulator loads, unloads, stops and restarts the compressor automatically. LED (1) is then alight.

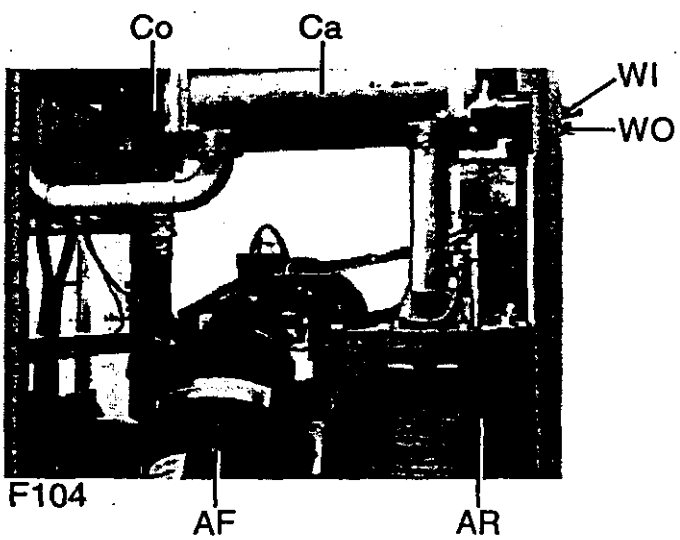

AF	Air filter
AR	Air receiver
Ca	Air cooler
Co	Oil cooler
WI	Water inlet
WO	Water outlet

Fig. 3.7 View on coolers (GA55/75 W)

If required, the compressor can be unloaded manually. In this case, the compressor is switched out of automatic operation, i.e. the compressor remains running unloaded unless it is loaded again manually.

Manually unloading
Press the key <<Unld>> (unload) (5). LED (1) goes out. The message <<Manual Unloaded>> appears on the display.

Manually loading
Press the key <<Load>> (5). LED (1) lights up. The command <<Load>> does not force the compressor in loaded condition, but it will switch the compressor to automatic operation again, i.e. the compressor will be loaded if the air net pressure drops below the programmed level.

Manually starting
In automatic operation, the regulator limits the number of motor starts. If the compressor is stopped manually, it must not be restarted manually within 6 minutes after the last stop.

3.6 Stopping

1. Press stop button O (9-Fig. 1.9). LED (1) goes out. The message <<Programmed stop>> appears. The compressor runs unloaded for 30 seconds and then stops.
2. **To stop the compressor in case of emergency**, press button (S3-Fig. 1.9). Alarm LED (3) blinks. After remedying the fault, unlock the button by pulling it out (on earlier production units by turning it to the left) and press key <<Rset>> (5) before restarting. The message <<All conditions are OK>> appears. Press keys <<Menu>> and <<Main>>.
3. Close air outlet valve (AV-Fig. 1.1) and switch off the voltage.
4. Open condensate drain valve (Dma-Fig. 1.5).

On water-cooled compressors only
5. Close the cooling water inlet valve.
6. **If freezing temperatures may be expected, drain the cooling system completely.**

3.7 Taking out of operation at end of compressor service life

At the end of the service life of the compressor, proceed as follows:

1. Stop the compressor and close the air outlet valve.
2. Switch off the voltage and disconnect the compressor from the mains.
3. Depressurize the compressor.

4. Shut off and depressurize the part of the air net which is connected to the outlet valve. Disconnect the compressor air outlet pipe from the air net.
5. Isolate and disconnect the water system from the cooling water net.
6. Drain the oil, water and condensate circuits.
7. Disconnect the condensate piping from the condensate net.

Footnotes chapter 3

1) Consult User manual for Elektronikon regulator, section "Programmable settings".
2) Air-cooled compressors only.
3) Programmable.
4) Consult User manual for Elektronikon regulator, section "Modifying protection settings".
5) The compressor is automatically started and stopped if these start/stop commands are programmed and activated; consult section 1.3.1.
6) If the function <<More>> is not indicated on the bottom line of display (4-Fig. 1.9), press key <<Menu>> (5) until function <<Main>> appears above key (F1), then press the key <<Main>>.
7) For water-cooled compressors.
8) For air-cooled compressors.
9) If the <<Load>> or <<Unld>> (unload) function is not indicated on the bottom line of display (4), press key <<Menu>> (5) until the function <<Main>> appears above key (F1), then press the key <<Main>>.
10) Optional.
11) Using key <<Rset>> in submenu <<Service>>: see User manual for Elektronikon regulator, section "Service submenu".

4 Maintenance

Attention
Before carrying out any maintenance or repair on the compressor, press stop button (9-Fig. 1.9), wait until the compressor has stopped (approx. 30 seconds), press emergency stop button (S3) and switch off the voltage. Close the air outlet valve and depressurize the air system. Apply all relevant safety precautions, including those mentioned in this book.

The air outlet valve can be locked during maintenance or repair as follows:
- Close the valve.
- Remove the bolt fixing the handle.
- Lift the handle and turn it until the slot of the handle fits over the blocking edge on the valve body.
- Lock the handle using the special bolt and wrench delivered loose with the compressor.

4.1 Drive motor (M1)

For SIEMENS motors, the bearings must be regreased every 4,000 operating hours preferably with grease ESSO UNIREX N3. Quantity: 40 g.

For ABB motors, the bearings must be regreased every 4,000 operating hours 3) with a high-temperature ball bearing grease ASONIC HQ 72-102. Quantity: 16 g per bearing. The lubrication points are marked. See section 4.6.

4.2 Preventive maintenance schedule for the compressor 1)

Attention
For overhauling or carrying out preventive maintenance, service kits are available. See section 4.6. Atlas Copco offers several types of Service contracts, relieving you of all preventive maintenance work. For more details, consult your nearest Atlas Copco representative.

The schedule comprises a summary of the maintenance instructions. **Read the respective section before taking maintenance measures. The "longer interval" checks must also include the "shorter interval" checks.** When servicing, replace all disengaged packings, e.g. gaskets, O-rings, washers.

HNF 7701
P30 REV0

Period 2)	Running hours 2)	See section	See notes below table	Operation
Daily				**Before starting**
"	—	3.2	-	Check oil level (Gl)
				During operation
"	—	3.4/7.1	-	Check readings on display
"	—	—	-	Check that condensate is discharged (Daa) during loading
"	—	3.4	-	Check oil level (Gl)
"	—	3.4	-	Check air filter service indicator (VI)
—	—	3.3	-	Regulate cooling water flow (water-cooled compressors)
				After stopping
—	—	3.6	-	Drain condensate (Dma)
3-monthly	—	5.3	3	Operate safety valve (SV)
"	**500**	5.2	-	Check coolers (Co/Ca) and condenser of dryer; clean if necessary
"	**500**	5.1	1	Remove air filter element (AF). Clean by air jet and inspect
"	—	—	-	Remove, dismantle and clean float valve of condensate trap (MTa)
"	—	—	10	Check for possible leakages
"	—	—	7	Carry out a LED/display test
Yearly	—	5.3	-	Have safety valve (SV) tested
"	—	—	8	Have the temperature shut-down function tested
"	—	—	-	Have the operation of the electrical interlockings, motor breakers, etc. tested by an electrician
"	**2000**	—	6	Check restrictors (Rf1, Rf2) for cleanness
"	**4000**	4.6/5.1	-	Replace air filter element (AF)
"	**4000**	4.3/4.4/4.6	4	If Atlas Copco Roto-injectfluid is used, change oil and oil filters
				For GA 7.5-8-10 bar and 100-125-150 psi
"	**1000**	4.3/4.4	2	If oil as specified in section 4.3.2 is used, change oil and oil filters
				For GA 13 bar and 175 psi
"	**500**	4.3/4.4	2	If oil as specified in section 4.3.2 is used, change oil and oil filters
"	—	—	9	Have all flexibles/flexible joints inspected
—	—	4.1	-	Re-grease bearings of drive motor as specified
2-yearly	**8000**	—	5	Have oil separator (OS) replaced

Notes

1. More frequently when operating in a dusty atmosphere. Replace damaged or heavily contaminated elements.
2. Use genuine Atlas Copco filters.
3. By unscrewing the cap one or two turns and retightening it or by pulling the valve lifting lever.
4. Recommended oil: Atlas Copco Roto-injectfluid. For the change interval in extreme conditions of temperature, humidity or cooling air, consult Atlas Copco.
5. Or when the pressure drop over the separator exceeds 1 bar. See section 3.4.1 to call up this value. Check the pressure drop when the compressor is running loaded and preferably with a stable working pressure.
6. One restrictor (Rf2-Fig. 1.6) is located in the oil scavenging line, the other (Rf1) upstream of oil stop valve (Vs).
7. Consult the User manual for Elektronikon regulator, section "Test submenu".
8. Consult the User Manual for the Elektronikon regulator before modifying the temperature protection settings, section "Modify settings submenu".

Decrease the shut-down warning level and shut-down level for the compressor element outlet temperature to the minimum settings. Run the compressor: when reaching the setting, the unit must shut down. Afterwards, reset the warning and shut-down levels to their original values.
Damaged flexibles or flexible joints must be replaced.
10. Any leakage should be attended to immediately.

4.3 Oil specifications

Attention
Never mix oils of different brands or types. Use only non-toxic oils.

4.3.1 Atlas Copco Roto-injectfluid

It is strongly recommended to use Atlas Copco Roto-injectfluid. This is special oil for screw compressors which keeps the compressor in excellent condition.

See also section 4.6.

4.3.2 Mineral oil

Although Roto-injectfluid is recommended, mineral oil can be used after taking following precautions:
- the previously used oil should first be drained and the system flushed
- the oil filters should be replaced
- the oil must meet the requirements as specified below

High-quality, mineral oil with oxidation inhibitors and anti-foam and anti-wear properties. The viscosity grade must correspond to the ambient temperature and ISO 3448, as follows:

Ambient temperature	Viscosity grade	Viscosity index
Consistently above 25 degrees celsius	ISO VG 68	Minimum 95
Between 25 and 0 degrees celsius	ISO VG 46	Minimum 95

4.4 Oil and oil filter change (Figs. 3.5 and 3.6)

1. Run the compressor unloaded for 3 minutes.
2. Stop the compressor. Switch off the voltage. Unscrew oil filler plug (FC) only one turn to permit any pressure in the system to escape.
3. Remove vent plug (VP-Fig. 1.3), wait 5 minutes, remove drain plug (DP2) and catch the oil in a receptacle.
4. Remove the oil filters (OF).
5. Clean the filter seats on the manifold. Oil the gaskets of the new elements. Screw the elements into place until the gaskets contact their seats, then tighten by hand (approx. half a turn).
6. Drain the oil by removing drain plugs (DP1 and DP3). Collect the oil in a collector and deliver it to the local oil collection service.
7. Reinstall plugs (DP1 up to DP3) and fill the air receiver with oil until the level reaches the filler plug opening. Reinstall plugs (FC and VP) and tighten.
8. Run the compressor for a few minutes. Stop the compressor and wait a few minutes to allow the oil to settle. Depressurize the system. Fill the air receiver with oil until the level reaches the filler plug opening. Tighten filler plug (FC).
9. Reset the oil and oil filter service warnings 4).

4.5 Storage after installation

Run the compressor twice a week until warm. Load and unload the compressor a few times. If the compressor is stored without running from time to time, protective measures must be taken. Consult Atlas Copco.

4.6 Service kits

Service kits are available offering the benefits of genuine Atlas Copco parts while keeping the maintenance budget low. The kits comprise all parts needed for servicing.

Service kit for oil filters and air filter	Ordering number
For GA55-GA55 W	2901 0416 00
For GA75-GA75 W-GA90C	2901 0431 00

HMF 7701
P32
REV0

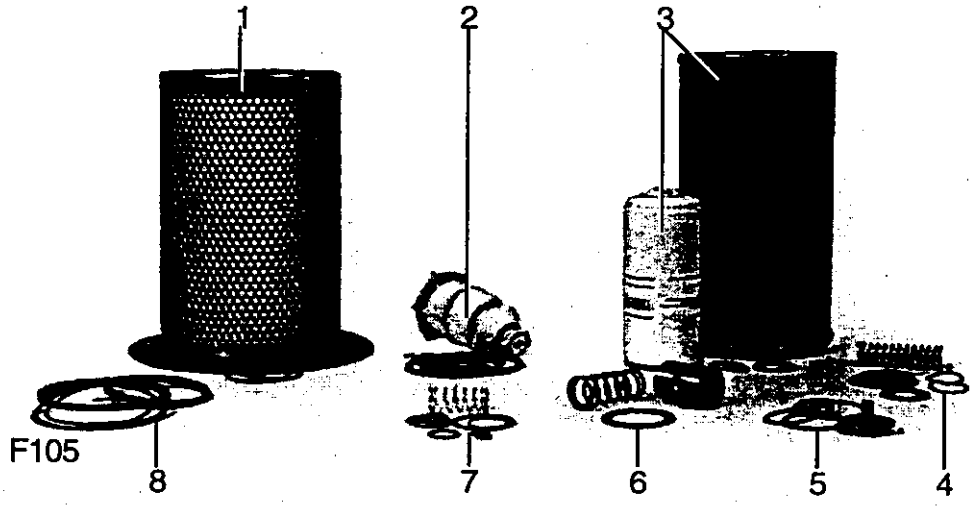

1	Oil separator kit	4	Minimum pressure valve kit	7	Oil stop valve kit
2	Condensate trap kit	5	Check valve kit	8	Unloading valve kit
3	Filter kit	6	By-pass valve kit		

Fig. 4.1 Preventive maintenance kits (typical examples)

Service kit for oil separator	Ordering number
For all GA	2901 0432 00

Roto-inject fluid

Atlas Copco Roto-injectfluid (see section 4.3.1) can be ordered in following quantities:

Quantity	Ordering number
20-litre can	2901 0522 00
209-litre drum	2901 0045 01

Motor grease

For ABB motors, the ordering number for a motor grease cartridge is 2901 0338 01 (see section 4.1).

Footnotes chapter 4

1) Use only authorized parts. Any damage or malfunction by the use of unauthorized parts is not covered by Warranty or Product Liability.
2) Whichever interval comes first. The local Atlas Copco Sales Company may overrule this schedule depending on the working conditions of the compressor.
3) Every 3,400 operating hours for GA75 60 Hz.
4) Using key <<Rset>> in submenu <<Service>>: see User manual for Elektronikon regulator, section "Service submenu".

5 Adjustments and servicing procedures

5.1 Air filter (AF-Fig. 1.4)

1. Stop the compressor. Switch off the voltage. Release the snap clips and remove the dust trap and air filter element. Clean the trap. Discard the filter element.
2. Refit the new element and the trap.
3. Reset the service indicator (VI-Fig. 3.6) by pushing the knob in the extremity of the body.
4. Reset the air filter service warning 1).

5.2 Coolers

Keep the coolers clean to maintain the cooling efficiency.

On air-cooled compressors
Remove any dirt from the coolers with a fibre brush. Never use a wire brush or metal objects. Then clean by air jet in reverse direction of normal flow while covering all compressor parts under the coolers. If it is necessary to wash the coolers with a cleansing agent, consult Atlas Copco.

On water-cooled compressors
Consult Atlas Copco for cleaning.

5.3 Safety valve (SV-Fig. 3.6)

Operate the safety valve, depending on the type of valve:
- by unscrewing the cap one or two turns and retightening it
- or by pulling the valve lifting lever

Testing
The valve can be tested on a separate compressed air line. If the valve does not open at the pressure specified in section 7.2, consult Atlas Copco.

Warning: *No adjustments are allowed. Never run the compressor without safety valve.*

Footnotes chapter 5

1) Using key <<Rset>> in submenu <<Service>>: see User manual for Elektronikon regulator, section "Service submenu".

6 Problem solving

Consult the User manual for Elektronikon regulator (section "Status data submenu") if a service message or fault message appears on the display (4-Fig. 1.9) or when alarm LED (3-Fig. 1.9) is alight or blinks.

Before starting repairs:
Press stop button (9-Fig. 1.9), wait until the compressor has stopped (approx. 30 seconds), press stop button (S3-Fig. 1.9) and switch off the voltage.
Close the air outlet valve and depressurize the air system. Furthermore, apply all relevant safety precautions, including those mentioned in this book.
The air outlet valve can be locked as described in section 4.

Mechanical faults and suggested remedies (Fig. 1.6)

1 Push button I is pressed, compressor starts running, but does not load after a delay time.
a Solenoid valve (Y1) out of order.
a Replace valve.
b Inlet valve (IV) stuck in closed position.
b Have valve checked.
c Leak in control air flexibles.
c Replace leaking flexible.
d Minimum pressure valve (Vp) leaking (when net is depressurized).
d Have valve checked.

2 Compressor does not unload, safety valve blows.
a Solenoid valve (Y1) out of order.
a See 1a.
b Inlet valve (IV) does not close.
b See 1b.

3 Condensate is not discharged from condensate trap during loading.
a Discharge flexible clogged.
a Check and correct as necessary.
b Float valve malfunctioning.
b Remove float valve assembly, clean and check.

4 Compressor air output or pressure below normal.
a Air consumption exceeds air output of compressor.
a Check equipment connected.
b Choked air inlet filter element (AF).
b Replace filter element.
c Solenoid valve (Y1) malfunctioning.
c See 1a.
d Leak in control air flexibles.
d See 1c.
e Inlet valve (IV) does not fully open.
e See 1b.
f Oil separator element (OS) clogged.
f Have element replaced.
g Air leakage.
g See 1c.

h Safety valve (SV) leaking.
h Have valve replaced.
i Compressor element (E) out of order.
i Consult Atlas Copco.

5 Excessive oil flow through air inlet filter after stopping.
a Check valve (CV) leaking or oil stop valve (Vs) jammed.
a Have defective parts replaced. Replace air filter element (AF).

6 Safety valve (SV) blows after loading.
a Inlet valve (IV) malfunctioning.
a See 1b.
b Minimum pressure valve (Vp) malfunctioning.
b See 1d.
c Oil separator element (OS) clogged.
c See 4f.
d Safety valve (SV) out of order.
d See 4h.
e Dryer piping clogged because of ice formation.
e Have refrigerant system checked by Atlas Copco.

7 Element outlet 1) or air outlet temperature above normal.
a Insufficient cooling air or cooling air temperature too high.
a Check for cooling air restriction or improve ventilation of compressor room. Avoid recirculation of cooling air. If installed, check capacity of compressor room fan. On water-cooled compressors, check cooling water flow; if necessary, have system cleaned.
b Oil level too low.
b Check and correct as necessary.
c Oil cooler (Co) clogged.
c Clean cooler.
d By-pass valve (BV) malfunctioning.
d Have valve tested.
e Air cooler (Ca) clogged.
e Clean cooler.
f Compressor element (E) out of order.
f See 4i.

Footnotes chapter 6

1) A warning message will appear on display (4-Fig. 1.9).

HMF 7701
P34
REVO

7 Principal data

7.1 Readings on display (4-Fig. 1.9) 8)

Ref. **Air outlet pressure**
Reading: Modulates between programmed unloading and loading pressures
Shown: On main display (Fig. 1.10)
Sensor: PT20-Fig. 1.6

Ref. **Compressor element outlet temperature**
Reading: Approx. 60 degrees celsius above cooling air temperature or above cooling water inlet temperature
Shown: When using the key <<More>> (5-Fig. 1.9) 9)
Sensor: TT11-Fig. 1.6

Ref. **Pressure difference over oil separator**
Reading: Below 1 bar
Shown: When using the key <<More>> (5-Fig. 1.9) 9)
Sensor: PDT1-Fig. 1.6

Ref. **Cooling water outlet temperature**
Reading: Below 50 degrees celsius
Shown: When using the key <<More>> (5-Fig. 1.9) 9)
Sensor: TT51

7.2 Settings of safety valve

Compressor type	Safety valve set pressure(e)
GA 7.5-8 bar	12 bar(e)
GA 10 bar	12 bar(e)
GA 13 bar	14.5 bar(e)
GA 100 psi	200 psig
GA 125 psi	200 psig
GA 150 psi	200 psig
GA 175 psi	215 psig
GA 7.5-8 bar/ISPESL approved	11 bar(e)
GA 10 bar/ISPESL approved	11 bar(e)
GA 13 bar/ISPESL approved	14 bar(e)

Always check the set pressure stamped on the valve.

7.3 Maximum settings of overload relay, circuit breaker and fuses

7.3.1 For GA55/GA55 W

Supply voltage (V)	Frequency	Circuit breaker Q15 11) (A)	Overload relay F21 (A)	Fuses (A)
230	50 Hz - IEC	8.3	124	250
400	50 Hz - IEC	4.8	71	160
500	50 Hz - IEC	3.8	57	125
220-230	60 Hz - IEC	8.3	123	250
220-230	60 Hz - CSA/UL	8.3	123	250
380	60 Hz - IEC	4.8	71	160
380	60 Hz - CSA/UL	4.8	71	150
440-460	60 Hz - IEC	4.6	61	125
440-460	60 Hz - CSA/UL	4.6	61	125
575	60 Hz - IEC	3.7	47	100
575	60 Hz - CSA/UL	3.7	47	100

7.3.2 For GA75/GA75 W

Supply voltage (V)	Frequency	Circuit breaker Q15 11) (A)	Overload relay F21 (A)	Fuses (A)
230	50 Hz - IEC	8.3	160	315
400	50 Hz - IEC	4.8	92	200
500	50 Hz - IEC	3.8	74	160
220-230	60 Hz - IEC	8.3	165	355
220-230	60 Hz - CSA/UL	8.3	165	350
380	60 Hz - IEC	4.8	95	200
380	60 Hz - CSA/UL	4.8	95	200
440-460	60 Hz - IEC	4.6	82	200
440-460	60 Hz - CSA/UL	4.6	82	175
575	60 Hz - IEC	3.7	63	160
575	60 Hz - CSA/UL	3.7	63	150

7.3.3 For GA90C

Supply voltage (V)	Frequency	Circuit breaker Q15 (A)	Overload relay F21 (A)	Fuses (A)
230	50 Hz - IEC	12.5	184	355
400	50 Hz - IEC	7.3	106	250
500	50 Hz - IEC	5.8	85	200
220-230	60 Hz - IEC	14	190	400
220-230	60 Hz - CSA/UL	14	190	400
380	60 Hz - IEC	7.6	112	250

ITNF 7701
P36 REV0

Supply voltage (V)	Frequency	Circuit breaker Q15 (A)	Overload relay F21 (A)	Fuses (A)
440-460	60 Hz - IEC	6.9	95	200
440-460	60 Hz - CSA/UL	6.9	95	200
575	60 Hz - IEC	5.5	76	160
575	60 Hz - CSA/UL	5.5	76	160

7.4 Settings of dryer switches (on GA Full-feature)

Fan control switch (PSR90)
- Cut-out pressure ..... bar(e) 16.9
- Switch-on pressure ..... bar(e) 18

Shut-down switch (PSHH90) ..... bar(e) 29

7.5 Compressor specifications

7.5.1 Reference conditions

Air inlet pressure (absolute) ..... bar 1
Air inlet temperature ..... celsius 20
Relative humidity ..... % 0
Working pressure ..... bar(e) See nominal values below

On water-cooled units also:
Cooling water inlet temperature ..... celsius 20

7.5.2 Limitations

Maximum working pressure ..... bar(e) See maximum values below
Minimum working pressure ..... bar(e) 4
Maximum air inlet temperature ..... celsius 40
Minimum air inlet temperature ..... celsius 0

On water-cooled units also:
Max. cooling water outlet temperature ..... celsius 50
Max. cooling water inlet pressure ..... bar(e) 5

7.5.3 GA55/GA55 W Pack 1) 7)

Compressor type		7.5 bar	8 bar	10 bar	13 bar	100 psi	125 psi	150 psi	175 psi
Frequency	Hz	50	50	50	50	60	60	60	60
Maximum (unloading) pressure	bar(e)	7.5	8	10	13	7.4	9.1	10.8	12.5
Nominal working pressure	bar(e)	7	8	9.5	12.5	6.9	8.6	10.3	12
Temperature of air leaving outlet valve, approx.	celsius	30	30	30	30	30	30	30	30
Drive motor, ABB type M2AA SMD 10)		225	225	225	225	225	225	225	225
Drive motor, SIEMENS type 1LA6 10)		228-2	228-2	228-2	228-2	228-2	228-2	228-2	228-2
Motor shaft speed	r/min	2975	2975	2975	2975	3575	3575	3575	3575
Power input, GA	kW	61.2	65.5	66.6	66.1	66.4	66.9	65.2	65.8
Power input, GA W	kW	58.7	62.9	64.1	63.6	63.6	64.1	62.4	62.9
Oil capacity, GA	l	29.5	29.5	29.5	29.5	29.5	29.5	29.5	29.5
Oil capacity, GA W	l	26	26	26	26	26	26	26	26
Mean sound pressure level 2)	dB(A)	67	67	67	67	67	67	67	67
Cooling water consumption, GA W 3)	l/min	50	54	54	54	54	54	54	54
Cooling water consumption, GA W 4)	l/min	75	77	81	81	81	81	81	81

7.5.4 GA55/GA55 W Full-feature 1) 7)

Compressor type		7.5 bar	8 bar	10 bar	13 bar	100 psi	125 psi	150 psi	175 psi
Frequency	Hz	50	50	50	50	60	60	60	60
Maximum (unloading) pressure	bar(e)	7.25	7.75	9.75	12.75	7.15	8.85	10.55	12.25
Nominal working pressure	bar(e)	7	7.75	9.5	12.5	6.9	8.6	10.3	12
Temperature of air leaving outlet valve, approx.	celsius	25	25	25	25	25	25	25	25
Drive motor, ABB type M2AA SMD 10)		225	225	225	225	225	225	225	225
Drive motor, SIEMENS type 1LA6 10)		228-2	228-2	228-2	228-2	228-2	228-2	228-2	228-2
Motor shaft speed	r/min	2975	2975	2975	2975	3575	3575	3575	3575
Power input, GA	kW	64.8	68.0	70.1	69.2	70.9	70.4	69.5	69.8
Power input, GA W	kW	62.3	65.5	67.6	66.6	68.0	67.6	66.7	67.0
Oil capacity, GA	l	29.5	29.5	29.5	29.5	29.5	29.5	29.5	29.5
Oil capacity, GA W	l	26	26	26	26	26	26	26	26
Mean sound pressure level 2)	dB(A)	67	67	67	67	67	67	67	67
Cooling water consumption, GA W 3)	l/min	50	54	54	54	54	54	54	54
Cooling water consumption, GA W 4)	l/min	75	77	81	81	81	81	81	81
efrigerant type		R404a	R404a	R404a	R404a	R404a	R404a	R404a	R404a
Refrigerant charge	kg	6	6	6	6	6	6	6	6
Pressure dewpoint, Full-feature 5)	celsius	3	3	3	3	3	3	3	3

ITNF 7701
P35
REVO

7.5.5 GA75/GA75 W Pack 1) 7)

Compressor type		7.5 bar	8 bar	10 bar	13 bar	100 psi	125 psi	150 psi	175 psi
Frequency	Hz	50	50	50	50	60	60	60	60
Maximum (unloading) pressure	bar(e)	7.5	8	10	13	7.4	9.1	10.8	12.5
Nominal working pressure	bar(e)	7	8	9.5	12.5	6.9	8.6	10.3	12
Temperature of air leaving outlet valve, approx.	celsius	30	30	30	30	30	30	30	30
Drive motor, ABB type M2A SMC 10)		250	250	250	250	250	250	250	250
Drive motor, SIEMENS type 1LA6 10)		258-2	258-2	258-2	258-2	258-2	258-2	258-2	258-2
Motor shaft speed	r/min	2975	2975	2975	2975	3575	3575	3575	3575
Power input, GA	kW	87.7	82.2	89.6	89.1	89.8	90.1	89.3	88.6
Power input, GA W	kW	85.7	79.6	87.0	86.6	87.0	87.3	86.5	85.7
Oil capacity, GA	l	29.5	29.5	29.5	29.5	29.5	29.5	29.5	29.5
Oil capacity, GA W	l	26	26	26	26	26	26	26	26
Mean sound pressure level 2)	dB(A)	70	69	69	69	69	69	69	69
Cooling water consumption, GA W 3)	l/min	74	68	74	74	74	74	74	74
Cooling water consumption, GA W 4)	l/min	110	98	110	110	110	110	110	110

7.5.6 GA75/GA75 W Full-feature 1) 7)

Compressor type		7.5 bar	8 bar	10 bar	13 bar	100 psi	125 psi	150 psi	175 psi
Frequency	Hz	50	50	50	50	60	60	60	60
Maximum (unloading) pressure	bar(e)	7.25	7.75	9.75	12.75	7.15	8.85	10.55	12.25
Nominal working pressure	bar(e)	7	7.75	9.5	12.5	6.9	8.6	10.3	12
Temperature of air leaving outlet valve, approx.	celsius	25	25	25	25	25	25	25	25
Drive motor, ABB type M2A SMC 10)		250	250	250	250	250	250	250	250
Drive motor, SIEMENS type 1LA6 10)		258-2	258-2	258-2	258-2	258-2	258-2	258-2	258-2
Motor shaft speed	r/min	2975	2975	2975	2975	3575	3575	3575	3575
Power input, GA	kW	93.4	85.9	94.4	93.1	95.9	95.1	95.0	93.8
Power input, GA W	kW	91.4	83.4	91.8	90.6	93.1	92.2	92.1	91.0
Oil capacity, GA	l	29.5	29.5	29.5	29.5	29.5	29.5	29.5	29.5
Oil capacity, GA W	l	26	26	26	26	26	26	26	26
Mean sound pressure level 2)	dB(A)	70	69	69	69	69	69	69	69
Cooling water consumption, GA W 3)	l/min	74	68	74	74	74	74	74	74
Cooling water consumption, GA W 4)	l/min	110	98	110	110	110	110	110	110
Refrigerant type		R404a	R404a	R404a	R404a	R404a	R404a	R404a	R404a
Refrigerant charge	kg	6	6	6	6	6	6	6	6
Pressure dewpoint, Full-feature 5)	celsius	4	4	4	4	4	4	4	4

HXF 7701
P39
R40

7.5.7 GA90C Pack 1)

Compressor type		7.5 bar	10 bar	13 bar	100 psi	125 psi	150 psi	175 psi
Frequency	Hz	50	50	50	60	60	60	60
Maximum (unloading) pressure	bar(e)	7.5	10	13	7.4	9.1	10.8	12.5
Nominal working pressure	bar(e)	7	9.5	12.5	6.9	8.6	10.3	12
Temperature of air leaving outlet valve, approx.	celsius	30	30	30	30	30	30	30
Drive motor		ABB M2AA 250	ABB M2AA 250	ABB M2AA 250	SIEMENS 1LA6 250	SIEMENS 1LA6 250	SIEMENS 1LA6 250	SIEMENS 1LA6 250
Motor shaft speed	r/min	2970	2970	2970	3575	3575	3575	3575
Power input, GA	kW	98.7	100.3	100.4	100.1	102.1	101.8	101.2
Oil capacity, GA	l	29.5	29.5	29.5	29.5	29.5	29.5	29.5
Mean sound pressure level 2)	dB(A)	74	74	74	76	76	76	76

7.5.8 GA90C Full-feature 1)

Compressor type		7.5 bar	10 bar	13 bar	100 psi	125 psi	150 psi	175 psi
Frequency	Hz	50	50	50	60	60	60	60
Maximum (unloading) pressure	bar(e)	7.25	9.75	12.75	7.15	8.85	10.55	12.25
Nominal working pressure	bar(e)	7	9.5	12.5	6.9	8.6	10.3	12
Temperature of air leaving outlet valve, approx.	celsius	25	25	25	25	25	25	25
Drive motor		ABB M2AA 250	ABB M2AA 250	ABB M2AA 250	SIEMENS 1LA6 250	SIEMENS 1LA6 250	SIEMENS 1LA6 250	SIEMENS 1LA6 250
Motor shaft speed	r/min	2970	2970	2970	3575	3575	3575	3575
Power input, GA	kW	104.2	105.7	105.7	106.8	108.7	108.3	107.8
Oil capacity, GA	l	29.5	29.5	29.5	29.5	29.5	29.5	29.5
Mean sound pressure level 2)	dB(A)	74	74	74	76	76	76	76
Refrigerant type		R404a	R404a	R404a	R404a	R404a	R404a	R404a
Refrigerant charge	kg	6.5	6.5	6.5	6.5	6.5	6.5	6.5
Pressure dewpoint, Full-feature 5)	celsius	4	4	4	4	4	4	4

7.6 Conversion list of SI units into US/British units

1 bar = 14.504 psi
1 g = 0.035 oz
1 kW = 1.341 hp (UK and US)
1 l = 0.264 US gal
1 l = 0.220 Imp gal (UK)
1 l = 0.035 cu.ft
1 l/s = 2.117 cfm
1 mm = 0.039 in
1 mbar = 0.401 in water column
1 N = 0.225 lbf
1 Nm = 0.738 lbf.ft
x degrees celsius = (32 + 1.8 x) degrees fahrenheit 6)

Footnotes chapter 7

1) At reference conditions.
2) According to PNEUROP PN8NTC2.2. With a tolerance of 2 dB.
3) At water inlet temperature below 25 degrees celsius and temperature rise = 15 degrees celsius.
4) At water inlet temperature between 25 and 40 degrees celsius and temperature rise = 10 degrees celsius.
5) At 20 degrees celsius / 100% relative humidity.
6) A temperature difference of 1 degree celsius = a temperature difference of 1.8 degrees fahrenheit.
7) An 8 bar version is available as option.
8) See User manual for Elektronikon regulator, sections "Main display" and "More function".
9) See also section 3.4.1.
10) For later production 60 Hz CSA/UL versions, a SIEMENS drive motor is provided.
11) On air-cooled compressors only.

Notes:

HNF 7701
p42
REV 0

Notes:

Notes:

1+MF 7701
PH4
REV 0

SAFETY PRECAUTIONS (continued)

the unit to contain air above atmospheric pressure shall be protected by a pressure-relieving device or devices as required.

13. Pipework or other parts with a temperature in excess of 80 degrees celsius and which may be accidentally touched by personnel in normal operation shall be guarded or insulated. Other high-temperature pipework shall be clearly marked.
14. If the ground is not level or can be subject to variable inclination, consult Atlas Copco.
15. The electrical connections shall correspond to the local codes. The units shall be grounded and protected against short circuits by fuses.

Operation

1. Air hoses shall be of correct size and suitable for the working pressure. Never use frayed, damaged or deteriorated hoses. Use only the correct type and size of hose end fittings and connections. When blowing through a hose or air line, ensure that the open end is held securely. A free end will whip and may cause injury. Make sure that a hose is fully depressurized before disconnecting it.

   Never play with compressed air. Do not apply it to your skin or direct an air stream at people. Never use it to clean dirt from your clothes. When using it to clean equipment, do so with extreme caution and use eye protection.
2. The compressor is not considered as capable of producing air of breathing quality. For breathing air quality, the compressed air must be adequately purified according to local legislation and standards.
3. Never operate the unit when there is a possibility of taking in flammable or toxic fumes.
4. Never operate the unit at pressures below or in excess of its limit ratings as indicated on the Principal Data sheet.
5. Keep all bodywork doors shut during operation. The doors may be opened for short periods only, e.g. to carry out checks. Wear ear protectors when opening a door.
6. People staying in environments or rooms where the sound pressure level reaches or exceeds 90 dB(A) shall wear ear protectors.
7. Periodically check that:
   a. All guards are in place and securely fastened
   b. All hoses and/or pipes inside the unit are in good condition, secure and not rubbing
   c. There are no leaks
   d. All fasteners are tight
   e. All electrical leads are secure and in good order
   f. Safety valves and other pressure-relief devices are not obstructed by dirt or paint
   g. Air outlet valve and air net, i.e. pipes, couplings, manifolds, valves, hoses, etc. are in good repair, free of wear or abuse
8. If warm cooling air from compressors is used in air heating systems, e.g. to warm up a workroom, take precautions against air pollution and possible contamination of the breathing air.
9. Do not remove any of, or tamper with, the sound-damping material.

Maintenance

Maintenance and repair work shall only be carried out under supervision of someone qualified for the job.

1. Use only the correct tools for maintenance and repair work.
2. Use only genuine spare parts.
3. All maintenance work, other than routine attention, shall only be undertaken when the unit is stopped, the main power supply is switched off and the machine has cooled down. Take positive precaution to ensure that the unit cannot be started inadvertently.
4. Before removing any pressurized component, effectively isolate the unit from all sources of pressure and relieve the entire system of pressure.
5. Never use flammable solvents or carbon tetrachloride for cleaning parts. Take safety precautions against toxic vapours of cleaning liquids.
6. Scrupulously observe cleanliness during maintenance and repair. Keep dirt away by covering the parts and exposed openings with a clean cloth, paper or tape.
7. Never weld or perform any operation involving heat near the oil system. Oil tanks must be completely purged, e.g. by steam-cleaning, before carrying out such operations.

   Never weld on, or in any way modify, pressure vessels.

   Whenever there is an indication or any suspicion that an internal part of a machine is overheated, the machine shall be stopped but no **inspection covers shall be opened** before sufficient cooling time has elapsed; this to avoid the risk of spontaneous ignition of the oil vapour when air is admitted.

   Never use a light source with open flame for inspecting the interior of a machine, pressure vessel, etc.
8. Make sure that no tools, loose parts or rags are left in or on the unit.
9. Before clearing the unit for use after maintenance or overhaul, check that operating pressures, temperatures and time settings are correct and that the control and shut-down devices function correctly. If removed, check that the coupling guard of the compressor drive shaft has been reinstalled.
10. Every time the separator element is renewed, examine the discharge pipe and the inside of the oil separator vessel for carbon deposits; if excessive, the deposits should be removed.
11. Protect the motor, air filter, electrical and regulating components, etc. to prevent moisture from entering them, e.g. when steam-cleaning.
12. Make sure that all sound-damping material, e.g. on the bodywork and in the air inlet and outlet systems of the compressor, is in good condition. If damaged, replace it by genuine Atlas Copco material to prevent the sound pressure level from increasing.
13. Never use caustic solvents which can damage materials of the air net, e.g. polycarbonate bowls.
14. The following safety precautions are stressed when handling refrigerant:
    a. Never inhale refrigerant vapours. Check that the working area is adequately ventilated; if required, use breathing protection.
    b. Always wear special gloves. In case of refrigerant contact with the skin, rinse the skin with water. If liquid refrigerant contacts the skin through clothing, **never tear off or remove** the latter; flush abundantly with fresh water over the clothing until all refrigerant is flushed away; then seek medical first aid.
    c. Always wear safety glasses.
15. Protect hands to avoid injury from hot machine parts, e.g. during draining of oil.

Note: With stationary machine units driven by an internal combustion engine, allowance has to be made for extra safety precautions, e.g. spark arrestors, fuelling care, etc. Consult Atlas Copco.

All responsibility for any damage or injury resulting from neglecting these precautions, or by non-observance of ordinary caution and due care required in handling, operating, maintenance

HNF 7701
P45
REV0

INTENTIONALLY
BLANK

HNF 7701

P46
REVO

The face of innovatio

What sets Atlas Copco apart as a company is our conviction that we can only excel in what we do if we provide the best possible know-how and technology to really help our customers produce, grow and succeed.

There is a unique way of achieving that - we simply call it the Atlas Copco way. It builds on interaction, on long-term relationships and involvement in the customers' process, needs and objectives. It means having the flexibility to adapt to the diverse demands of the people we cater for.

It's the commitment to our customers' business that drives our effort towards increasing their productivity through better solutions. It starts with fully supporting existing products and continuously doing things better, but it goes much further, creating advances in technology through innovation. Not for the sake of technology, but for the sake of our customer's bottom line and peace-of-mind.

That is how Atlas Copco will strive to remain the first choice, to succeed in attracting new business and to maintain our position as the industry leader.

2920 1381 01 / DC 99.04

P47
REVO

Atlas Copco Oil-water Separators

OSD22 for GA11 up to GA22
OSD90 for GA30 up to GA90 VSD

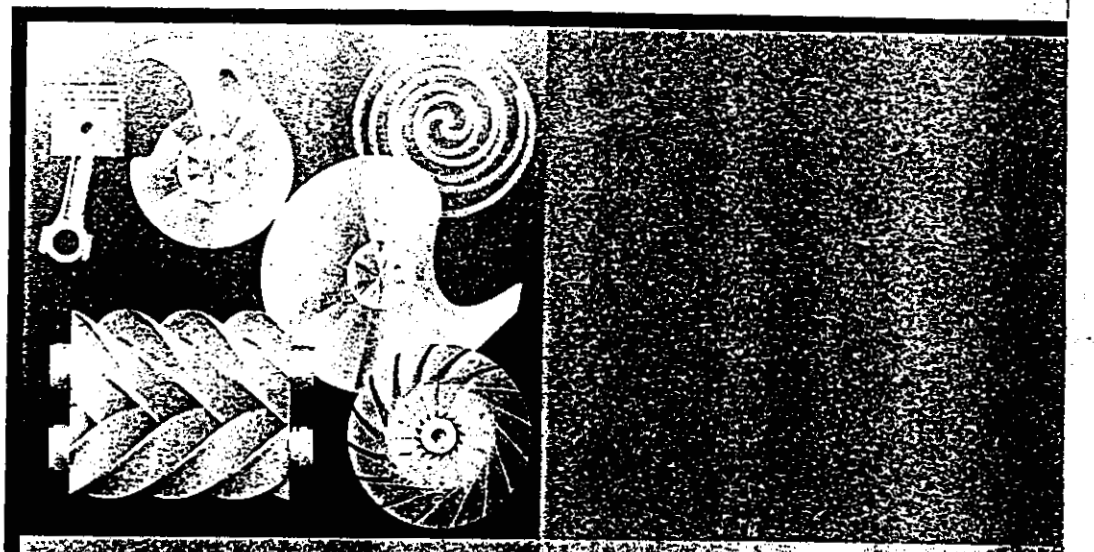

HNF 7701
p48
REV0

INTENTIONALLY

BLANK

Manuscript

ANP 1101
P49
REV 0

Quality Control
Wilrijk - Belgium

1 DECLARATION BY THE MANUFACTURER

5009 9046 00

2 This product must not be put into service until the machine in which it is intended to be incorporated into or assembled with, is in conformity with the relevant Essential Health and Safety requirements of the EC directive 98/37/EC on the approximation of the laws of the member states relating to machinery.

3 We , Atlas Copco Airpower n.v., declare under our sole responsibility , that the product

4 Product name : **OIL WATER SEPARATOR**

5 Product type : **OSD 90**

6 Serial number : **From AII 400 500**

7 which falls under the provisions of article 8.2.a of the EC - Directive 98/37/EC,

is in conformity with the relevant Essential Health and Safety Requirements of the above Council Directive on the approximation of the laws of the Member States relating to Machinery.

8 Division Industrial Air

9	Conformity of the specification to the directive	10 Conformity of the product to the specification
11 Issuers	12 Product Engineering	13 Manufacturing
14 Name	Lee Ann Harvey	Hans Thibau
15 Signature	Lee A. Harvey	
16 Date	280700	

HNF 7701
p 56
REN O

NL 1.VERKLARING VAN DE FABRIKANT 2.Dit produkt mag niet in werking worden gesteld zolang de machine waarin het zal ingebouwd of gemonteerd worden niet in overeenstemming is met de betreffende Vereisten Inzake Gezondheid en Veiligheid van Richtlijn 98/37/EEG van de EG aangaande de onderlinge overeenstemming van de wetgeving van de Lidstaten betreffende Machines 3.Wij, Atlas Copco Airpower, verklaren onder onze exclusieve verantwoordelijkheid dat het produkt 4.Naam van produkt 5.Type van produkt 6.Serienummer 7.das onder de voorzieningen valt van artikel 8.2.a van Richtlijn 98/37/EEC van de EG, in overeenstemming is met de betreffende Vereisten inzake Gezondheid en Veiligheid van bovengenoemde Richtlijn van de Raad aangaande de onderlinge overeenstemming van de wetgeving van de Lidstaten betreffende Machines. 8.Divisie 9.Overeenstemming van de specifikatie met de richtlijn 10.Overeenstemming van het produkt met de specifikatie 11.Uitgevers 12.Produktontwerp 13.Kwaliteitsdienst Produktie 14.Naam 15Handtekening 16.Datum

DE 1.KONFORMITÄTSERKLÄRUNG DES HERSTELLERS 2.Diese Maschine darf erst inbetriebgenommen werden, wenn für die Maschine, in die sie eingebaut oder mit der sie zusammengebaut werden soll, eine Konformitätserklärung gemäß den Gesundheits- und Sicherheitsbestimmungen der Direktive 98/37/EWG des EG Rates über die Angleichung der Rechtsvorschriften der EG Mitgliedsstaaten im Hinblick auf Maschinen, ergestellt wurde 3.Wir, Atlas Copco Airpower, erklären hiermit in alleiniger Verantwortung, daß das Produkt 4.Maschinenname 5.Maschinentyp 6.Seriennummer 7.das fällt unter den Bestimmungen von Artikel 8.2.a der EG-Direktive 98/37/EWG, den Gesundheits- und Sicherheitsanforderungen der obengenannten Direktive des EG Rates über die Angleichung der Rechtsvorschriften der EG Mitgliedsstaaten im Hinblick auf Maschinen, entspricht. 8.Abteilung 9.Konformität der Spezifikation mit der Direktive 10.Konformität des Produktes mit der Spezifikation 11.Ersteller 12.Fertigungstechnik 13.Herstellungsqualität 14.Name 15.Unterschrift 16.Datum

FR 1.DÉCLARATION DU CONSTRUCTEUR 2.Ce produit ne doit pas être mis en service sauf si la machine dans laquelle il doit être incorporé ou assemblé est en conformité avec les directives capitales sur les exigences de santé et sécurité des directives sur la machinerie 98/37/CEE concernant le rapprochement des législations des états membres relatives aux machines. 3.Nous, Atlas Copco Airpower, déclarons sous notre responsabilité exclusive que ce produit 4.Désignation 5.Type de produit 6.Numéro de série 7.qui rentre dans les clauses de l'article 8.2.a des Directives CE 98/37/CEE, est en conformité avec les directives capitales sur les exigences de santé et sécurité de la directive du conseil précitée concernant le rapprochement des législations des états membres relatives aux machines. 8.Division 9.Conformité de la spécification selon la directive 10.Conformité du produit selon la spécification 11.Emetteurs 12.Produit industriel 13.Qualité de fabrication 14.Nom 15.Signature 16.Date

IT 1.DICHIARAZIONE DEL FABBRICANTE 2.Questo prodotto non deve essere messo in servizio finchè la macchina nella quale è destinato ad essere incorporato o con la quale è destinato ad essere assemblato, non sia conforme ai requisiti essenziali ai fini della sicurezza e della tutela della salute, della Direttiva 98/37/CEE concernente il riavvicinamento delle legislazioni degli stati membri relative alle macchine 3.Noi, Atlas Copco Airpower, dichiariamo sotto la nostra unica responsabilità che il prodotto 4.Nome della prodotto 5.Tipo di prodotto 6.Numero di serie 7.che rientra nelle disposizioni dell'articolo 8.2.a della Direttiva 98/37/CEE della Comunità Europea, e conforme ai Requisiti Essenziali ai fini della Sicurezza e della tutela della salute, della citata Direttiva del Consiglio concernente il riavvicinamento delle legislazioni degli stati membri relative alle macchine. 8.Divisione 9.Conformità della specifica alla direttiva 10.Conformità del prodotto alla specifica 11.Rilasciata da 12.Engineering del Prodotto 12.Qualità della Fabbricazione 14.Nome 15.Firma 16.Data

PT 1.DECLARAÇÃO PELO FABRICANTE 2.Este produto não deve posto ao serviço enquanto a máquina na qual vai ser incorporado ou com a qual vai ser instalado não estiver em conformidade com os Requisitos Essenciais de Higiene e Segurança relevantes da Directiva da CE 98/37/EEC sobre a aproximação das leis dos Estados Membros relacionadas com Maquinaria 3.Nós, Atlas Copco Airpower, declaramos, sob nossa responsabilidade exclusiva, que o produto 4.Nome da produto 5.Tipo da produto 6.Número de série 7.abrangido pelas disposições do artigo 8.2.a da Directiva da CE 98/37/CEE, se encontra em conformidade com os Requisitos Essenciais de Higiene e Segurança da referida Directiva do Conselho supracitadas sobre a aproximação das leis dos Estados Membros relacionadas com Maquinaria. 8.Divisão 9.Conformidade da especificação com a directiva 10.Conformidade do produto com a especificação 11.Entidade emissora 12.Engenharia de Produtos 13.Qualidade de Fabrico 14.Nome 15.Assinatura 16.Data

GR 1.ΔΗΛΩΣΗ ΤΟΥ ΚΑΤΑΣΚΕΥΑΣΤΗ 2.Το προι_ν αυτ_ δεν πρ_πει να τεθε_ σε λειτουργ_α μ_χρις _του το μηχ_νημα στο οπο_ο πρ_κειται να συναρμολογηθε_ _ να ενσωματωθε_ ε_ναι σε πλ_ρη συμμ_ρφωση με τις βασικ_ς απαιτ_σεις περ_ Υγιειν_ς και Ασφ_λειας της οδηγ_ας της EC 98/37/ΕΟΚ περ_ προσ_γισης των ν_μων των Κρατ_ν Μελ_ν των αναφερομ_νων σε μηχαν_ματα. 3.Η Atlas Copco Airpower, δηλ_νουμε υπκ_θυνα _τι το προι_ν 4.Ονομα προι_ντος 5.Τ_πος προι_ντος 6.Αριθμ_ς σειρ_ς 7.το οπο_ο υπ_κειται στις διατ_ξεις του _ρθρου 8.2.α της οδηγ_ας 98/37/ΕΟΚ, ε_ναι σε πλ_ρη συμμ_ρφωση με τις σχετικ_ς βασικ_ς διατ_ξεις περ_ Υγιειν_ς και Ασφ_λειας της προαναφερθε_σας οδηγ_ας για την προσ_γιση των ν_μων των Κρατ_ν Μελ_ν των αναφερομ_νων σε μηχαν_ματα. 8.Τνημα 9.Συμμ_ρφωση ως προς τις προδιαγραφ_ς της Οδηγ_ας 10.Συμμ_ρφωση του προι_ντος ως προς τις/ προδιαγραφ_ς 11.Εκδ_τες 12.Σχεδιασμ_ς προι_ντος 13.Ποι_τητα κατασκευ_ς 14.Ονομα 15.Υπογραφ_ 16.Ημερομην_α

DK 1.PRODUCENTERKLÆRING 2.Dette produkt må ikke tages i brug for det maskineri, det er bestemt for at inkorporeres i eller samles med, er erklæret i overensstemmelse med Væsentlige Sikkerheds- og Sundhedskrav i EF-Direktivet 98/37/EØF vedr. tilnærmelse mellem medlemslandenes love for maskiner 3.Vi, Atlas Copco Airpower, erklærer under eget ansvar,at produktet 4.Produkt navn 5.Produkt type 6.Serienummer 7.som relaterer til bestemmelserne i artikel 8.2.a i EF-Direktivet 98/37/EØF, er i overensstemmelse med relevante Væsentlige Sikkerheds- og Sundhedskrav i ovennævnte Direktiv fra Rådet vedr. tilnærmelse mellem medlemslandenes love for maskiner. 8.Division 9.Specifikationens overensstemmelse med direktivet 10.Produktets overensstemmelse med specifikationen 11.Udstedere 12.Produktkonstruktion 13.Fabrikationskvalitet 14.Navn 15.Underskrift 16.Dato

ES 1.DECLARACIÓN DEL FABRICANTE 2.Se prohibe poner el presente producto en servicio hasta que la máquina en que será incorporado o montado sea conforme a los Requisitos Esenciales de Salud y Seguridad de la Directiva de la CE 98/37/CEE sobre la concordancia de las leyes de los Estados Miembros con relación a la Maquinaria. 3.Nosotros, Atlas Copco Airpower, declaramos bajo nuestra sola responsabilidad que el producto 4.Designación del producto 5.Tipo del producto 6.Número de serie 7.como se prevé en las disposiciones del artículo 8.2.a de la Directiva de la CE 98/37/EEC, es conforme a los Requisitos Esenciales de Salud y Seguridad de dicha Directiva del Consejo sobre la concordancia de las leyes de los Estados Miembros con relación a la Maquinaria. 8.División 9.Conformidad de la especificación a la directiva 10.Conformidad del producto a la especificación 11.Emisores 12.Ingeniería de Producto 13.Calidad de Manufactura 14.Nombre 15.Firma 16.Fecha

SE 1.DEKLARATION AV TILLVERKAREN 2.Denna produkt skall inte tas i drift tills den maskin i vilken den skall inbyggas i eller monteras på, överensstämmer med Väsentliga Hälsovårds- och Säkerhetskraven i EG-Directiv 98/37/EEG om harmonisering av Medlemsstaternas lagar rörande maskiner. 3.Vi, Atlas Copco Airpower, förklarar på vårt fulla ansvar att produkten 4.Produktens namn 5.Produktenstyp 6.Serienummer 7.som är föremål för bestämmelserna i artikel 8.2.a av EG-direktiv 98/37/EEC, överensstämmer med "Väsentliga Hälsovårds- och Säkerhetskraven" i Ministerrådets ovannämnda direktiv om harmonisering av Medlemsstaternas lagar rörande maskiner. 8.Avdelning 9.Överensstämmelse av specifikationen med direktivet 10.Överensstämmelse av produkten med specifikationen 11.Utfärdare 12.Produktteknik 13.Tillverkningskvalitet 14.Namn 15.Namnteckning 16.Datum

FI 1.VALMISTAJAN EU-VAATIMUSTENMUSKAISUUSVAKUUTUS 2.Tätä tuotetta ei saa ottaa käytöön ennen kuin kone, johon se asennetaan rakenteelliseksi osaksi tai johon se liitetään, täytää direktiivin 98/37/ETY asiaankuuluvat terveys-ja turvallisuusvaatimukset ja kansalliset säädökset. 3. Me, Atlas Copco Airpower, vakuutamme että tuote 4.Tuotteen nimi 5.Tuotteen tyyppi 6.Valmistusnumero 7.joka kuuluu EU:n direktiivin 98/37/ETY artiklan 8.2.a piirin, täytää yllämainitun direktiivin asianmukaiset terveys-ja turvallisuusvaatimukset ja vastaavat kansalliset koneita koskevat säädökset. 8.Yksikkö 9.Direktiivin määräysten mukaisuus 10.Koneen spesifikaationmukaisuus 11.Vastaava 12.Tuotteen suunnittelu 13.Valmistuksen laatu 14.Niml 15.Allekirjoitus 16.Päiväys

NO 1.PRODUSENTERKLÆRING 2.Dette produktet må ikke settes i drift for maskinen den skal være en del av eller samkjores med, er i overensstemmelse med gjelende helse- og sikkehetsbestemmelser i EU-Direktiv 98/37/EEC, tilpasset lovene for maskinelt utstyr i medlemslandene. 3.Vi, Atlas Copco Airpower, erklærer som vårt fulle ansvar at nedenstående produkt 4.Maskinens navn 5.Maskintype 6.Serienummer 7.som kommer under bestemmelsene i artikkel 8.2.a i EU-direktiv 98/37/ECC, er i samsvar med gjeldende helse- og sikkehetsbestemmelser i ovennevnte direktiv, tilpasset lovene for maskinelt utstyr i medlemslandene. 8.Divisjon 9.Spesifikasjonen er i overensstem-melse med direktivet 10.Maskinen er i overensstemmelse med spesifikasjonen 11.Utgiver 12.Produktutvikling 13.Fabrikasjonskvalitet 14.Navn 15.Signatur 16.Dato

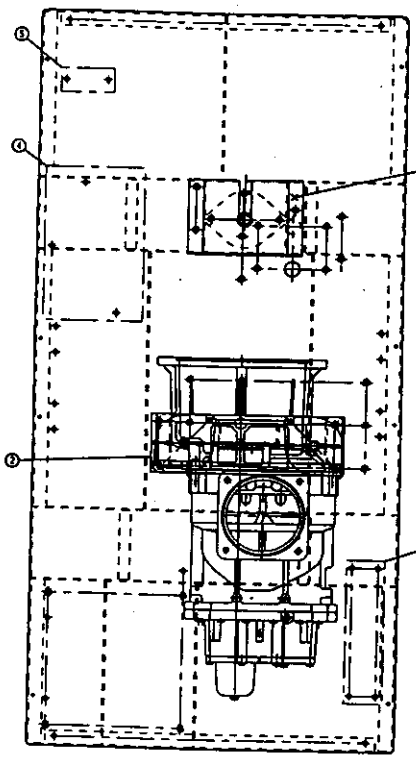

GA 55-75 10-13 bar (50Hz) other pressures (60Hz)
Gearbox drive
Element size 1.5 short

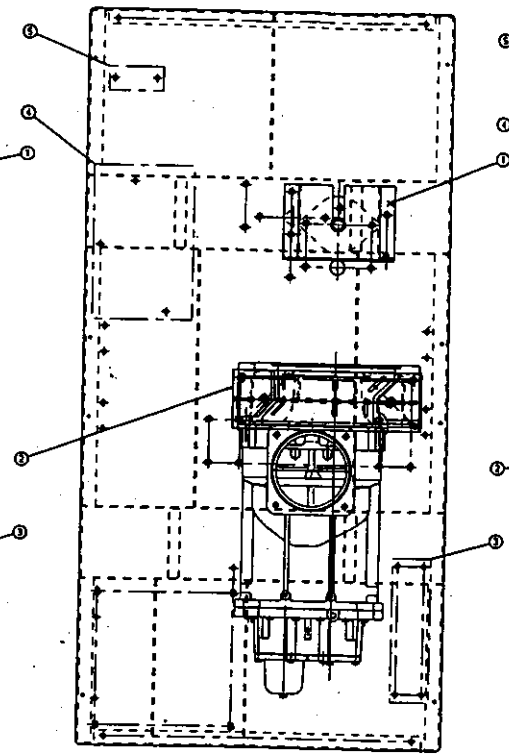

GA 75 7 bar (direct drive)
Direct drive
Element size 1.5 long

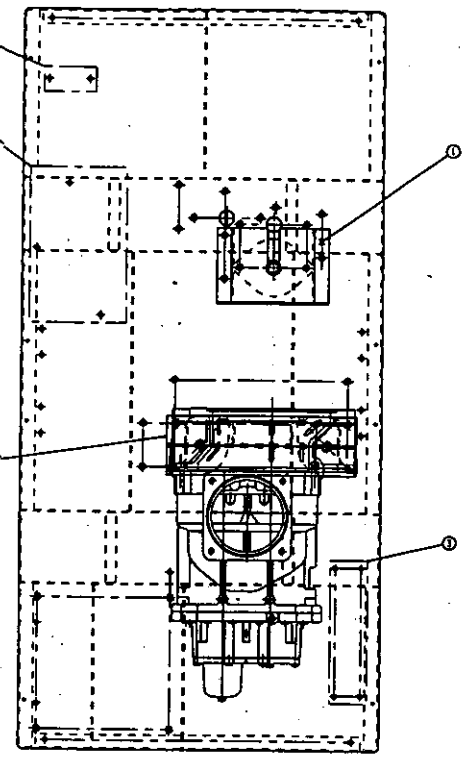

GA 55 7 bar (direct drive)
Direct drive
Element size 1.5 short

1. [illegible]
2. [illegible]
3. POS. ENERGY RECOVERY (OPTIONAL)
4. POS. [illegible] (OPTIONAL)
5. POS. [illegible] (OPTIONAL)

APPROVED 9820 2692 00

HNF 7701
P51
R200

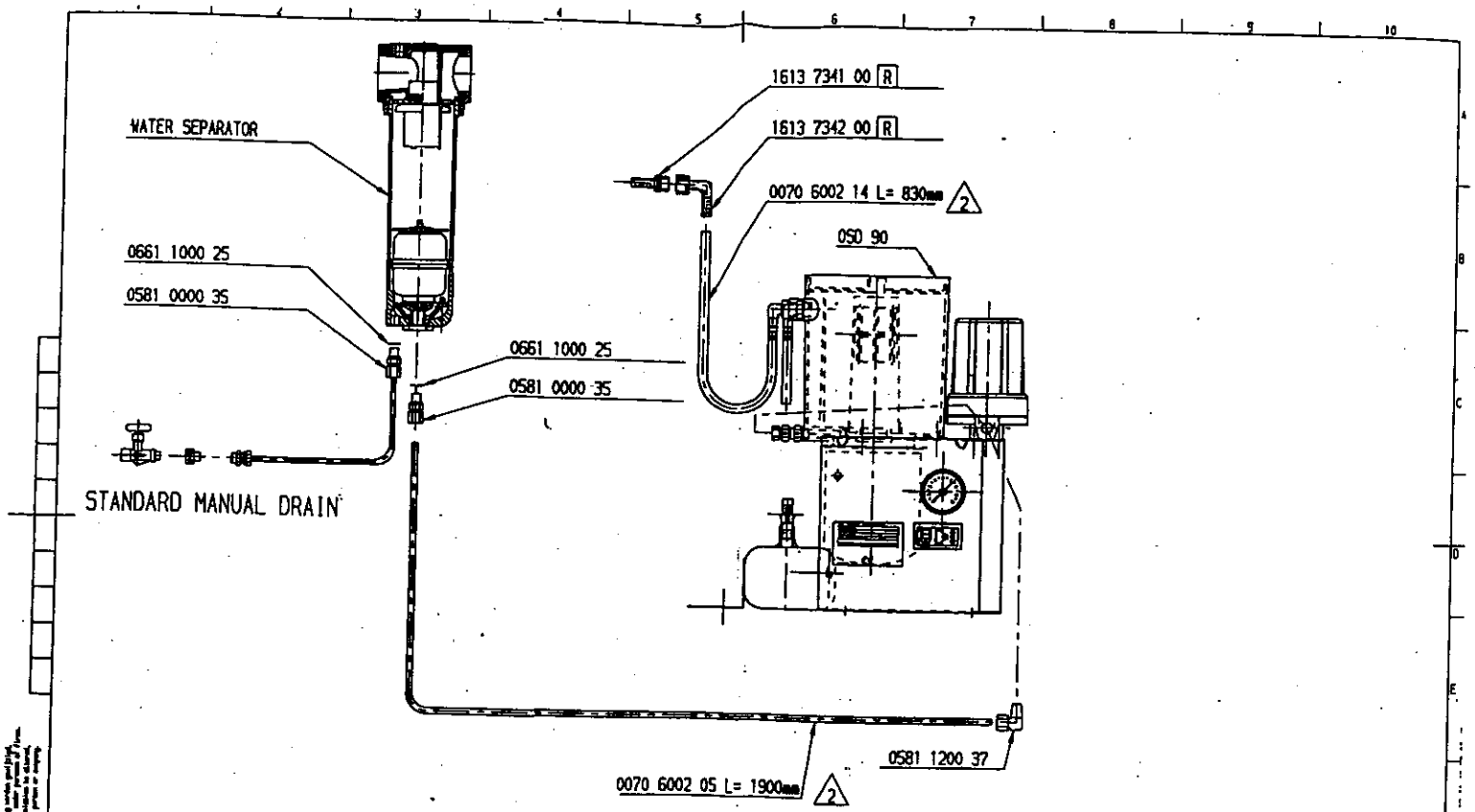

ATLAS COPCO STANDARD/Classe/Class		1350K / 2	1350:01K	1355K / C	1356K / B
Benaming / Name	PIPING DIAGRAM			12020	Geheim, Klasse / Secrecy Class
Materiaal / Material	OSD				1102 K/ 3
Behandeling / Treatment					CAD
Atlas Copco	Schaal / Scale 1:5	Familie / Family	A3	Vergelijk / Compare	Eigenaar / Drawing owner AIP
	Getekend / Drawn by STECAS	Raw nr. / Blank nr.		Vervangt / Replaces	
	Sol gez./Chd.	Ruw gew. / Blank wt. kg	Afg gew. / Finit. wt. kg	Identificatie/Designation	Blad/Sheet 01 (1)
	Ges. APPROVED		Datum/Date 96-09-18	9820 2490 02	

Rev. Rev.	Positie / Position	Omschrijving / Description	Datum / Date	Ingev./Goedg. / Intr./Appr.
02	.	Length 830 and 1900 added	98-08-18	

Bijhorende tekeningen en documenten / Appurtenant drawings and documents

HAF 7701
P52
REV0

HAF 7701
p 53
REV 0

OWNERSHIP DATA

Unit type: .....
Motor type: .....
Delivery date: .....
Service Plan: .....

Owner's machine No.: .....
Unit serial No.: .....
Motor serial No.: .....
First start-up date: .....

Selected lubricants
Compressor: .....
Bearing grease type, electric motor: .....

Capacity: .....

Printed Matter Nos.
Atlas Copco instruction book: .....
Atlas Copco parts list: .....
Atlas Copco logbook: .....

Motor instruction book: .....
Motor parts list: .....

Local Atlas Copco Representative
Name: .....
Address: .....
Telephone: ..... Contact persons: Service: .....
Telex: ..... Parts: .....

SAFETY PRECAUTIONS

To be read attentively and acted accordingly before installing, operating or repairing the unit

These recommendations apply to machinery processing or consuming air or inert gas. Processing of any other gas requires additional safety precautions typical to the application which are not included herein.

In addition to normal safety rules which should be observed with stationary air compressors and equipment, the following safety directions and precautions are of special importance.

When operating this unit, the operator must employ safe working practices and observe all related local work safety requirements and ordinances.

The owner is responsible for maintaining the unit in a safe operating condition. Parts and accessories shall be replaced if unsuitable for safe operation.

Installation, operation, maintenance and repair shall only be performed by authorized, trained, competent personnel.

Normal ratings (pressures, temperatures, time settings, etc.) shall be durably marked.

Any modification on the compressor shall only be performed in agreement with Atlas Copco and under supervision of authorized, competent personnel.

If any statement in this book, especially with regard to safety, does not comply with local legislation, the stricter of the two shall apply.

These precautions are general and cover several machine types and equipment; hence some statements may not apply to the unit(s) described in this book.

Installation

Apart from general engineering practice in conformity with the local safety regulations, the following directives are specially stressed:

1. A compressor shall be lifted only with adequate equipment in conformity with local safety rules.

   Loose or pivoting parts shall be securely fastened before lifting. It is strictly forbidden to dwell or stay in the risk zone under a lifted load. Lifting acceleration and retardation shall be kept within safe limits.

2. Any blanking flanges, plugs, caps and desiccant bags shall be removed before connecting up the pipes. Distribution pipes and connections shall be of correct size and suitable for the working pressure.

3. Place the unit where the ambient air is as cool and clean as possible. If necessary, install a suction duct. Never obstruct the air inlet. Care shall be taken to minimize the entry of moisture with the inlet air.

4. The aspirated air shall be free from flammable fumes or vapours, e.g. paint solvents, that can lead to internal fire or explosion.

5. Air-cooled units shall be installed in such a way that an adequate flow of cooling air is available and that the exhausted air does not recirculate to the inlet.

6. Arrange the air intake so that loose clothing of people cannot be sucked in.

7. Ensure that the discharge pipe from the compressor to the aftercooler or air net is free to expand under heat and that it is not in contact with or close to flammable material.

8. No external force may be exerted on the air outlet valve; the connected pipe must be free of strain.

9. If remote control is installed, the unit shall bear an obvious sign reading:

   DANGER: This machine is remotely controlled and may start without warning.

   As a further safeguard, persons switching on remotely controlled units shall take adequate precautions to ensure that there is no one checking or working on the machine. To this end, a suitably worded notice shall be affixed to the start equipment.

10. On units with automatic start-stop system, a sign stating **"This machine may start without warning"** shall be attached near the instrument panel.

11. In multiple compressor systems manual valves shall be installed to isolate each compressor. Non-return valves (check valves) shall not be relied upon for isolating pressure systems.

12. Never remove or tamper with the safety devices, guards or insulations fitted on the unit. Every pressure vessel or pipe line should be

HMF 7701
P 54
REV 0

Operating and installation instructions -
Parts list for

Oil separator kits
OSD22 for GA11 up to GA22
OSD90 for GA30 up to GA90 VSD

Registration code
Collection: APC G11-22
Tab: 38
Sequence: 0993

Collection: APC G30-45
Tab: 38
Sequence: 0978

Collection: APC G VSD
Tab: 38
Sequence: 0989

Replaces
No. 2920 1204 00

This instruction book meets the requirements for instructions specified by the machinery directive 89/392/EEC and is valid for CE as well as non-CE labelled machines

Atlas Copco Industrial Air Division - B-2610 Wilrijk - Belgium

No. 2920 1204 01

1995-07

2920120401

1 DESCRIPTION

Compressed air leaving oil-injected compressors contains oil. During cooling of this air, oil-containing condensate is formed. OSD are designed to separate the major part of this oil from the condensate and to catch the oil in a collector. The condensate meets the requirements of the environmental codes.

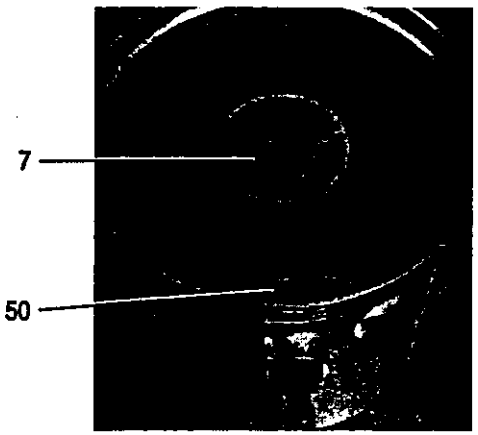

F1008

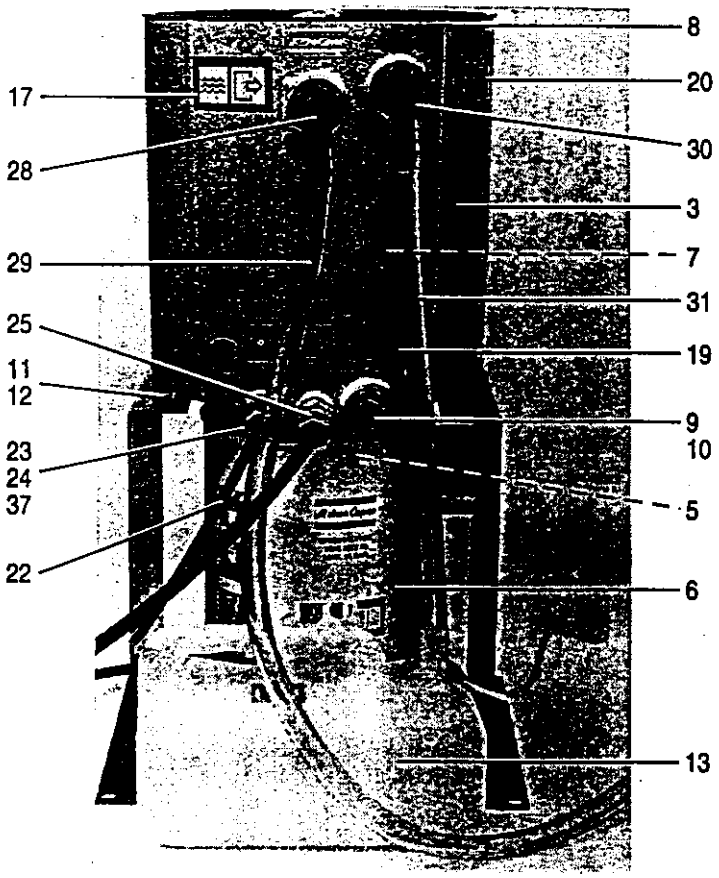

F1001

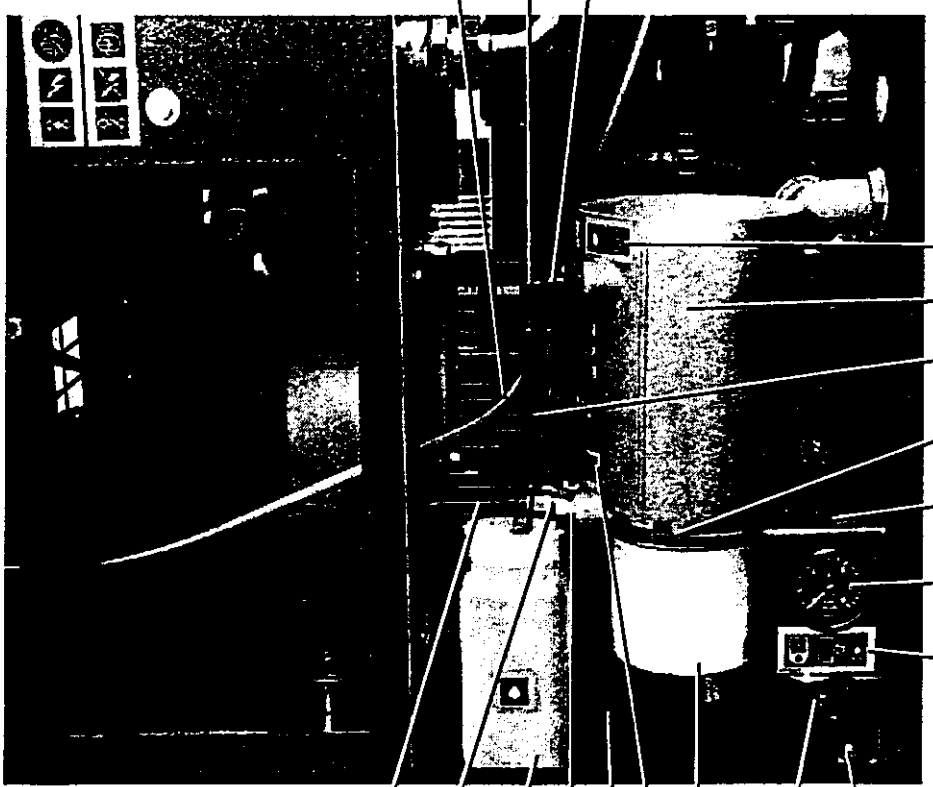

F1058

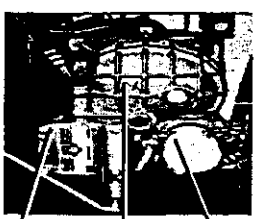

F1057

GA11/22

ITMF 7701
P 56
REV 0

2 OPERATION

Condensate containing fine oil droplets flows via strainer (25) through filter (6) in which the droplets coalesce in larger drops. This oil is led to water vessel (3) where the oil rises due to the difference in specific mass. The vessel is provided with two separated outlets:

- one for condensate (28), which is led outside the bodywork
- one for the separated oil (30), which is caught in collector (13)

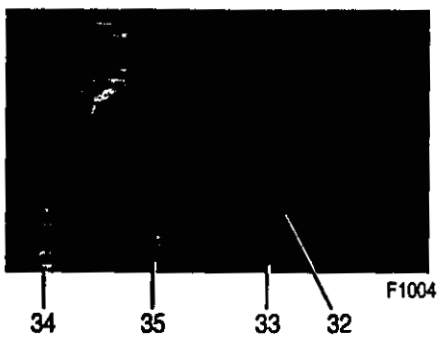

GA30/45

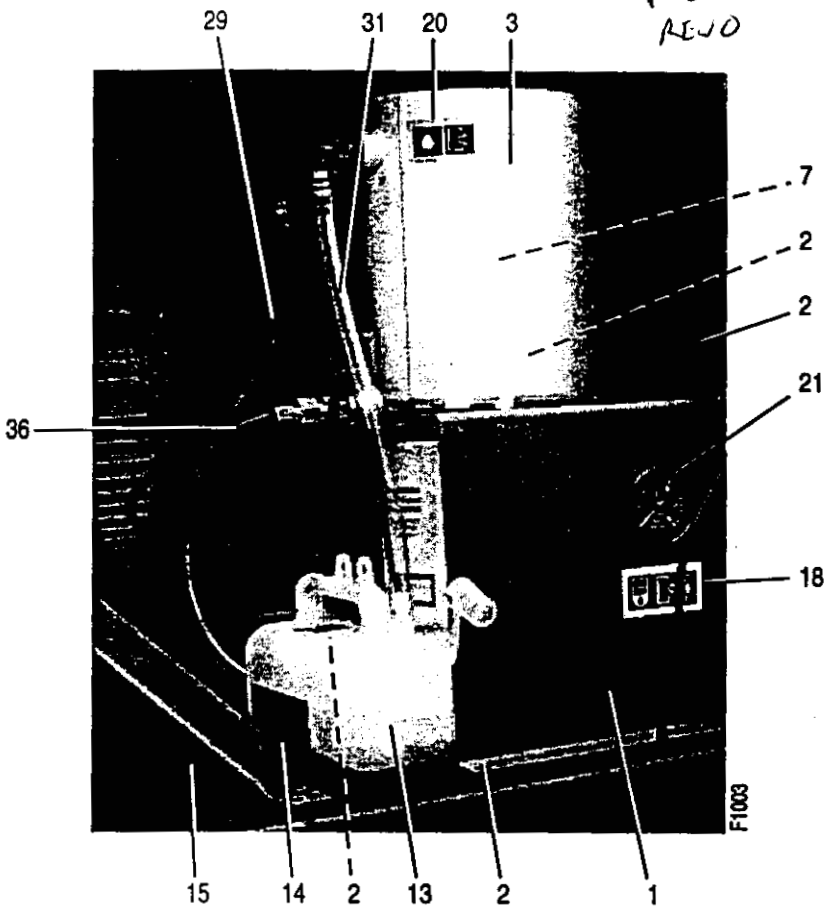

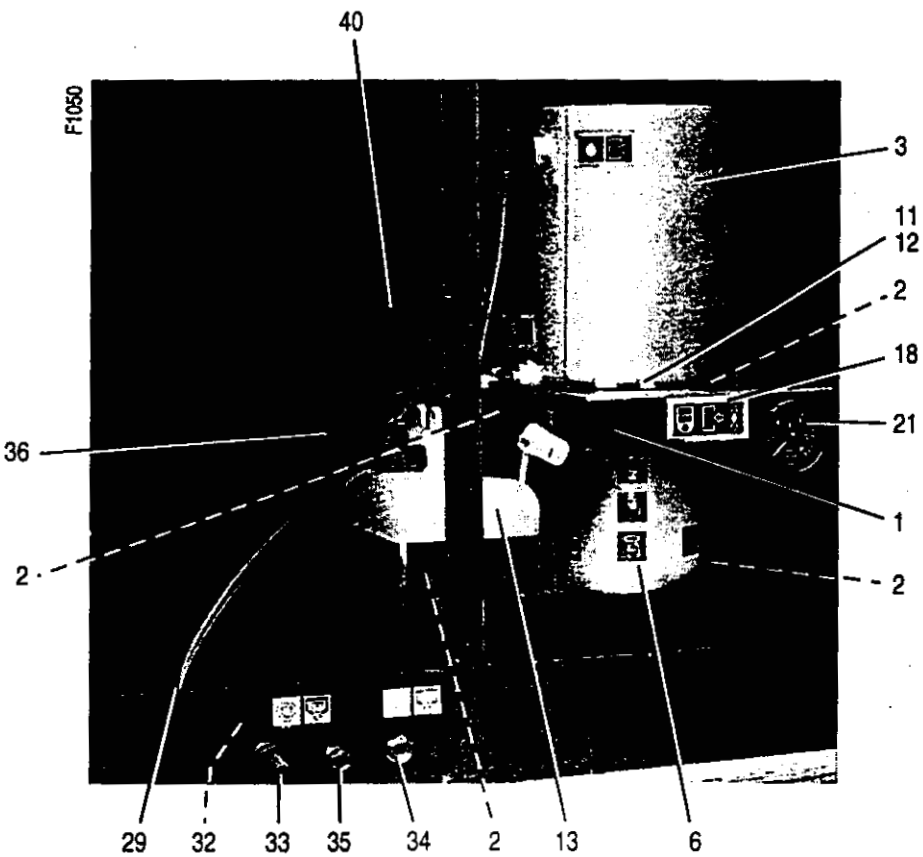

GA55/75

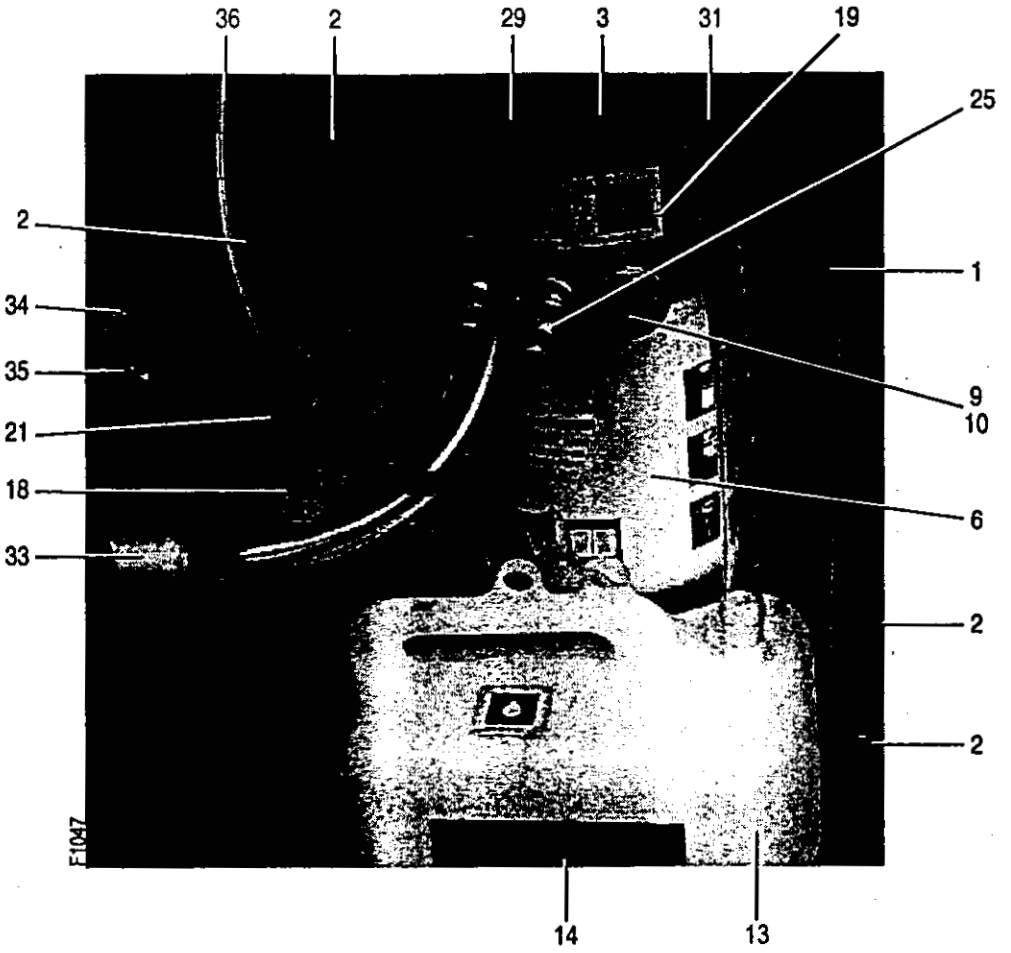

GA90 VSD

3 INSTALLATION

The bodywork of the compressors is provided with the necessary mounting holes (except for earlier production units; see below).

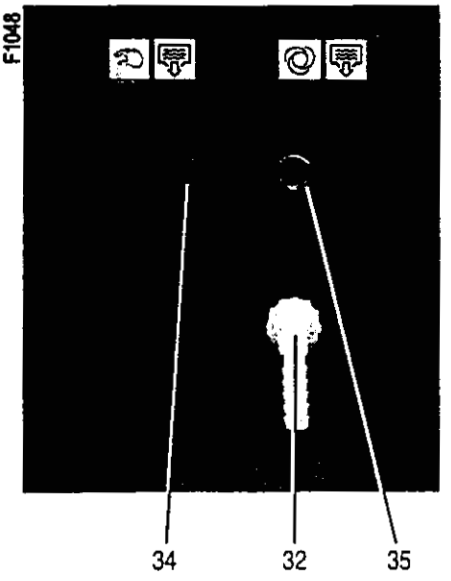

3.1 Installation

To fit the separator kits:

- Stop the compressor and close the air outlet valve. Switch off the voltage. Depressurize the air outlet system by opening manual condensate drain valve (34).
- Loosen the condensate drain tube of the compressor condensate trap from its coupling (35).
- Position the separator kit as shown and fix it with bolts (2). On GA30 up to GA45 and GA90 VSD, fix support (14) with bolt (15).
- Connect the previously disconnected condensate tube (36) to strainer (25).
- The bodywork of the compressor is provided with a plugged hole (32) on GA11/22 and GA90 VSD or hole (33) on GA30/75. Remove this plug and install the couplings delivered with the separator kit (for GA30 up to GA75: the elbow coupling at the inner side of the compressor bodywork, the straight one at the outer side; for GA11/22 and GA90 VSD the other way round).

HAF 7701
P58
REV 0

Connect water tube (29) to coupling (32) on GA30/75, or to coupling (33) on GA11/22 and GA90 VSD. Lead the condensate outlet flexible 1) from coupling (33) on GA30/75, or from coupling (32) on GA11/22 and GA90 VSD towards the condensate drain system.

- Remove cover (8) and fill vessel (3) with water until the water flows through tube (29). Reinstall the cover.

3.2 Bodywork modifications

Only for GA30/45 not provided with mounting holes

- Foam is stuck on the inside of the side panel. Cut out the foam over an area of 50 x 290 mm (see drawing D0563).
- Drill 2 holes (diameter 9 mm) in the side panel (see drawing D0564).
- Drill 3 holes (diameter 6.5 mm) in the frame and tap for bolts M8 (see drawing D0565). 2)

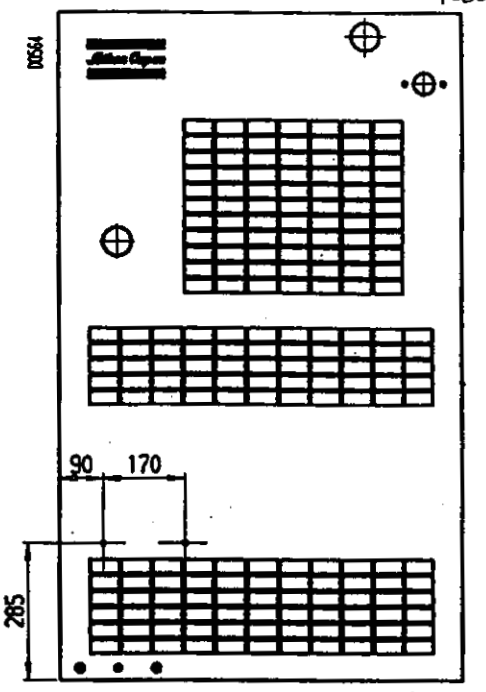

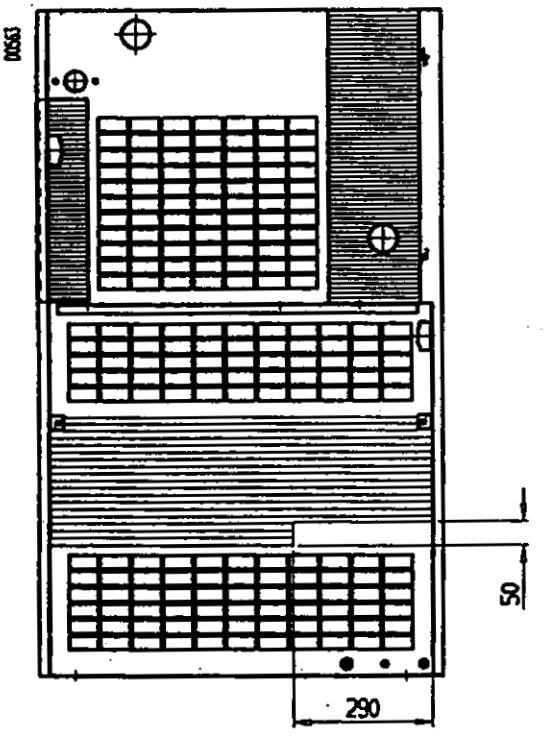

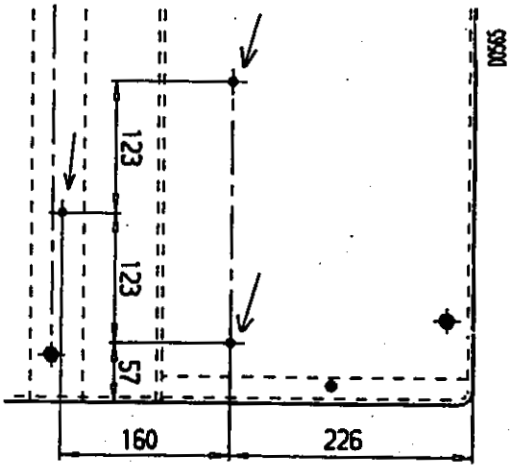

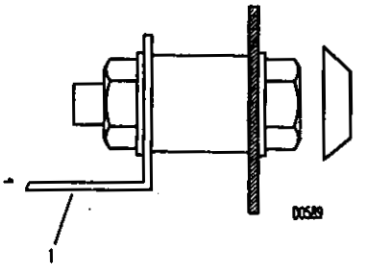

1) PVC tube with outer diameter 16 mm and inner diameter 12 mm. Can be ordered from Atlas Copco, part number 0070 6002 14.
2) If these mounting holes are already provided, longer bolts (M8 x 40) and a spacer (length 20 mm) are needed to fix the upper side of support (1) to the side panel (see drawing D0589). Additionally, following parts are needed:
   - 0147 1328 03 (2x) bolt - M8 x 40
   - spacer (2x) - diameter 10 mm / length 20 mm

- Consult section 3.1 to fit the separator kit. Following parts are needed besides the material supplied with the kit (see drawing D0568):
  - 0301 2335 00 (2x) washer
  - 0266 2110 00 (2x) nut
  - 1613 3672 00 (2x) cap

Only for GA55-75 not provided with mounting holes

- Drill 4 holes (diameter 4.1 mm) in support (1) (see drawing D0566).
- Drill 4 holes (diameter 4.1 mm) in panel (40) (see drawing D0567).
- Fix the separator kit to this panel using rivets (0129 3115 00).

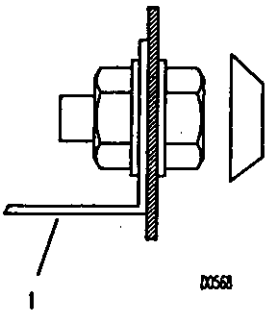

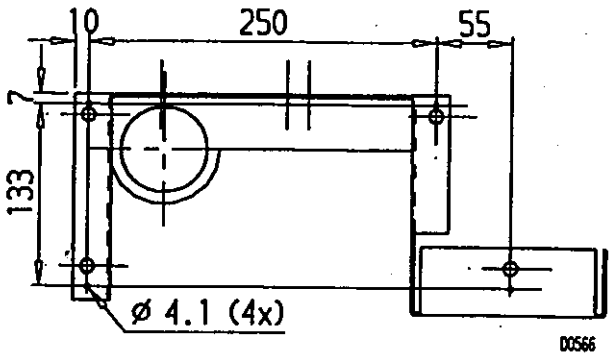

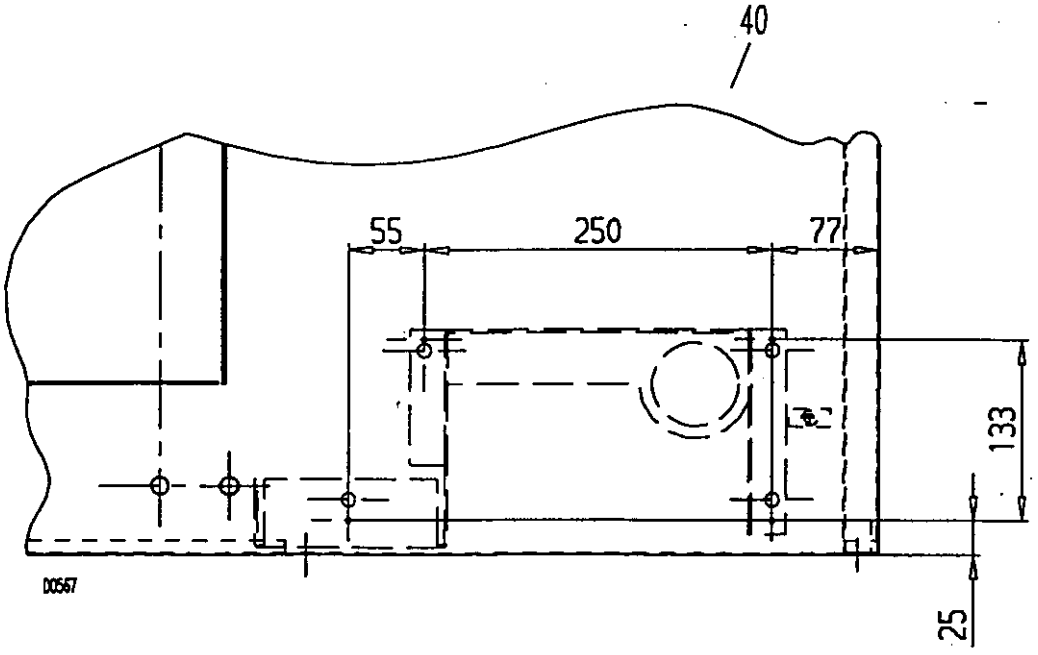

HWF 7701
P60
REVO

4 OPERATING INSTRUCTIONS

- Before starting, check that vessel (3) is filled. If necessary, gently pour water into filler pipe (50) until it flows through tube (29). Reinstall the cover.
- During operation of the compressor, an oil layer is built up above the water level in vessel (3). Depending on the capacity of the compressor and its operation cycle, the humidity of the inlet air and the oil content of the compressed air, it may take several weeks or months before an oil level is observed in collector (13).
- Regularly check that vessel (3) is filled. If necessary, gently pour water into filler pipe (50) until it flows through tube (29). Keep cover (8) installed.
- Weekly or every 50 operating hours, check pressure gauge (21) If the pressure reaches 2 bar(e) or every 6000 operating hours, replace filter (6): stop the compressor and close the air outlet valve, depressurize the outlet system by opening condensate drain valve (34) and unscrew the filter. Fill the new filter with water, lightly oil its gasket, screw it on and tighten by hand (approx. half a turn). Check strainer (25); if necessary, clean it.
- Monthly or every 200 operating hours, check the oil level in collector (13). If nearly full, disconnect oil tube (31) and deliver the oil to the local oil collection service. Reinstall an empty collector.

5 PICTOGRAPHS

51 Oil
52 Oil outlet
53 Condensate outlet
54 Pressure
55 Inlet
56 Service point (drain)
57 Separator inlet pressure
58 Oil gasket, screw on filter and tighten by hand (approx. half a turn)
59 Consult instruction leaflet before maintenance or repair

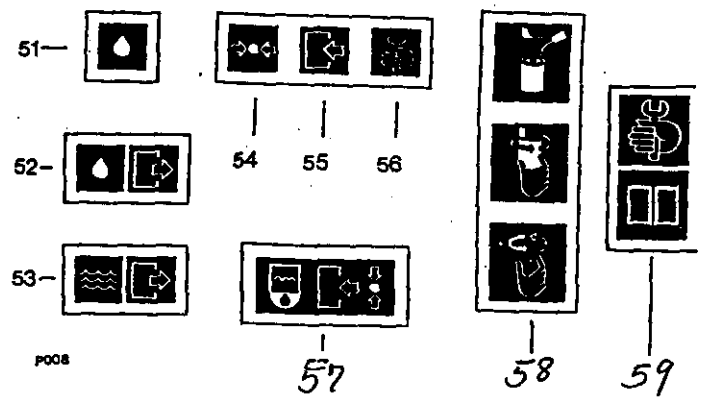

6 TECHNICAL DATA

Maximum allowed working pressure . . . . . 13 bar(e)

7 PARTS LIST

Ref.	Part number	Qty	Name	Remarks
1		1	Support	
	1613 7605 00		GA11-22	
	1613 7326 00		GA30-45	
	1613 7328 00		GA55-75	
	1613 7457 00		GA90 VSD	
2			Bolt	
	1619 2766 00	3	GA11-22	
	1619 2766 00	4	GA30-90 VSD	
	1613 7603 80	**1**	**OSD assembly GA11-22**	
6	1613 7602 00 •	1	Filter	
9	0653 9098 00 •	1	Flat gasket	
10	0686 3716 02 •	1	Hexagon plug	
	1613 7301 80	**1**	**OSD assembly GA30-90 VSD**	
6	1613 7277 00 •	1	Filter	
9	0653 9098 00 •	1	Flat gasket	
10	0686 3716 02 •	1	Hexagon plug	
11	0147 1322 03	3	Hexagon bolt	
12	0301 2335 00	3	Washer	
13		1	Oil collector	
	1613 7657 00	1	GA11-22	
	1613 7300 00	1	GA30-90 VSD	
14	1613 7327 00	1	Support 1)	
15	1619 2766 00	1	Bolt 1)	
17	1079 9913 69	1	Decal 2)	
18	1079 9912 11	1	Decal 2)	
19	1079 9912 07	1	Decal 2)	
20	1079 9912 28	1	Decal	
21	1619 5268 00	1	Gauge	
22	0070 6002 04	AR	Plastic tube	
23	0581 2024 32	1	Coupling	
24	0653 0500 47	1	Gasket 2)	
25	1613 7378 00	1	Strainer 2)	
28	1613 7335 00	1	Elbow coupling	
29	0070 6002 14	AR	Plastic tube	
30	1613 7335 00	1	Elbow coupling	
31	0070 6002 14	AR	Plastic tube	
32	1613 7342 00	1	Elbow coupling	
33	1613 7341 00	1	Coupling	
37	0584 9904 00	2	Insert	

1) Only for GA30-45 and GA90 VSD
2) Is comprised in OSD assembly
• Is comprised in assembly above (printed in bold)
AR Length as required
Qty Quantity

HNF 7701
p62
REV D

SAFETY PRECAUTIONS (continued)

the unit to contain air above atmospheric pressure shall be protected by a pressure-relieving device or devices as required.

13. Pipework or other parts with a temperature in excess of 80°C (175°F) and which may be accidentally touched by personnel in normal operation shall be guarded or insulated. Other high-temperature pipework shall be clearly marked.

14. If the ground is not level or can be subject to variable inclination, consult Atlas Copco.

15. The electrical connections shall correspond to the local codes. The units shall be grounded and protected against short circuits by fuses.

Operation

1. Air hoses shall be of correct size and suitable for the working pressure. Never use frayed, damaged or deteriorated hoses. Use only the correct type and size of hose end fittings and connections. When blowing through a hose or air line, ensure that the open end is held securely. A free end will whip and may cause injury. Make sure that a hose is fully depressurized before disconnecting it.

   Never play with compressed air. Do not apply it to your skin or direct an air stream at people. Never use it to clean dirt from your clothes. When using it to clean down equipment, do so with extreme caution and use eye protection.

2. The compressor is not considered as capable of producing air of breathing quality. For breathing air quality, the compressed air must be adequately purified according to local legislation and standards.

3. Never operate the unit when there is a possibility of taking in flammable or toxic fumes.

4. Never operate the unit at pressures below or in excess of its limit ratings as indicated on the Principal Data sheet.

5. Keep all bodywork doors shut during operation. The doors may be opened for short periods only, e.g. to carry out checks. Wear ear protectors when opening a door.

6. People staying in environments or rooms where the sound pressure level reaches or exceeds 90 dB(A) shall wear ear protectors.

7. Periodically check that:
   a. All guards are in place and securely fastened
   b. All hoses and/or pipes inside the unit are in good condition, secure and not rubbing
   c. There are no leaks
   d. All fasteners are tight
   e. All electrical leads are secure and in good order
   f. Safety valves and other pressure-relief devices are not obstructed by dirt or paint.
   g. Air outlet valve and air net, i.e. pipes, couplings, manifolds, valves, hoses, etc. are in good repair, free of wear or abuse

8. If warm cooling air from compressors is used in air heating systems, e.g. to warm up a workroom, take precautions against air pollution and possible contamination of the breathing air.

9. Do not remove any of, or tamper with, the sound-damping material.

Maintenance

Maintenance and repair work shall only be carried out under supervision of someone qualified for the job.

1. Use only the correct tools for maintenance and repair work.

2. Use only genuine spare parts.

3. All maintenance work, other than routine attention, shall only be [illegible] switched off. Take positive precaution to ensure that the unit cannot be started inadvertently.

   In addition, a warning sign bearing a legend such as "**work in progress; do not start**" shall be attached to the starting equipment.

4. Before removing any pressurized component, effectively isolate the unit from all sources of pressure and relieve the entire system of pressure.

5. Never use flammable solvents or carbon tetrachloride for cleaning parts. Take safety precautions against toxic vapours of cleaning liquids.

6. Scrupulously observe cleanliness during maintenance and repair. Keep dirt away by covering the parts and exposed openings with a clean cloth, paper or tape.

7. Never weld or perform any operation involving heat near the oil system. Oil tanks must be completely purged, e.g. by steam-cleaning, before carrying out such operations.

   Never weld on, or in any way modify, pressure vessels.

   Whenever there is an indication or any suspicion that an internal part of a machine is overheated, the machine shall be stopped but no **inspection covers shall be opened** before sufficient cooling time has elapsed; this to avoid the risk of spontaneous ignition of the oil vapour when air is admitted.

   Never use a light source with open flame for inspecting the interior of a machine, pressure vessel, etc.

8. Make sure that no tools, loose parts or rags are left in or on the unit.

9. Before clearing the unit for use after maintenance or overhaul, check that operating pressures, temperatures and time settings are correct and that the control and shut-down devices function correctly.

10. Every time the separator element is renewed, examine the discharge pipe and the inside of the oil separator vessel for carbon deposits; if excessive, the deposits should be removed.

11. Protect the motor, air filter, electrical and regulating components, etc. to prevent moisture from entering them, e.g. when steam-cleaning.

12. Make sure that all sound-damping material, e.g. on the bodywork and in the air inlet and outlet systems of the compressor, is in good condition. If damaged, replace it by genuine Atlas Copco material to prevent the sound pressure level from increasing.

13. Never use caustic solvents which can damage materials of the air net, e.g. polycarbonate bowls.

14. The following safety precautions are stressed when handling refrigerant R22, R12, etc.:

    a. Never inhale refrigerant vapours. Check that the working area is adequately ventilated; if required, use breathing protection.

    b. Always wear special gloves. In case of refrigerant contact with the skin, rinse the skin with water. If liquid refrigerant contacts the skin through clothing, **never tear off** or remove the latter; flush abundantly with fresh water over the clothing until all refrigerant is flushed away; then seek medical first aid.

    c. Always wear safety glasses.

Note: With stationary machine units driven by an internal combustion engine, allowance has to be made for extra safety precautions, e.g. spark arrestors, fuelling care, etc. Consult Atlas Copco.

All responsibility for any damage or injury resulting from neglecting these precautions, or by non-observance of ordinary caution and due care required in handling [illegible]

HNF 7701
p 63
REVO

INTENTIONALLY
BLANK

HMF 7701
P64
REW

The face of innovatio

What sets Atlas Copco apart as a company is our conviction that we can only excel in what we do if we provide the best possible know-how and technology to really help our customers produce, grow and succeed.

There is a unique way of achieving that - we simply call it the Atlas Copco way. It builds on interaction, on long-term relationships and involvement in the customers' process, needs and objectives. It means having the flexibility to adapt to the diverse demands of the people we cater for.

It's the commitment to our customers' business that drives our effort towards increasing their productivity through better solutions. It starts with fully supporting existing products and continuously doing things better, but it goes much further, creating advances in technology through innovation. Not for the sake of technology, but for the sake of our customer's bottom line and peace-of-mind.

That is how Atlas Copco will strive to remain the first choice, to succeed in attracting new business and to maintain our position as the industry leader.

No. 2920 1204 01 / DC 95.07

INF 770
PCS
REV 0

Atlas Copco Stationary Air Compressors

GA5 up to GA90C

User Manual

HMF 7701

p 66

REVO

INTENTIONALLY

BLANK

HNF 7701
p 67
AEJO

OWNERSHIP DATA

Unit type: .....
Motor type: .....
Delivery date: .....
Service Plan: .....

Owner's machine No.: .....
Unit serial No.: .....
Motor serial No.: .....
First start-up date: .....

Selected lubricants
Compressor: .....
Bearing grease type, electric motor: .....

Capacity: .....

Printed Matter Nos.
Atlas Copco instruction book: .....
Atlas Copco parts list: .....
Atlas Copco logbook: .....

Motor instruction book: .....
Motor parts list: .....

Local Atlas Copco Representative
Name: .....
Address: .....
Telephone: ..... Contact persons: Service: .....
Telex: ..... Parts: .....

SAFETY PRECAUTIONS

To be read attentively and acted accordingly before installing, operating or repairing the unit.

These recommendations apply to machinery processing or consuming air or inert gas. Processing of any other gas requires additional safety precautions typical to the application which are not included herein.

In addition to normal safety rules which should be observed with stationary air compressors and equipment, the following safety directions and precautions are of special importance.

When operating this unit, the operator must employ safe working practices and observe all related local work safety requirements and ordinances.

The owner is responsible for maintaining the unit in a safe operating condition. Parts and accessories shall be replaced if unsuitable for safe operation.

Installation, operation, maintenance and repair shall only be performed by authorized, trained, competent personnel.

Normal ratings (pressures, temperatures, time settings, etc.) shall be durably marked.

Any modification on the compressor shall only be performed in agreement with Atlas Copco and under supervision of authorized, competent personnel.

If any statement in this book, especially with regard to safety, does not comply with local legislation, the stricter of the two shall apply.

These precautions are general and cover several machine types and equipment; hence some statements may not apply to the unit(s) described in this book.

Installation

Apart from general engineering practice in conformity with the local safety regulations, the following directives are specially stressed:

1. A compressor shall be lifted only with adequate equipment in conformity with local safety rules.

   Loose or pivoting parts shall be securely fastened before lifting. It is strictly forbidden to dwell or stay in the risk zone under a lifted load. Lifting acceleration and retardation shall be kept within safe limits.

   Wear a safety helmet when working in the area of overhead or lifting equipment.

2. Any blanking flanges, plugs, caps and desiccant bags shall be removed before connecting up the pipes. Distribution pipes and connections shall be of correct size and suitable for the working pressure.

3. Place the unit where the ambient air is as cool and clean as possible. If necessary, install a suction duct. Never obstruct the air inlet. Care shall be taken to minimize the entry of moisture with the inlet air.

4. The aspirated air shall be free from flammable fumes or vapours, e.g. paint solvents, that can lead to internal fire or explosion.

5. Air-cooled units shall be installed in such a way that an adequate flow of cooling air is available and that the exhausted air does not recirculate to the inlet.

6. Arrange the air intake so that loose clothing of people cannot be sucked in.

7. Ensure that the discharge pipe from the compressor to the aftercooler or air net is free to expand under heat and that it is not in contact with or close to flammable material.

8. No external force may be exerted on the air outlet valve; the connected pipe must be free of strain.

9. If remote control is installed, the unit shall bear an obvious sign reading:

   DANGER: This machine is remotely controlled and may start without warning.

   As a further safeguard, persons switching on remotely controlled units shall take adequate precautions to ensure that there is no one checking or working on the machine. To this end, a suitable notice shall be affixed to the start equipment.

10. On units with automatic start-stop system, a sign stating "**This machine may start without warning**" shall be attached near the instrument panel.

11. In multiple compressor systems manual valves shall be installed to isolate each compressor. Non-return valves (check valves) shall not be relied upon for isolating pressure systems.

12. Never remove or tamper with the safety devices, guards or insulations fitted on the unit. Every pressure vessel or auxiliary installed outside

HNF 7701

Atlas Copco Stationary Air Compressors

P68
REV0

GA5 up to GA90C

User Manual for Elektronikon® regulator

Important

1. This Manual applies exclusively to the compressors equipped with the Atlas Copco Elektronikon regulator.
2. This Manual must be used together with the relevant Instruction books for the compressors.

- Copyright 1999, Atlas Copco Airpower n.v., Antwerp, Belgium.
  Any unauthorized use or copying of the contents or any part thereof is prohibited. This applies in particular to trademarks, model denominations, part numbers and drawings.

- This instruction book meets the requirements for instructions specified by the machinery directive 98/37/EC and is valid for CE as well as non-CE labelled machines.

No. 2920 1207 06

Registration code: APC G5-10/'98 / 38 / 994
APC G11-22 / 38 / 981
APC G30-55C/'98 / 38 / 992
APC G55-90C/'96 / 38 / 987

Replaces 2920 1207 05

1999-11

Web-site: http://www.atlascopco-compressors.com

2920120706

Atlas Copco

HWF 7701
P69
REVO

Contents

Page

1 **General description** ... 3
1.1 Controlling the compressor ... 3
1.2 Protecting the compressor ... 3
1.2.1 Shut-down and motor overload ... 3
1.2.2 Shut-down warning ... 3
1.2.3 Control of motor rotation direction ... 3
1.2.4 Warning ... 3
1.3 Monitoring components subject to service (service warning) ... 3
1.4 Automatic restart after voltage failure ... 3

2 **Control panel** ... 4
2.1 Indicators, keys and buttons ... 4
2.2 Pictographs ... 4

3 **Display - keys** ... 5
3.1 Display ... 5
3.2 Scroll keys ... 5
3.3 Tabulator key ... 5
3.4 Function keys ... 5

4 **Menu-driven control programs** ... 5
4.1 Function of control programs ... 5
4.2 Selecting a menu ... 9
4.2.1 Main display ... 9
4.2.2 Calling up other menus ... 9
4.2.3 Returning to the main menu or main display 9

5 **Main display: compressor status in short/gateway to all functions** ... 9
5.1 Function ... 9
5.2 Procedure ... 9

6 **Main menu: gateway to other functions** ... 10
6.1 Function ... 10
6.2 Procedure ... 10

7 **Status data submenu: calling up status of protection functions and resetting** ... 10
7.1 Function ... 10
7.2 Procedure ... 10
7.2.1 No shut-down warning message or shut-down message exists ... 11
7.2.2 A shut-down message exists ... 11
7.2.3 A shut-down warning message exists ... 11
7.2.4 A warning message exists ... 11
7.3 Shut-down reset ... 12
7.4 Reset of motor overload ... 12

8 **Measured data submenu: calling up measured data** 12
8.1 Function ... 12
8.2 Procedure ... 12

9 **Hours submenu: calling up running hours, loading hours, regulator hours and motor starts** ... 13
9.1 Function ... 13
9.2 Procedure ... 13

10 **Service submenu: calling up and resetting service messages** ... 14
10.1 Function ... 14
10.2 Calling up service messages ... 14
10.3 Calling up running hours and service level ... 14
10.4 Service reset ... 14

11 **Test submenu: display test** ... 14
11.1 Function ... 14
11.2 Procedure ... 14

12 **Modify settings submenu: modifying settings for regulation, protection and service** ... 15
12.1 Function ... 15
12.2 Procedure ... 15
12.3 Modifying compressor regulation settings ... 15
12.3.1 Modifying the loading pressure ... 15
12.4 Modifying protection settings ... 16
12.4.1 Element outlet temperature ... 16
12.4.2 Dewpoint temperature ... 17
12.4.3 Cooling water outlet temperature ... 17
12.5 Modifying service settings ... 18

13 **Timer submenu: programming compressor start/stop commands** ... 19
13.1 Function ... 19
13.2 Procedure ... 19
13.2.1 To program start/stop commands ... 19
13.2.2 To activate/deactivate the timer ... 19
13.2.3 To display the list of commands ... 19
13.2.4 To modify a command ... 19
13.2.5 To add a command ... 20
13.2.6 To delete a command ... 20

14 **Configuration submenu: reprogramming time, date, display language, units, motor start mode and date format** ... 21
14.1 Function ... 21
14.2 Procedure ... 21

15 **Saved data submenu: calling up compressor data saved by regulator** ... 21
15.1 Function ... 21
15.2 Procedure ... 21
15.2.1 Example of the last shut-down data ... 21

16 **More function: quick look at actual compressor status** ... 22
16.1 Function ... 22
16.2 Procedure ... 22

17 **Manually loading/unloading** ... 23
17.1 Function ... 23
17.2 Manually unloading ... 23
17.3 Manually loading ... 23

18 **Programmable settings** ... 23
18.1 Regulation settings ... 23
18.2 Protection settings ... 24
18.3 Service settings ... 25

1 GENERAL DESCRIPTION

The electronic regulator automatically controls the compressor, i.e.:
- Loading and unloading the compressor
- Stopping the compressor whenever possible
- Restarting the compressor when required

In order to control the compressor and to read and modify programmable parameters, the regulator has a control panel provided with:
- LEDs indicating the status of the compressor
- A display indicating the operating conditions, a service need or a fault
- Keys to control the compressor and to have access to the data collected by the regulator
- Buttons to manually start and stop the compressor
- An emergency stop button

In general, the regulator has following functions:
- Controlling the compressor
- Protecting the compressor
- Monitoring components subject to service
- Automatic restart after voltage failure (made inactive)

1.1 Controlling the compressor

The regulator maintains the net pressure between programmable limits by automatically loading and unloading the compressor depending on the air consumption.

The regulator takes into account a number of programmable settings, such as:
- Unloading pressure
- Loading pressure
- Minimum stop time
- Maximum number of motor starts

The regulator stops the compressor whenever possible (when the expected unloading period exceeds a programmed value) to reduce the power consumption and restarts it automatically when the net pressure decreases. In case the expected unloading period is below a programmed value, the regulator keeps the compressor running to prevent too-short standstill periods.

When the compressor has stopped automatically and the net pressure decreases, the regulator will start the compressor before the net pressure has dropped to the loading pressure to prevent the net pressure from falling under the programmed minimum level.

When stopping the compressor manually, the regulator will unload the compressor for 30 seconds and then stop the compressor. 1)

1.2 Protecting the compressor

HNF 7701
P70
REVO

1.2.1 Shut-down and motor overload

If the compressor element outlet temperature exceeds the programmed shut-down level, the compressor will be stopped. This will be indicated on the control display.

The compressor will also be stopped in case of overload of the drive motor or fan motor. 2)

1.2.2 Shut-down warning

If the compressor element outlet temperature exceeds a programmed value just below the shut-down level, this will also be indicated to warn the operator before the shut-down level is reached.

1.2.3 Control of motor rotation direction

Regulators for GA90C and for later production GA30 up to -75 are provided with a control function for correct rotation direction of the motor: a message will appear on the display of the regulator if the rotation direction is wrong. In this case, switch off the voltage and reverse two incoming lines.

1.2.4 Warning

A warning message also appears if the cooling water temperature or dewpoint temperature exceeds the warning level. See section 7.2.4.

1.3 Monitoring components subject to service (service warning)

The regulator continuously monitors critical components (oil, oil filter, oil separator and air filter). Each input is compared to programmed limits. Exceeding these limits causes a message on the control display to warn the operator to replace the indicated component.

1.4 Automatic restart after voltage failure

The regulator has a built-in function to automatically restart the compressor if the voltage is restored after voltage failure. For compressors leaving the factory, this function is made inactive. If desired, the function can be activated. Consult Atlas Copco.

Footnotes chapter 1

1) If the compressor was running at that moment in automatic unloading condition for 10 seconds, it will remain running unloaded for 30 - 10 = 20 seconds before stopping.
2) For GA30 up to GA90C only.

2 CONTROL PANEL

2.1 Indicators, keys and buttons (Fig. 2.1)

Ref.	Designation	Function
1	Automatic operation LED	Indicates that the regulator is automatically controlling the compressor: the compressor is loaded, unloaded, stopped and restarted depending on the air consumption and the limitations programmed in the regulator.
2	Voltage on LED	Indicates that the voltage is switched on.
3	General alarm LED	Is alight if a warning or shut-down warning condition exists or if a sensor is out of order. See section 7. Blinks in case of shut-down, if a sensor with shut-down function (e.g. TT11) is out of order or after an emergency stop. See section 7.
4	Display	Indicates messages concerning the compressor operating condition, a service need or a fault. See section 3.1.
5	Function keys	Keys to control and program the compressor. See section 3.4.
6	Scroll keys	Keys to scroll through the display. See section 3.2.
7	Tabulator key	Key to go to the next field of the display. See section 3.3.
8	Start button	Push button to start the compressor. LED (1) lights up indicating that the regulator is operative (in automatic operation). The LED goes out after unloading the compressor manually.
9	Stop button	Push button to stop the compressor. LED (1) goes out. The compressor will stop after running in unloaded condition for 30 seconds. See also section 1.1.
S3	Emergency stop button	Maintained-action push button to stop the compressor immediately in case of emergency. After remedying the trouble, unlock the button by turning it to the left or by pulling it out.

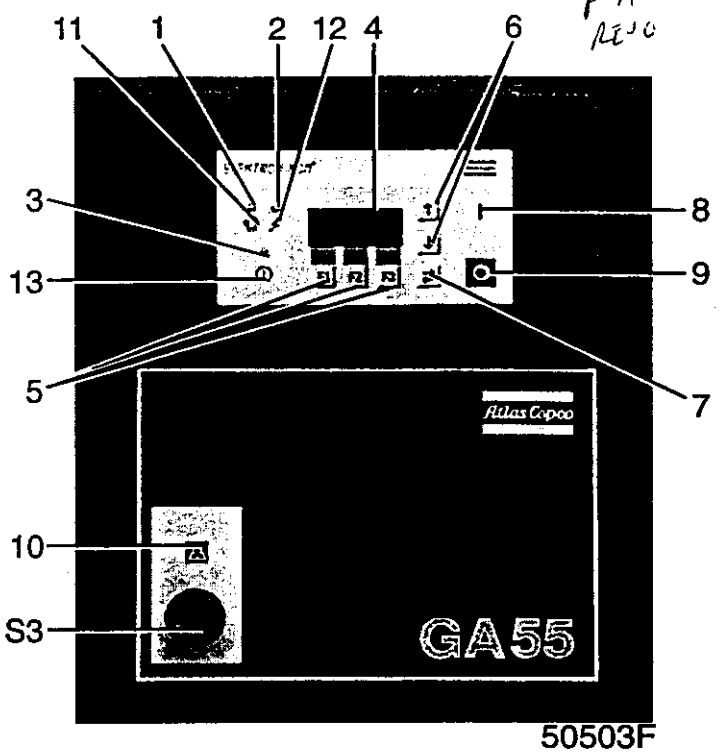

Fig. 2.1 Control panel

2.2 Pictographs (Fig. 2.1)

Ref.	Designation
10	Emergency stop
11	Automatic operation
12	Voltage on
13	Alarm

Delivery air bar Auto loaded		7.0
Menu	More	Unld
F1	F2	F3

Fig. 2.2 Typical example of a display

3 DISPLAY - KEYS

3.1 Display (4-Fig. 2.1)

The display has four lines of 16 characters. A typical display is shown in Fig. 2.2. It indicates:

1. On the first three lines:
   - The name of the sensor of which the actual reading is displayed
   - The unit and actual reading of the sensor
   - Messages regarding the compressor operating condition (compressor loaded, off, etc.), a service need (e.g. for the oil filter and air filter) or a fault (e.g. shut-down)
2. On the fourth line, just above the three function keys (F1/F2/F3), the actual functions of these keys.

3.2 Scroll keys (6-Fig. 2.1)

These keys, labelled with vertical arrows, allow to scroll through the display.

As long as a downwards pointing arrow is shown at the utmost right position of the display, the key (6) with the same symbol can be used to see the next item.

As long as an upwards pointing arrow is shown at the utmost right position of the display, the key (6) with the same symbol can be used to see the previous item.

3.3 Tabulator key (7-Fig. 2.1)

This key, labelled with two horizontal arrows, allows the operator to go to the next field of the display, e.g. during modifying of programmable parameters.

3.4 Function keys (5-Fig. 2.1)

The keys are used:
- To manually load/unload the compressor
- To call up or program settings
- To reset an active motor overload, shut-down or service message, or an emergency stop
- To have access to all data collected by the regulator

The function keys allow to make the required selection from a menu of possibilities. The functions of the keys vary depending on the displayed menu. The actual function is abbreviated and indicated on the bottom line of the display just above the relevant key. Only the active and relevant functions at a moment are shown.

4 MENU-DRIVEN CONTROL PROGRAMS

In order to facilitate programming and controlling, menu-driven control programs have been implemented in the regulator.

4.1 Function of control programs (Figs. 4.1 up to 4.3)

Program	See section	Function
MAIN DISPLAY	5	Shows in short the operation status of the compressor. Is the gateway to all functions.
MAIN MENU	6	Is the gateway to other functions via submenus.
SUBMENUS		
Status data	7	Calling up the status of the compressor protection functions (shut-down and shut-down warning). Resetting of a shut-down and motor overload.
Measured data	8	Calling up the actual measured temperature at the compressor element outlet, the dewpoint (on compressors with integrated air dryer) and the status of the motor overload protection. **On GA55-75-90C** also the actual pressure difference over the oil separator, the status of the fan motor overload protection and on water-cooled compressors also the actual cooling water outlet temperature.
Hours	9	Calling up the running hours, loading hours, regulator hours and number of motor starts.
Service	10	Calling up and resetting the service messages for the oil, oil filter, oil separator, air filter.
Test	11	Display test.
Modify settings	12	Modifying the settings for regulation (e.g. loading and unloading), for protection (e.g. temperature shut-down level) and for service (e.g. for the oil).
Timer	13	Programming the compressor start/stop commands.
Configuration	14	Programming the time, date, display language, units, motor start mode and date format. **On GA5 up to GA45 and GA55C**, dewpoint temperature display mode and the dewpoint protection.

INF 7701
p 73
REV0

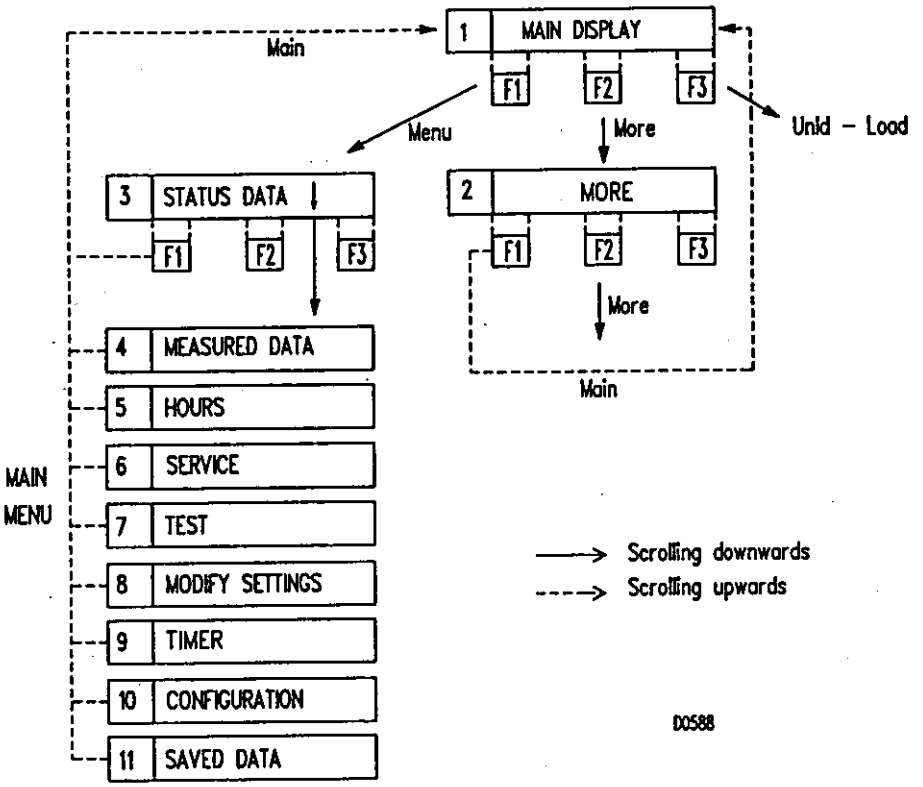

Fig. 4.1 General menu flow

INF 7701

HNF 7701
P74
REV D

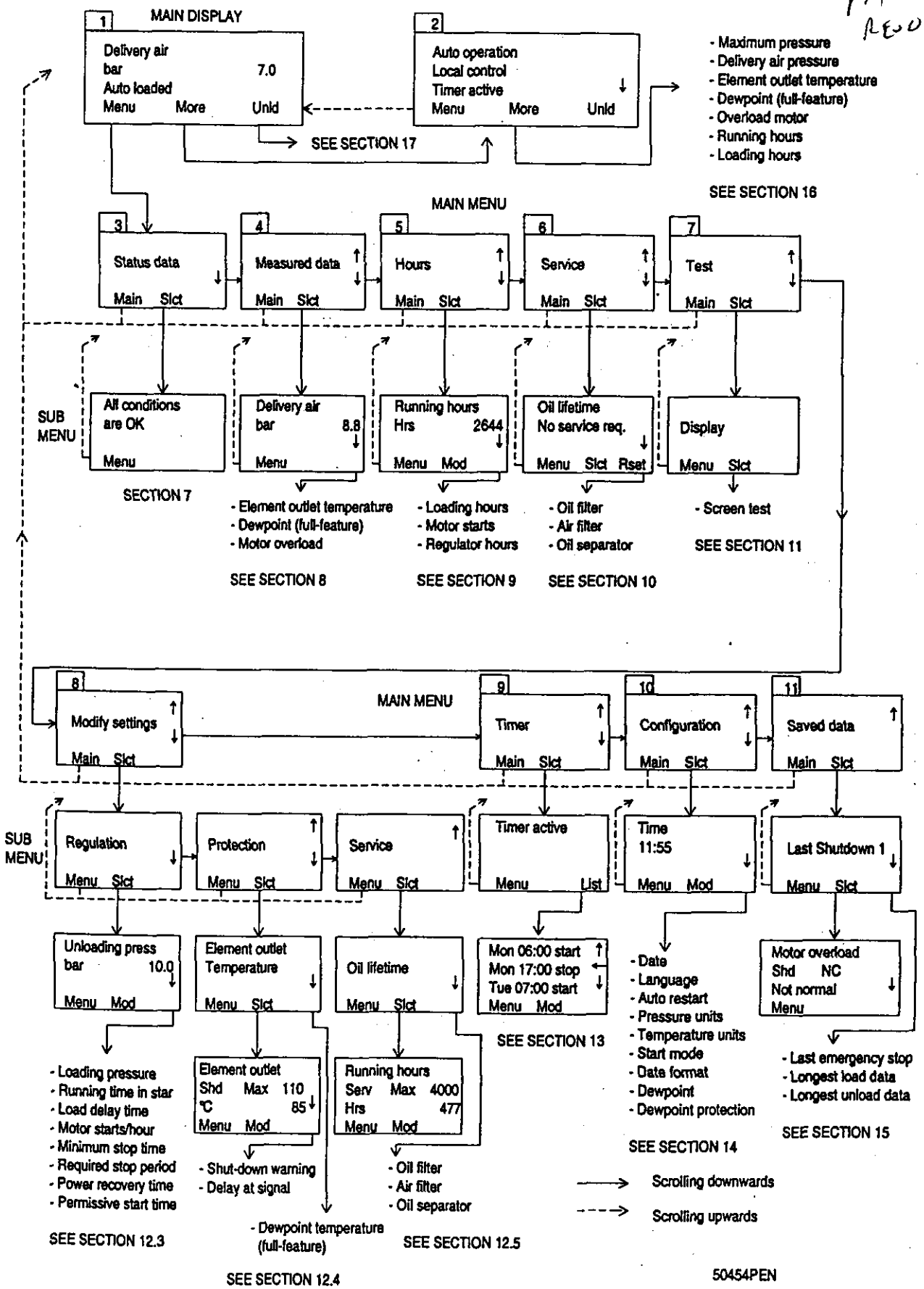

Fig. 4.2 Menu flow for regulator of GA5 up to GA45 and GA55C

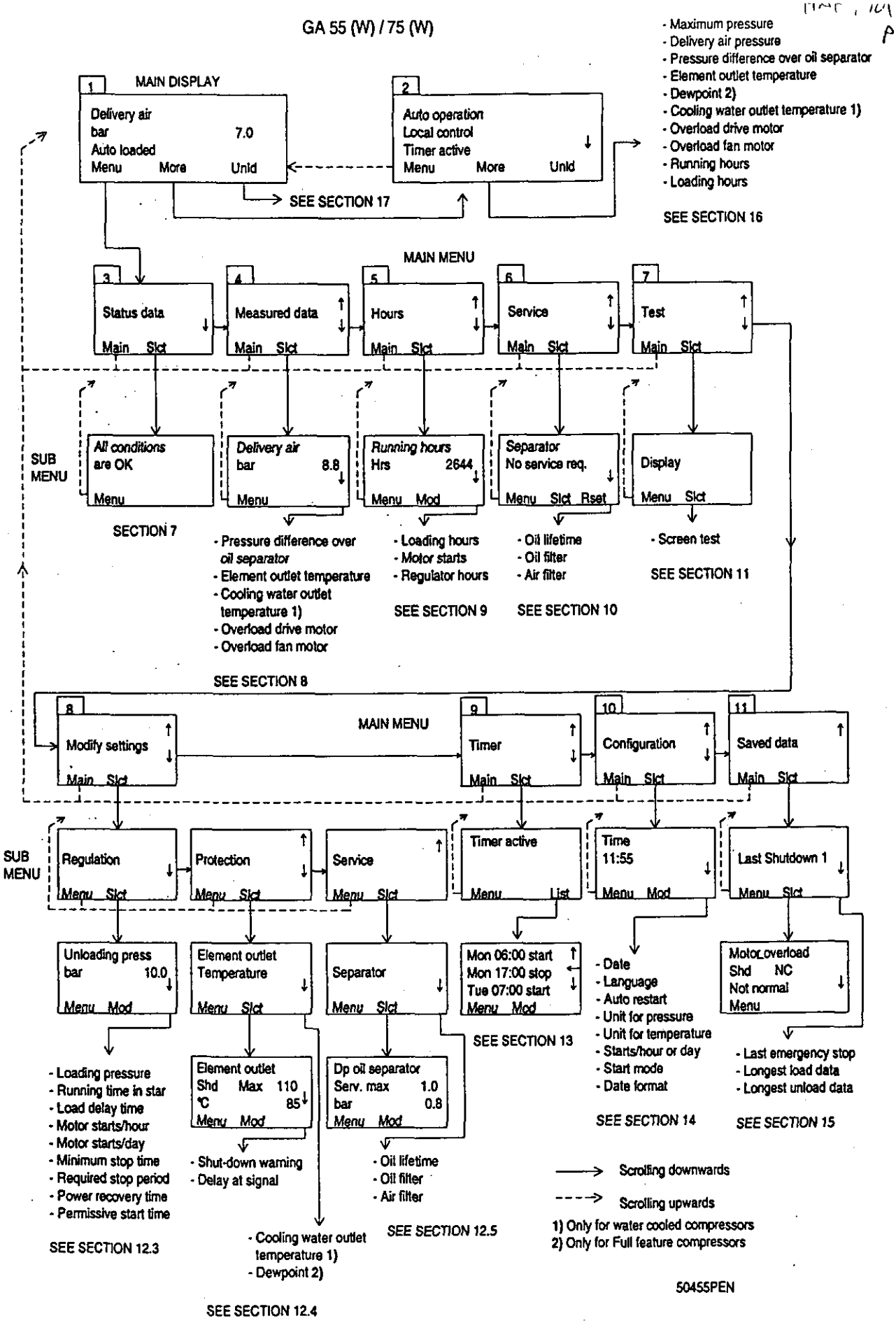

Fig. 4.3 Menu flow for regulator of GA55(W)-75(W)-90C

Program	See section	Function
Saved data	15	Calling up the saved data: last shut-down, last emergency stop, longest load, longest unload.
MORE	16	Quick look at the actual status of the compressor: automatic or manual control, local or remote control, start/stop timer on or off, max. pressure, delivery air pressure and temperature, dewpoint, motor overload status, running and loading hours, on **GA55-75-90C** also the pressure difference over the oil separator.
MANUAL LOAD/UNLOAD	17	To manually load/unload the compressor.

4.2 Selecting a menu (Figs. 4.1 up to 4.3)

4.2.1 Main display

When the voltage is switched on, the MAIN DISPLAY is shown automatically, showing in short the operation status of the compressor. The other menus are selected by pressing one of the function keys (5-Fig. 2.1).

4.2.2 Calling up other menus

MAIN MENU
Pushing the key <<Menu>> initiates the MAIN MENU, giving access to most other functions via submenus; the submenus can be selected by pressing the key <<Slct>> (select); see section 6.

MORE
Pushing the key <<More>> gives the operator a quick look at the actual status of the compressor; see section 16.

UNLOAD or LOAD
The keys <<Unld>> (unload) and <<Load>> are used to manually unload and load the compressor respectively. See section 17.

4.2.3 Returning to the main menu or main display

MAIN MENU
Whenever displayed on the bottom line of the screen (4-Fig. 2.1), press the key <<Menu>> to return from a submenu to the MAIN MENU.

MAIN DISPLAY
Whenever displayed, press the key <<Main>> to return from a menu to the MAIN DISPLAY.

5 MAIN DISPLAY: compressor status in short/gateway to all functions

HNF 7701
p76
REV 0

5.1 Function

The main display shows in short the compressor operation stat and is the gateway to all functions implemented in the regulator.

5.2 Procedure

The main display is shown automatically when the power is switched on.

If the function keys or arrow keys (5, 6 and 7-Fig. 2.1) are not used for 4 minutes, the regulator will automatically return to the main display.

Exception is made, when the screen is left untouched when modifying data in the regulator. In this case, the screen will remain unchanged, since the regulator does not take a decision whether to accept or refuse the new data.

Delivery air bar		7.0
Auto loaded		
Menu	More	Unld
F1	F2	F3

Fig. 5.1 Example of the main display

Line	Indicates	Remarks
1	Sensor which is active	-
2	Unit-actual reading	The unit for pressure can be bar, psi or kg/cm² depending on the programmed selection. The unit for temperature can be C (degrees celsius) or F (degrees fahrenheit). See section 14.
3	Compressor status	Examples: - Compressor Off - Manual Unloaded If the timer is activated (see section 13), the message "timer active" will also be shown.
3	Motor overload, shut-down or warning	If the unit is shut down, the regulator will automatically call up the status display (section 7) on which the cause for the shut-down is indicated. It remains possible to have a closer look at oth parameters related to the shu down by means of the menus.

Line	Indicates	Remarks
3	Service required	Indicates that one of the monitored components needs servicing. Consult section 10 to find out the exact cause for this message.
3	Sensor error	Indicates that a sensor is out of order: **On GA5 up to GA45 and GA55C:** - Temperature sensor at the outlet of the compressor element - Outlet pressure transducer - **On Full-feature compressors,** the dewpoint sensor Stop the compressor. Switch off the voltage and depressurize the compressor as described in the relevant instruction book. Check the sensor wiring. Replace the sensor or transducer, if necessary.
3	Sensor error	Indicates that a sensor is out of order: **On GA55-75-90C:** - Temperature sensor at the outlet of the compressor element - Outlet pressure transducer - Pressure difference sensor of the oil separator - **On water-cooled compressors,** the water outlet temperature sensor - **On Full-feature compressors,** the dewpoint sensor Stop the compressor. Switch off the voltage and depressurize the compressor as described in the relevant instruction book. Check the sensor wiring. Replace the sensor or transducer, if necessary.
3	Remote control	Indicates that the compressor is set in remote control. Consult Atlas Copco.
4	Functions of keys below display	See section 4.2.

Note
When more than one message needs to be displayed (e.g. both warning and service), the messages will be displayed one after the other for 3 seconds.

6 MAIN MENU: Gateway to other functions

HNF 7701
P77
REV6

6.1 Function

The main menu gives the operator access to most other functions via submenus.

6.2 Procedure

The main menu is activated by pressing:
- The key <<Menu>> on the main display (Fig. 5.1)
- The key <<Menu>> on whatever submenu display

Status data		↓
Main	Slct	
F1	F2	F3

Fig. 6.1 Example of a main menu

The display indicates the name of the submenu which can be selected (only one name is shown, use the scroll keys (6-Fig. 2.1) to find the other names).

In this example, the display shows:
- That the <<Status data>> submenu can be selected
- That other submenus are available using the scroll key
- That the key <<Main>> can be used to return to the main display
- That the key <<Slct>> (select) can be used to select the submenu <<Status data>> to get more detailed information

7 STATUS DATA SUBMENU: Calling up status of protection functions and resetting

7.1 Function

The status data submenu gives information regarding the status of the compressor protection functions (shut-down, warning and shut-down warning) and allows resetting of a shut-down and motor overload.

7.2 Procedure

1. Activate the main menu by pressing the key <<Menu>> (5-Fig. 2.1).
2. The first option shown on the second line of the display is <<Status data>>.
3. Press the key <<Slct>> (select) (5-Fig. 2.1).

7.2.1 No shut-down warning message or shut-down message exists

In this case, LED (3-Fig. 2.1) is out and the message on the display indicates that all conditions are normal (Fig. 7.1):

```
All conditions
are OK

Menu
F1              F2              F3
```

Fig. 7.1 Example of a status data screen

7.2.2 A shut-down message exists

LED (3-Fig. 2.1) blinks and the shut-down screen (Fig. 7.2) automatically appears on the display if the compressor is shut down.

In case of a shut-down due to too high an element outlet temperature, a screen similar to that in Fig. 7.2 will appear:

```
Element outlet
Shd             Max             110
C                               112
Menu        **              **  Rset
F1              F2              F3
```

Fig. 7.2 Example of a status data screen

The top line of the display, the actual temperature (112 degrees celsius) and the indicators (**) are blinking.

It remains possible to scroll through other menus and then return to the status data menu. In this case, the first option of a submenu will be shown, i.e. <<shut-downs>>. This option can be selected by pressing the key <<Slct>> (select) to return to the shut-down screen (Fig. 7.2). The other options (i.e. <<protections>> and <<start failures>>) can be selected by scrolling until the desired option appears and then pressing the key <<Slct>> (select) to collect other information. If the message <<All conditions are OK>> appears when selecting <<protections>> and <<start failures>>, this means that:

- Besides the existing shut-down condition there are no other alarms
- There are no start failures

See section 7.3 to reset the shut-down message.

7.2.3 A shut-down warning message exists

1. LED (3-Fig. 2.1) is alight and the main display screen will change into a screen similar to the one in Fig. 7.3 if a shut-down warning exists.

```
Delivery air
bar                             7.0
*Shutd          Warn*
Menu        **  More        **  Unld
F1              F2              F3
```

Fig. 7.3 Example of a shut-down warning screen

```
Element outlet
Shdw            Max             100
C                               106
Menu        **              **
F1              F2              F3
```

Fig. 7.4 Example of a shut-down warning screen

2. The indicators (**) are blinking and the warning message appears alternately with the messages indicating whether the compressor runs unloaded or loaded.
3. Press the key <<Menu>>: the main menu appears (Fig. 6.1) with blinking indicators (**).
4. Press the key <<Slct>> (select), use the scroll key until the option <<protections>> is shown and select this option. A screen similar to the one in Fig. 7.4 appears, indicating that the temperature at the outlet of the compressor element (106 degrees celsius) is too high. Consult the Instruction book to remedy the trouble.
5. If necessary, stop the compressor by means of button O (9-Fig. 2.1) and wait until the compressor has stopped.
6. Switch off the voltage and inspect the compressor.
7. The warning message will disappear automatically as soon as the warning condition disappears.

7.2.4 A warning message exists

1. LED (3-Fig. 2.1) is alight and the main display screen will change into a screen similar to that shown in Fig. 7.5.

```
Delivery air
bar                             7.0
*Warning    *
Menu        **  More        **  Unld
F1              F2              F3
```

Fig. 7.5 Example of a warning screen

2. The indicators (**) are blinking and the warning message appears alternately with the messages indicating whether the compressor runs unloaded or loaded. This warning indicates that:
   - **On water-cooled GA55-75 compressors**, the cooling water outlet temperature exceeds the programmed warning level.
   - **On Full-feature compressors** (compressors w. integrated air dryer), the dewpoint temperature exceeds the warning level.

3. Looking for more details is carried out in a similar way as described in steps 3 and 4 of section 7.2.3. If necessary, stop the compressor and remedy the fault.

7.3 Shut-down reset

1. Suppose that the shut-down screen as shown in Fig. 7.2 exists.
2. The display indicates:
   - <<Shd>>: the compressor is shut down due to too high a compressor <<element outlet>> temperature
   - <<Max>>: the maximum level is <<110>> degrees celsius
   - The actual temperature is <<112>> degrees celsius

   The fourth line of the screen shows the available function keys, i.e.:
   - <<Menu>> to return to the submenu allowing to choose between <<shut-downs>>, <<protections>> and <<start failures>>
   - <<Rset>> (reset)
3. Switch off the voltage and remedy the trouble. After remedying and when the shut-down condition has disappeared, switch on the voltage and press the key <<Rset>> (reset). Press the keys <<Menu>> and <<Main>> to return to the main display and restart the compressor by means of button I (8-Fig. 2.1).

7.4 Reset of motor overload

If the drive motor overload relay (F21) or fan motor circuit breaker (Q15) 1) trips, the compressor will be shut down and LED (3-Fig. 2.1) will blink. Following screen appears:

Motor overload			
Shd	NC		
Not normal			
Menu **	**	**	Rset
F1	F2		F3

Fig. 7.6 Example of a motor overload display

The example indicates that:
- The compressor is shut down due to motor overload
- The contacts of the motor overload relay are normally closed
- The condition is <<Not normal>> (i.e. the contacts are actually open)

The top line of the display and the indicators (**) are blinking.

1. Switch off the voltage and remedy the trouble. The overload relay (F21) resets itself after cooling off but the circuit breaker (Q15) 1) must be reset manually. The <<Not normal>> message will change into <<Normal>>.
2. Switch on the voltage and press the key <<Rset>> (reset) and then the keys <<Menu>> and <<Main>> to return to the main display.
3. Restart the compressor by means of button I (8-Fig. 2.1).

Footnotes chapter 7

1) For GA30 up to GA90C only.

8 MEASURED DATA SUBMENU: Calling up measured data

HNF 7701
P79
REJO

8.1 Function

To call up the measured data:
- The actual pressure
- The actual temperature at the outlet of the compressor element
- The programmed shut-down and warning temperatures for the compressor element
- The dewpoint (only for Full-feature compressors)
- The status of the motor overload protection

On GA55-75-90C also:
- The actual pressure difference over the oil separator
- The status of the fan motor overload protection

On water-cooled GA55-75 also the actual cooling water outlet temperature

8.2 Procedure

1. Activate the main menu by pressing the key <<Menu>> (5-Fig. 2.1).
2. Scroll through the available options by using the scroll keys (6-Fig. 2.1) until the option <<Measured Data>> is shown on the second line of the display.
3. Press the key <<Slct>> (select) (5-Fig. 2.1). A screen similar to the one in Fig. 8.1 appears:

Delivery air			
bar		8.8	
			↓
Menu			
F1	F2	F3	

Fig. 8.1 Example of a measured data display

The display shows that the outlet pressure is 8.8 bar and that the key ↓ can be used to call up other measured data.

4. If one of the sensors is linked to a protection function (shut-down or motor overload), a screen similar to the one in Fig. 8.2 appears:

Element outlet			↑
C		85	
Shd	Max	110	↓
Menu	Warn		
F1	F2	F3	

Fig. 8.2 Example of a measured data display

The display indicates that:
- The reading shown is the compressor <<element outlet>>

temperature
- A shut-down (<<Shd>>) level is programmed, i.e. <<110>> degrees celsius maximum (<<Max>>)
- The actual temperature is <<85>> degrees celsius
- The key <<Warn>> can be used to look at the warning level, see step 7.

5. On Full-feature compressors only, the scroll keys can be used to show the dewpoint. See Fig. 8.3.

Dewpoint			↑
C		4	
Warn	Max	15	↓
Menu			
F1	F2	F3	

Fig. 8.3 Example of a measured data display

The display indicates that:
- The reading shown is the <<dewpoint>> temperature
- A warning (<<Warn>>) level is programmed, i.e. <<15>> degrees celsius maximum (<<Max>>)
- The actual temperature is << 4>> degrees celsius

Note: on GA5 up to GA45 and GA55C, only the status of the dewpoint (normal or not normal) is shown unless the dewpoint display mode in the <<Configuration>> submenu, see section 14, is set to value.

6. The vertical arrow at the right-hand side indicates that the display can be scrolled downwards to show other measured data, e.g. the motor overload condition; see Fig. 8.4.

Overload motor			↑
Normal			
Shd	PeSt	NC	
Menu			
F1	F2	F3	

Fig. 8.4 Example of a measured data display

The display indicates that:
- The contacts of the motor overload relay are normally closed (<<NC>>)
- The condition of the relay is <<Normal>> (i.e. contacts closed)
- Opening of the contacts of the relay will shut down (<<Shd>>) the compressor
- PeSt (permissive start function): the compressor will not start in case of a motor overload

7. After pressing the key <<Warn>> on the screen shown in Fig. 8.2, a screen similar as in Fig. 8.5 is shown:

Element outlet		
C		85
Shdw	Max	100
	Rtrn	
F1	F2	F3

Fig. 8.5 Example of a measured data display

The display indicates that a shut-down warning (<<Shdw>>) level is programmed, i.e. 100 degrees celsius maximum (<<Max.>>). Press the key <<Rtrn>> to return to the screen of Fig. 8.2.

HNF 7701
P80
RENO

9 HOURS SUBMENU: Calling up running hours, loading hours, regulator hours and motor starts

9.1 Function

To call up the running hours and loading hours of the compressor, the hours the regulator has been in operation as well as the number of motor starts.

9.2 Procedure

1. Activate the main menu by pressing the key <<Menu>> (5-Fig. 2.1).
2. Scroll through the available options by using the scroll keys (6-Fig. 2.1) until the option <<Hours>> is shown on the second line of the display.
3. Press the key <<Slct>> (select) (5-Fig. 2.1).

The display will show the running hours. By using the scroll keys (6-Fig. 2.1), other options can be selected to call up the data of the other timers, i.e. loading hours, motor starts and regulator hours.

Typical example (Fig. 9.1)

In this example the option <<Loading hours>> is selected:

Loading hours			↑
Hrs	1000		
			↓
Menu	Mod		
F1	F2	F3	

Fig. 9.1 Example of loading hours display

The display indicates that the compressor has run loaded for 1000 hours.

The bottom line of the screen shows the available function keys, i.e. <<Menu>> to return to submenu and <<Mod>> to modify the value of the indicated timer; if this should be required, consult Atlas Copco.

10 SERVICE SUBMENU: Calling up and resetting service messages

10.1 Function

To call up and reset service messages for following monitored components: oil, oil filter, oil separator and air filter.

10.2 Calling up service messages

1. Activate the main menu by pressing the key <<Menu>> (5-Fig. 2.1).
2. Scroll through the available options by using the scroll keys (6-Fig. 2.1) until the option <<Service>> is shown on the second line of the display.
3. Press the key <<Slct>> (select) (5-Fig. 2.1).

   The display will show the name of the monitored component and the message whether service is needed or not. A vertical scroll arrow appears on the display indicating to scroll through the display to check the condition of the other components subject to service.

Oil filter					↑
Service req					↓
Menu	**	Slct	**	Rset	
F1		F2		F3	

Fig. 10.1 Example of service display

The display indicates:
- The component which is monitored: the <<oil filter>>
- That the filter needs service (<<Service req>>)

The display also indicates the part number of the service kit to be used.

The bottom line of the screen shows the available function keys, i.e.
- <<Menu>> to return to the main menu
- <<Slct>> (select) to read more details; see section 10.3
- <<Rset>> to reset the service item; see section 10.4

10.3 Calling up running hours and service level

1. Call up the related service item. See section 10.2.
2. Press the key <<Slct>> (select) to get the running hours and service level (see Fig. 10.2): the related service timer has counted for 2050 running hours since previous filter change. The programmed lifetime is <<2000>> running hours; as a consequence, the filter must be replaced and the service message reset as described in section 10.4.

Running hours			
Hrs		2050	HNF 7701
Serv	Max	2000	P81
**	Rtrn	** Rset	REVO
F1	F2	F3	

Fig. 10.2 Example of a service display

The bottom line again shows the available function keys, i.e.:
- <<Rtrn>> (return) to return to the message whether service is required or not
- <<Rset>> (reset) to reset the service item; see section 10.4

10.4 Service reset

To reset the service timer:
1. If the air filter is indicated: stop the compressor, wait until the compressor has stopped and replace the element.
2. If the oil, oil separator or oil filter is indicated: stop the compressor, wait until the compressor has stopped, unscrew the oil filler plug one turn to depressurize the receiver and change the oil or replace the component as the case may be.
3. Call up the service menu for the related component as described above.
4. Press the key <<Rset>> (reset): the timer is reset to 0. The regulator will ask for confirmation (Yes) or cancelling (No).

Note
Each service item must be reset individually.

11 TEST SUBMENU: Display test

11.1 Function

To carry out a display test, i.e. to check whether the display and LEDs are still intact.

11.2 Procedure

1. Activate the main menu by pressing the key <<Menu>> (5-Fig. 2.1).
2. Scroll through the options by using the keys (6-Fig. 2.1) until the option <<Test>> is shown on the second line of the display.
3. Press the key <<Slct>> (select) (5-Fig. 2.1).

   The display shows the option <<Display>>. Press the key <<Slct>>.
   During testing, the regulator will generate a series of patterns on the display which enable the operator to check that each pixel still functions normally; at the same time the LEDs are lit.

4. Press the key <<Menu>> to return to the submenu.

12 MODIFY SETTINGS SUBMENU: Modifying settings for regulation, protection and service

12.1 Function

To modify a number of programmable parameters, including:

1 **Regulation settings:**
- Unloading pressure
- Loading pressure
- Motor running time in star
- Load delay time
- Number of motor starts/hour
- Minimum stop time (i.e. the time period during which the compressor, if stopped automatically, remains stopped whatever happens with the air net pressure)
- Required stop period (the compressor will not be stopped automatically by the regulator unless a standstill period equal to the sum of the minimum stop time and required stop period is expected)
- Power recovery time (if automatic restart after voltage failure is activated) 1)
- General permissive start time (not used for these GA compressors)

2 **Protection settings:**
- Shut-down level for the compressor element outlet temperature
- Shut-down warning level for the compressor element outlet temperature
- Delay time for signal (i.e. the time period during which the shut-down signal must exist before the compressor is shut down)

For GA Full-feature (integrated air dryer) **also:**
- Dewpoint warning level **(not for GA5 up to GA45 FF and GA55C FF)**
- Delay time for signal (i.e. the time period during which the warning signal must exist before the warning message appears)
- Delay time at starting (i.e. the time period during which the warning signal is ignored after starting to allow the dryer to reach the dewpoint temperature)

On water-cooled GA55-75 compressors also:
- Warning level for the cooling water outlet temperature
- Delay time for signal (i.e. the time period during which the warning signal must exist before generating the warning)
- Delay time at start (i.e. the time period after starting which must expire before generating a warning)

3 **Service settings:**
Service level for the:
- Oil
- Oil filter
- Air filter
- Oil separator

12.2 Procedure

HNF 7701
P 82
REV 0

1. Activate the main menu by pressing the key <<Menu>> (5-Fig. 2.1).
2. Scroll through the available options by using the scroll keys (6-Fig. 2.1) until the option <<Modify Settings>> is shown on the second line of the display.
3. Press the key <<Slct>> (select) (5-Fig. 2.1).

   A submenu is started, allowing the operator to select between following options:
   - Regulation
   - Protections
   - Service
4. Scroll through the options by using the scroll keys (6-Fig. 2.1) until the desired option is shown on the display.
5. Press the key <<Slct>> (select).

12.3 Modifying compressor regulation settings

1. Call up the modify settings submenu and select the option <<regulation>>. See section 12.2.
2. The first option (i.e. unloading pressure) of a list of programmable parameters is shown. Use the scroll keys (6-Fig. 2.1) to select the parameter to be modified.
3. For each parameter, the screen and modifying procedure are similar to the example below.

12.3.1 Modifying the loading pressure

1. Consult sections 12.1 up to 12.3 for selecting the option <<loading pressure>>.
2. When selecting the loading pressure, a display similar to that shown in Fig. 12.1 will appear:

Loading press			↑
bar		6.6	
			↓
Menu	Mod		
F1	F2	F3	

Fig. 12.1 Example of a modifying screen (regulation settings)

The example in Fig. 12.1 indicates:
- On line 1 the related parameter, i.e. <<Loading pressure>>
- On line 2 the unit and the actual value, i.e. <<bar 6.6>>
- On the bottom line the available selections, i.e. <<Menu>> to return to the submenu and <<Mod>> to modify the parameter.

3. After pressing the key <<Mod>> (modify) the value of the parameter starts blinking and the functions of the keys (5-Fig. 2.1) change into:

   F1 <<Prog>> (program)
   F2 <<Lim>> (limitations)
   F3 <<Canc>> (cancel)

Loading press		
bar		"7.0"
Prog	Lim	Canc
F1	F2	F3

Fig. 12.2 Example of a modifying screen (regulation settings)

4. Modify the value by means of the scroll keys (6-Fig. 2.1). Figures 12.1 and 12.2 show the displays when changing the loading pressure from 6.6 bar into 7.0 bar.
5. Press the key <<Prog>> to program the new value or the key <<Canc>> to cancel the modification operation (the original value will be retained).

Notes
The regulator will not accept new values beyond the limitations. See section 18.
It is possible to check the limitations which are valid for the parameter to be modified by selecting <<Lim>> (limits). A typical example is shown in Fig. 12.3.

Prog limits		
min	4.0	
max	7.4	
	Rtrn	
F1	F2	F3

Fig. 12.3 Example of a modifying screen (regulation settings)

12.4 Modifying protection settings

1. Call up the modify settings submenu and select the option <<protections>>. See section 12.2. A screen as shown in Fig. 12.4 appears.

Element outlet		
Temperature		↓
Menu	Slct	
F1	F2	F3

Fig. 12.4 Example of a modifying screen (protection settings)

Note:
On Full-feature compressors with integrated air dryer, a second option, i.e. dewpoint, can be selected. See section 12.4.2.
On water-cooled GA55-75 compressors, a second option, i.e. cooling water outlet temperature, can be selected. See section 12.4.3.

12.4.1 Element outlet temperature

2. Press the key <<Slct>> (select): a screen similar to the one shown below appears (Fig. 12.5):

Element outlet			Itaf 7701
Shd	Max	110	PSS
C		85	REVO ↓
Menu	Mod		
F1	F2	F3	

Fig. 12.5 Example of a modifying screen (protection settings)

The example in Fig. 12.5 indicates:
- On line 1, the name of the sensor (Compressor <<Element outlet>>)
- On line 2, the type of parameter (<<Shd>> or shut-down), the level type (<<Max>> or maximum level) and the actual programmed value (<<110>>)
- On line 3, the unit (<<C>>) and the actual measured value (<<85>>)

3. To modify the shut-down level, press the key <<Mod>> (modify) and then use the scroll keys (6-Fig. 2.1).
4. Use the key <<Prog>> to program the new value or the key <<Canc>> to cancel the modification operation (the original value will be retained).

Notes
The regulator will not accept new values beyond the limitations. See section 18.
It is possible to check the limitations which are valid for the parameter to be modified by selecting <<Lim>> (limits).

5. The arrow on the modifying screen (Fig. 12.5) indicates to use the scroll key ↓ (6-Fig. 2.1) to show the relevant shut-down warning (<<Shdw>>) value (e.g. <<100>> degrees celsius); see Fig. 12.6.

Element outlet			↑
Shdw	Max	100	
C		85	↓
Menu	Mod		
F1	F2	F3	

Fig. 12.6 Example of a modifying screen (protection settings)

6. To modify the shut-down warning level, press the key <<Mod>> (modify) and then use the scroll keys (6-Fig. 2.1).
7. Use the key <<Prog>> to program the new value or the key <<Canc>> to cancel the modification operation (the original value will be retained).
8. The arrow ↓ on the screen (Fig. 12.6) indicates to use the scroll key ↓ (6-Fig. 2.1) to show the programmed delay for the shut-down; see Fig. 12.7.

Element outlet			↑
Delay at signal			
sec		0	
Menu	Mod		
F1	F2	F3	

Fig. 12.7 Example of a modifying screen (protection settings)

The example in Fig. 12.7 indicates:
- On line 1, the name of the sensor (Compressor <<Element outlet>>)
- On line 2, the type of parameter (<<Delay at>> shut-down <<signal>>)
- On line 3, the unit (<<sec>>) and the actual value (<<0>>)

9. If it should be necessary to modify the nominal setting of 0 seconds, first consult section 18 before pressing the key <<Mod>> (modify) and then using the scroll keys (6-Fig. 2.1) for modifying.
10. Use the key <<Prog>> to program the new value or the key <<Canc>> to cancel the modification operation (the original value will be retained).

12.4.2 Dewpoint temperature

For GA Full-feature (compressor with integrated air dryer), a downward pointing arrow appears on the third line of the screen (Fig. 12.4) indicating that a second option, i.e. dewpoint temperature, can be selected:

1. Press the scroll key ↓ (6-Fig. 2.1). Following screen appears:

Dewpoint Temperature			↑
Menu	Slct		
F1	F2	F3	

Fig. 12.8 Example of a modifying screen (protection settings)

2. Select the option by pressing the key <<Slct>> (select).
3. **On GA5 up to GA45 FF and GA55C FF**, the warning level for high dewpoint depends on the ambient temperature and is not programmable, a screen as shown in (Fig. 12.10) appears. **On GA55-75-90C FF**, a screen similar to the one shown in (Fig. 12.9) appears:

Dewpoint Warn	Max	25	
C		4	↓
Menu	Mod		
F1	F2	F3	

Fig. 12.9 Example of a modifying screen (protection settings)

The example in Fig. 12.9 indicates:
- On line 1, the name of the sensor (<<Dewpoint>>)
- On line 2, the type of parameter (<<Warn>> or warning), the level type (<<Max>> or maximum level) and the actual programmed value (<<25>>)
- On line 3, the unit (<<C>>) and the actual measured value (<<4>>)

4. Modifying is carried out in a similar way as described in steps 3 and 4 of section 12.4.1.
5. The arrow on the modifying screen (Fig. 12.9) indicates to use the scroll key ↓ (6-Fig. 2.1) to show the relevant delay at signal (i.e. the time period during which the warning signal must exist before the warning message appears (e.g. <<3 sec>>). See Fig. 12.10.

Dewpoint Delay at signal			↑
sec		3	↓
Menu	Mod		
F1	F2	F3	

Fig. 12.10 Example of a modifying screen (protection settings)

6. Modifying is carried out in a similar way as described in steps 3 and 4 of section 12.4.1.
7. The arrow ↓ on the modifying screen (Fig. 12.10) indicates to use the scroll key ↓ (6-Fig. 2.1) to show the delay at start (i.e. the time period during which the warning signal is ignored after starting to allow the dryer to reach the dewpoint temperature); see Fig. 12.11.

Dewpoint Delay at start			↑
sec		255	
Menu	Mod		
F1	F2	F3	

Fig. 12.11 Example of a modifying screen (protection settings)

The example in Fig. 12.11 indicates:
- On line 1, the name of the sensor (<<Dewpoint>>)
- On line 2, the type of parameter (<<Delay at start>>)
- On line 3, the unit (<<sec>>) and the actual value (<<255>>)

8. Modifying is carried out in a similar way as described in steps 3 and 4 of section 12.4.1.
9. Use the key <<Menu>> and the key ↑ to return to the initial screen as shown in Fig. 2.1.

12.4.3 Cooling water outlet temperature

For water-cooled GA55-75 compressors, a downwards pointing arrow appears on the third line of the screen (Fig. 2.1) indicating that a second option, i.e. cooling water outlet temperature can be selected:

1. After pressing the arrow key on the screen shown in Fig. 12.4, a screen similar to that in Fig. 12.12 is shown:

Cool water out Temperature			↑
Menu	Slct		
F1	F2	F3	

Fig. 12.12 Example of a modifying screen (protection settings)

2. Press the key <<Slct>> (select): a screen similar to the one shown below appears (Fig. 12.13).

Cool water out			
Warn	Max	60	
C		45	↓
Menu	Mod		
F1	F2	F3	

Fig. 12.13 Example of a modifying screen (protection settings)

The example in Fig. 12.13 indicates:
- On line 1, the name of the sensor (<<cool water out>>)
- On line 2, the type of parameter (<<warn>>) and the programmed maximum (<<Max. 60>>)
- On line 3, the unit and actual value (<<45>>)

3. To modify the warning level, press the key <<Mod>> (modify) and use the scroll keys (6-Fig. 2.1).
4. Use the key <<Prog>> to program the new value or the key <<Canc>> to cancel the modification (the original value will be retained).

Notes
The regulator will not accept new values beyond the limitations. See section 18. It is possible to check the limitations by selecting <<Lim>> (limits).

5. The arrow on the screen (Fig. 12.13) indicates to use the scroll key ↓ (6-Fig. 2.1) to show the programmed delay for the warning signal; see Fig. 12.14.

Cool water out			
Delay at signal			
sec		0	↓
Menu	Mod		
F1	F2	F3	

Fig. 12.14 Example of a modifying screen (protection settings)

6. If necessary, use the key <<Mod>> and the scroll keys for modifying.
7. Use the key <<Prog>> to program the new value or the key <<Canc>> to cancel the operation (the original value will be retained). See also step 4.
8. The arrow on the screen (Fig. 12.14) indicates to use the scroll key ↓ (6-Fig. 2.1) to show the programmed delay during start; see Fig. 12.15.

Cool water out			↑
Delay at start			
sec		0	
Menu	Mod		
F1	F2	F3	

Fig. 12.15 Example of a modifying screen (protection settings)

9. Consult steps 6 and 7 if modifying is desired.

12.5 Modifying service settings

HNF 7701
P85
REVD

1. Call up the modify settings submenu and select the option <<service settings>>. See section 12.2.
2. The first option of a list of programmable service settings is shown. See section 12.1 for the list of all programmable parameters. Use the scroll keys (6-Fig. 2.1) to select the parameter to be modified, e.g. oil lifetime (Fig. 12.16).

Oil lifetime			↓
Menu	Slct		
F1	F2	F3	

Fig. 12.16 Example of a modifying screen (service settings)

3. Select the parameter to be modified by pressing the key <<Slct>> (select). If selecting the oil lifetime, a screen similar to the one in Fig. 12.17 appears:

Running hours		
Serv	Max	4000
Hrs		477
Menu	Mod	
F1	F2	F3

Fig. 12.17 Example of a modifying screen (service settings)

4. To modify the setting of the running hours, press the key <<Mod>> (modify) and then use the scroll keys (6-Fig. 2.1).
5. Use the key <<Prog>> to program the new value or the key <<Canc>> to cancel the modification operation (the original value will be retained).

Notes
- The regulator will not accept new values beyond the limitations. See section 18.
- It is possible to check the limitations which are valid for the parameter to be modified by selecting <<Lim>> (limits).

Footnotes chapter 12

1) If required, the automatic restart function after voltage failure can be activated by Atlas Copco. **The power recovery time** (the period within which the voltage must be restored to have an automatic restart) **can be set between 1 and 254 seconds or to symbol 00!. If the power recovery time is set to 00!, the compressor will always restart after a voltage failure, no matter how long it takes to restore the voltage.** Provide a label near to the control panel warning the operator that the compressor automatically restarts if the voltage is restored.

13 TIMER SUBMENU: Programming compressor start/stop commands

13.1 Function

To program up to 56 start/stop commands for the compressor.

13.2 Procedure

1. Activate the main menu by pressing the key <<Menu>> (5-Fig. 2.1).
2. Scroll through the available options by using the scroll keys (6-Fig. 2.1) until the option <<Timer>> is shown on the second line of the display.
3. Press the key <<Slct>> (select) (5-Fig. 2.1).
4. Initially, the list with start/stop commands is empty, hence the timer function is switched off (<<Timer inactive>>). Following screen appears:

Timer not activated		
		List
F1	F2	F3

Fig. 13.1 Timer screen

13.2.1 To program start/stop commands

1. Press the key <<List>>. The display will show a message that the list is empty (<<No items>>). The bottom line will now include the key <<Mod>> (modify).
2. Press the keys <<Mod>> and then <<Add>>. The command <<MON 00:00 stop>> will be shown.
3. Using the scroll keys (6-Fig. 2.1), modify this command as required, as described in section 13.2.4. Add and delete commands as required, as described in sections 13.2.5 and 13.2.6.
4. Activate the timer as described in section 13.2.2.

13.2.2 To activate/deactivate the timer

1. **The timer can only be activated if at least one start/stop command is programmed.**
2. Select the menu <<Timer>>. Press the key <<Mod>> (modify); the message <<Timer not activated>> will blink.
3. Use the scroll keys (6-Fig. 2.1) to change the message into <<Timer active>>.
4. Press the key <<Prog>> (program) to program the Timer active function or key <<Canc>> to cancel the modify operation. If activated, the regulator will execute the programmed commands.
5. **The timer can be deactivated again. In this case, the programmed start/stop commands will not be executed (but remain in the memory of the regulator).**

HNF 7701
P86
REVO

13.2.3 To display the list of commands

1. Press the key <<List>> on the timer screen. A typical display is shown in Fig. 13.2.

Mon	06:00 start		↑
Mon	17:00 stop		←
Tue	07:00 start		↓
Menu	Mod		
F1	F2	F3	

Fig. 13.2 Example of start/stop command screen

The vertical arrows at the right-hand side indicate to use the vertical scroll keys to select the next and previous start/stop commands. The horizontal arrow indicates the command which is accessible at that moment.

2. Use the key <<Menu>> to return to the submenu or the key <<Mod>> to modify the start/stop commands.
3. After pressing the key <<Mod>>, three selections are shown on the bottom line of the display (Fig. 13.3):

Mon	06:00 start		↑
Mon	17:00 stop		←
Tue	07:00 start		↓
Mod	Add	Del	
F1	F2	F3	

Fig. 13.3 Example of start/stop command screen

4. Use:
   - <<Mod>> to modify the command indicated by the horizontal arrow
   - <<Add>> to add a new command at the location of the horizontal arrow
   - <<Del>> to delete start/stop commands

13.2.4 To modify a command

1. Suppose the command <<Mon 17:00 stop>> is to be modified, i.e. stopping at 18 o'clock instead of 17 o'clock.
2. Press the key <<List>> and scroll through the compressor start/stop commands until the command to be modified is indicated by the horizontal arrow on the screen. Press the key <<Mod>>. Press the key <<Mod>> again. The day indication will blink (Fig. 13.4). The day can be modified using the scroll keys (6-Fig. 2.1).
3. Press the tabulator key (7-Fig. 2.1) to go to the next field to be modified (the hour indication). See Fig. 13.5. Modify using keys (6).
4. Proceed in the same way to modify, if necessary, the minutes

indication and the start/stop indication. See Figs. 13.6 and 13.7.

5. Press the key <<Prog>> (program) to program the new command or the key <<Canc>> (cancel) to quit without reprogramming.
6. The regulator will ask if it is desired to change more commands.

	06:00 start	
"Mon"	17:00 stop	
	07:00 start	
Prog	Canc	
F1	F2	F3

Fig. 13.4 Programming the day

Mon	start	
Mon	"18" stop	
Tue	start	
Prog	Canc	
F1	F2	F3

Fig. 13.5 Programming the hours

Mon	start	
Mon	"00" stop	
Tue	start	
Prog	Canc	
F1	F2	F3

Fig. 13.6 Programming the minutes

Mon	06:00	
Mon	18:00 "stop"	
Tue	07:00	
Prog	Canc	
F1	F2	F3

Fig. 13.7 Programming the start/stop mode

Important:
It is necessary to program the start/stop commands in successive order timewise. Program the commands from Monday till Sunday, e.g.:
Monday 07.30 start
Monday 18.00 stop
Tuesday 08.00 start
Tuesday 17.00 stop
etc.

The regulator does not accept a new compressor start/stop command unless it is situated between the next and previous start/stop command timewise. If not, the new command is not accepted and the command line remains blinking. In this case, either modify the command or use the key <<Canc>> (cancel) to quit the modification operation.

Make sure that the timer function is activated (<<Timer active>>). If not, the programmed start/stop commands will not be executed.

13.2.5 To add a command

1. Press the key <<List>> and scroll through the commands until the command after which a new command is to be added appears, followed by a horizontal arrow.
2. Press the keys <<Mod>> (modify) and <<Add>>. 1) The command which was indicated by the horizontal arrow will be copied and the day indication of the copied command will blink.
3. The way of modifying this command is similar to the description in section 13.2.4.
4. The regulator will ask if it is desired to change more commands.

13.2.6 To delete a command

1. Press the key <<List>> and scroll through the commands until the command to be deleted appears, followed by a horizontal arrow.
2. Press the keys <<Mod>> (modify) and <<Del>> (delete). 1) The bottom line of the screen shows following selections:
   <<All>> to delete all commands
   <<This>> to delete the command indicated by the horizontal arrow
   <<Canc>> (cancel) if the delete selection must not be carried out
3. When selecting <<All>>, the regulator will ask <<Are you sure to delete all commands?>> By pressing the key <<Yes>> all commands are deleted.
4. The regulator will ask if it is desired to change more commands. If so, press the keys <<Yes>> and<< Add>>.

Footnotes chapter 13

1) If the key <<Yes>> was pressed at the question <<Do you want to change another command>>, the display will include the options <<Add>> and <<Del>> (delete). In this case, one of these keys can be pressed without using the key <<Mod>> (modify) first.

14 CONFIGURATION SUBMENU: Reprogramming time, date, display language, units, motor start mode and date format

14.1 Function

To reprogram a number of parameters. These parameters are:
- Time
- Date
- Language on display (two languages are provided)
- Auto restart 1)
- Unit for pressure (bar, psi or kg/cm²)
- Unit for temperature (C or F)
- Motor start mode (star-delta or direct-on-line)
- Format of date (day/month/year or month/day/year or year/month/day)

Only on GA5 up to GA45 FF and GA55C FF:
- Dewpoint display mode (status or value)
- Dryer protection mode (warning or shut-down)

On GA55-75-90C also:
- Starts/day or starts/hour

14.2 Procedure

1. Activate the main menu by pressing the function key <<Menu>> (5-Fig. 2.1).
2. Scroll through the available options by using the scroll keys (6-Fig. 2.1) until the option <<Configuration>> is shown on the second line of the display.
3. Press the key <<Slct>> (select) (5-Fig. 2.1).
4. The first option shown is <<Time>>. If another option is desired, scroll through the display (using scroll keys 6-Fig. 2.1) and select (using key <<Slct>>).
5. In case of option <<Time>>, the second line on the screen indicates the actual setting, e.g. 14:30.
6. If it is desired to modify the time, press function key <<Mod>> (modify) (5-Fig. 2.1). If not, press key <<Menu>> to return to the submenu.
7. After pressing the key <<Mod>> (modify), the first field (i.e. 14) will blink. Modify the hours using the scroll keys (6-Fig. 2.1). Then press the tabulator key (7-Fig. 2.1) to go to the next field (i.e. 30). The setting of this field can now be modified with the scroll keys.
8. The bottom line of the display will show two options:
   - <<Prog>> to program the new setting
   - <<Canc>> to cancel the new setting
9. Proceed in the same way for the other parameters to be modified. Use the scroll keys (6-Fig. 2.1) to modify the parameter.

Note
For most settings only one reprogrammable field is used; in this case the tabulator key (7-Fig. 2.1) to jump from one field to the other one is not needed.

Footnotes chapter 14

1) To be activated by Atlas Copco only

15 SAVED DATA SUBMENU: Calling up compressor data saved by regulator

15.1 Function

To call up the compressor data saved by the electronic regulator. These data are:
- Last shut-down data (indicated <<Last shutdown 1>>)
- Last emergency stop data (indicated <<Last Em stop 1>>)
- Longest load data (time, date, duration and other data reflecting the condition of that moment)
- Longest unload data (time, date, duration and other data reflecting the condition of that moment)

15.2 Procedure

1. Activate the main menu by pressing the key <<Menu>> (5-Fig. 2.1).
2. Scroll through the available options by using the scroll keys (6-Fig. 2.1) until the option <<Saved data>> is shown on the second line of the display.
3. Press the key <<Slct>> (select) (5-Fig. 2.1).
4. The first option is shown (i.e. <<Last shutdown 1>>). Scroll through the available options by using the scroll keys (6-Fig. 2.1) until the desired option is shown on the second line of the display.
5. Press the key <<Slct>> (select) (5-Fig. 2.1).
6. If desired, repeat steps 4 and 5 to look at the other options.

15.2.1 Example of the last shut-down data

1. Select option <<Last shut-down data 1>>. Following screen may appear:

Motor overload Shd Not normal Menu	NC		↓
F1	F2	F3	

Fig. 15.1 Example of a saved data screen

The display (Fig. 15.1) indicates:
- The last shut-down (<<Shd>>) was a <<motor overload>>
- The contacts of the overload relay are normally closed (<<NC>>)
- The contacts were <<not normal>>, i.e. open due to overcurrent
- On the bottom line the key <<Menu>> to return to the submenu

2. By using the scroll key ↓ (6-Fig. 2.1) following data are

shown (the data reflect the condition of the compressor at the moment of shut-down):
- Time
- Date
- Duration of longest load or unload period (if these data are selected)
- Number of running hours
- Number of loading hours
- Number of motor starts
- Outlet pressure
- Compressor element outlet temperature
- Condition of the motor overload function

3. Press the key <<Menu>> to return to the submenu and select another option, e.g. <<Last shutdown 2>> (i.e. the last shut-down but one) to consult the last shut-down data but one. Following screen may appear (Fig. 15.2):

Element outlet			
Shd		110	
C		110	↓
Menu			
F1	F2	F3	

Fig. 15.2 Example of a saved data screen

The display (Fig. 15.2) indicates:
- The shut-down (<<Shd>>) was due to too high a compressor <<element outlet>> temperature
- The shut-down value is programmed at 110 degrees celsius (<<Shd 110>>)
- The temperature increased to <<110>> degrees celsius
- On the bottom line the key <<Menu>> to return to the submenu

By using the scroll key ↓ (6-Fig. 2.1), other data related to the shut-down can be called up.

16 MORE FUNCTION: Quick look at actual compressor status

16.1 Function

To have a quick look at:
- The control status of the compressor, i.e. automatic or manual control, local or remote control, start/stop timer on or off
- The maximum allowable unloading pressure
- The actual outlet pressure
- The actual temperature at the compressor element outlet
- The dewpoint (on Full-feature compressors)
- The status of the motor overload protection
- The running and loading hours

On GA55-75-90C also:
- The pressure difference over the oil separator
- The status of the fan motor overload protection
- **On water-cooled compressors also:** the actual cooling water outlet temperature

16.2 Procedure

1. If necessary, activate the main display. See section 4.2.
2. Press the key <<More>>. A screen similar to Fig. 16.1 appears:

Auto operation		
Local control		
Timer active		
Menu	More	Unld
F1	F2	F3

Fig. 16.1 Example of a more display

<<Line 1>> indicates the automatic or manual operation status of the regulator.
<<Auto operation>> means that the regulator automatically adapts the operation of the compressor, i.e. loading, unloading, stopping and automatic restarting according to the programmed parameters.
<<Man operation>> means that the automatic pressure control function of the regulator is interrupted after manual intervention through the function keys on the keyboard (see section 17).

Line 2 indicates whether the regulator operates in local control or remote control mode.
<<Local control>> means that the start/stop and load/unload buttons on the keyboard are activated.
<<Remote control>> means that these functions are controlled remotely. Consult Atlas Copco.

Line 3 indicates whether the timer which generates time-based start and stop commands is activated or not. See section 13.

3. Press the key <<More>> again: the next screen shows the max. pressure, i.e. the max. allowable unloading pressure.
4. Press the key <<More>> to get following information (the data reflect the actual condition of the compressor):
   - The delivery air pressure
   - The element outlet temperature
   - Dewpoint (only on Full-feature compressors)
   - The status of the motor overload function
   - The number of running hours
   - The number of loading hours

   On GA55-75-90C also
   - The pressure difference over the oil separator
   - The status of the fan motor overload protection
   - **On water-cooled compressors also:** the actual cooling water outlet temperature
5. The last item shown is always the loading hours.

HNF 7701
P90
REJO

17 MANUALLY LOADING/ UNLOADING

17.1 Function

To load and unload the compressor manually.

Normally, the compressor is running in automatic operation, i.e. the electronic regulator loads, unloads, stops and restarts the compressor automatically. LED (1-Fig. 2.1) is then alight.

If required, the compressor can be unloaded manually. In this case, the compressor is switched out of automatic operation, i.e. the compressor remains running unloaded unless it is loaded again manually.

17.2 Manually unloading

1. If necessary, activate the main display. See section 4.2.
2. Press the key <<Unld>> (unload) (5-Fig. 2.1). LED (1-Fig. 2.1) goes out. The message <<Manual Unloaded>> appears on the display.

17.3 Manually loading

1. If necessary, activate the main display. See section 4.2.
2. Press the key <<Load>> (5-Fig. 2.1). LED (1-Fig. 2.1) lights up. Note that the command <<Load>> does not force the compressor in loaded condition, but it will switch the compressor to automatic operation again, i.e. the compressor will be loaded if required by the air net pressure.

18 PROGRAMMABLE SETTINGS

18.1 Regulation settings

		Minimum	Nominal	Maximum
Motor running time in star	sec	5	10	10
Load delay time	sec	0	0	10
Number of motor starts for GA11 up to -22	starts/hr	0	10	30
Number of motor starts others	starts/hr	0	10	10
Minimum stop time	sec	1)	20	30
Required stop period 2)	sec	0	20	60
Permissive start period 10)	sec	0	20	60
Power recovery time	sec	1	3	12)

		Minimum	Nominal	Maximum
Unloading pressure 3)				
13 bar Pack	bar(e)	4.1	12.5	13
13 bar Full-feature	bar(e)	4.1	12.5	12.7
10 bar Pack	bar(e)	4.1	9.5	10
10 bar Full-feature	bar(e)	4.1	9.5	9.7
7.5 bar Pack	bar(e)	4.1	7	7.5
7.5 bar Full-feature	bar(e)	4.1	7	7.2
100 psi Pack	bar(e)	4.1	6.9	7.4
100 psi Full-feature	bar(e)	4.1	6.9	7.1
125 psi Pack	bar(e)	4.1	8.6	9.1
125 psi Full-feature	bar(e)	4.1	8.6	8.8
150 psi Pack	bar(e)	4.1	10.3	10.8
150 psi Full-feature	bar(e)	4.1	10.3	10.5
175 psi Pack	bar(e)	4.1	12	12.5
175 psi Full-feature	bar(e)	4.1	12	12.2
Loading pressure 3)				
13 bar Pack	bar(e)	4	11.9	12.9
13 bar Full-feature	bar(e)	4	11.9	12.6
10 bar Pack	bar(e)	4	8.9	9.9
10 bar Full-feature	bar(e)	4	8.9	9.6
7.5 bar Pack	bar(e)	4	6.4	7.4
7.5 bar Full-feature	bar(e)	4	6.4	7.1
100 psi Pack	bar(e)	4	6.3	7.3
100 psi Full-feature	bar(e)	4	6.3	7
125 psi Pack	bar(e)	4	8	9
125 psi Full-feature	bar(e)	4	8	8.7
150 psi Pack	bar(e)	4	9.7	10.7
150 psi Full-feature	bar(e)	4	9.7	10.4
175 psi Pack	bar(e)	4	11.4	12.4
175 psi Full-feature	bar(e)	4	11.4	12.1

18.2 Protection settings

		Minimum	Nominal	Maximum
Compressor element outlet temperature 4) (shut-down warning level)	celsius	9)	100	109
Compressor element outlet temperature 4) (shut-down level)	celsius	101	110	120
Delay at shut-down signal for GA55-75-90C 11)	sec	0	0	7
For Full-feature also 13):				
Dewpoint warning temperature for GA55-75-90C 16)	celsius	3	25	50
Delay at signal 6)	sec	0	3	10
Delay at starting 14)	sec	0	255	255
On water-cooled GA55-75 compressors also:				
Cooling water outlet temperature (warning level)	celsius	0	60	99
Delay at warning signal 6)	sec	0	0	255
Delay at start 15)	sec	0	0	255

18.3 Service settings

HNF 7701
P92 REVO

		Minimum	Nominal	Maximum
Oil filter lifetime (running hours)	hr	0	4000	5)
Oil lifetime (running hours)	hr	0	4000	7)
Air filter (running hours)	hr	0	4000	
Oil separator (running hours) **for GA5 up to -10**	hr	0	4000	
Oil separator (running hours) **for GA11 up to -90C**	hr	0	8000	
Oil separator (pressure difference) **for GA55-75-90C**	bar	0	1	8)
Oil separator (delay at signal) **for GA55-75-90C 6)**	sec	0	10	20

Footnotes chapter 18

1) Once the compressor is automatically stopped, it will remain stopped for the **minimum stop time**, whatever happens with the air net pressure. It is recommended to program this setting at minimum 20 seconds to prevent too-short stopping periods. If a lower setting should be required, consult Atlas Copco.
2) In automatic operation, the compressor will not be stopped by the regulator until a standstill period of at least the sum of the **minimum stop time** and **required stop period** is expected. However, if the decrease in air ~~net~~ system pressure should require a new start of the compressor, the regulator will start the compressor after the **minimum stop time.**
3) The regulator does not accept illogical settings, e.g. if the unloading pressure is programmed at 7.0 bar(e), the maximum limit for the loading pressure changes into 6.9 bar(e). The recommended minimum pressure difference between loading and unloading is 0.6 bar.
4) The regulator does not accept illogical settings, e.g. if the warning level is programmed at 95 degrees celsius, the minimum limit for the shut-down level changes into 96 degrees celsius. The recommended difference between the warning level and shut-down level is 10 degrees celsius.
5) Use Atlas Copco oil filters. This interval is valid when using the recommended Atlas Copco Roto-injectfluid.
6) Is the time period during which the warning signal must exist before the warning message appears.
7) This interval is valid when using the recommended Atlas Copco Roto-injectfluid.
8) The recommended change interval is 8000 running hours or if exceeding 1 bar pressure drop over separator.
9) Recommended minimum setting: 70 degrees celsius. For testing the temperature sensor, this setting can be decreased to 50 degrees celsius. Reset the setting value after testing.
10) Is the period during which the start conditions are checked.
11) This is the period during which the signal must exist before the compressor is shut down. It is strongly recommended to program this time at 0 seconds. If it should be required to program this setting at another value (e.g. to deal with transient high temperatures when using an energy recovery system), consult Atlas Copco.
12) Is only accessible if the automatic restart is activated. **The power recovery time** (the period within which the voltage must be restored to have an automatic restart) **can be set between 1 and 254 seconds or to symbol 00!. If the power recovery time is set to 00!, the compressor will always restart after a voltage failure, no matter how long it takes to restore the voltage. To activate the automatic restart function, consult Atlas Copco.**
13) Full-feature version is the Pack version with integrated air dryer.
14) Is the time period during which the warning signal is ignored after starting to allow the dryer to reach the dewpoint temperature.
15) Is the period after starting which must expire before generating a warning. This setting should be less than the setting for delay at signal.
16) See also sections 12.4.2 and 14.

Notes:

HNF 7701

P93 REVD

Notes:

HMF 7701
PG4
REV0

Notes:

HMF 7701

P95
REVD

HNF 7701
p 96
REV 0

SAFETY PRECAUTIONS (continued)

the unit to contain air above atmospheric pressure shall be protected by a pressure-relieving device or devices as required.

13. Pipework or other parts with a temperature in excess of 80 degrees celsius and which may be accidentally touched by personnel in normal operation shall be guarded or insulated. Other high-temperature pipework shall be clearly marked.
14. If the ground is not level or can be subject to variable inclination, consult Atlas Copco.
15. The electrical connections shall correspond to the local codes. The units shall be grounded and protected against short circuits by fuses.

Operation

1. Air hoses shall be of correct size and suitable for the working pressure. Never use frayed, damaged or deteriorated hoses. Use only the correct type and size of hose end fittings and connections. When blowing through a hose or air line, ensure that the open end is held securely. A free end will whip and may cause injury. Make sure that a hose is fully depressurized before disconnecting it.

   Never play with compressed air. Do not apply it to your skin or direct an air stream at people. Never use it to clean dirt from your clothes. When using it to clean equipment, do so with extreme caution and use eye protection.
2. The compressor is not considered as capable of producing air of breathing quality. For breathing air quality, the compressed air must be adequately purified according to local legislation and standards.
3. Never operate the unit when there is a possibility of taking in flammable or toxic fumes.
4. Never operate the unit at pressures below or in excess of its limit ratings as indicated on the Principal Data sheet.
5. Keep all bodywork doors shut during operation. The doors may be opened for short periods only, e.g. to carry out checks. Wear ear protectors when opening a door.
6. People staying in environments or rooms where the sound pressure level reaches or exceeds 90 dB(A) shall wear ear protectors.
7. Periodically check that:
   a. All guards are in place and securely fastened
   b. All hoses and/or pipes inside the unit are in good condition, secure and not rubbing
   c. There are no leaks
   d. All fasteners are tight
   e. All electrical leads are secure and in good order
   f. Safety valves and other pressure-relief devices are not obstructed by dirt or paint
   g. Air outlet valve and air net, i.e. pipes, couplings, manifolds, valves, hoses, etc. are in good repair, free of wear or abuse
8. If warm cooling air from compressors is used in air heating systems, e.g. to warm up a workroom, take precautions against air pollution and possible contamination of the breathing air.
9. Do not remove any of, or tamper with, the sound-damping material.

Maintenance

Maintenance and repair work shall only be carried out under supervision of someone qualified for the job.

1. Use only the correct tools for maintenance and repair work.
2. Use only genuine spare parts.
3. All maintenance work, other than routine attention, shall only be undertaken when the unit is stopped, the main power supply is switched off and the machine has cooled down. Take positive precaution to ensure that the unit cannot be started inadvertently.

   In addition, a warning sign bearing a legend such as "**work in progress; do not start**" shall be attached to the starting equipment.
4. Before removing any pressurized component, effectively isolate the unit from all sources of pressure and relieve the entire system of pressure.
5. Never use flammable solvents or carbon tetrachloride for cleaning parts. Take safety precautions against toxic vapours of cleaning liquids.
6. Scrupulously observe cleanliness during maintenance and repair. Keep dirt away by covering the parts and exposed openings with a clean cloth, paper or tape.
7. Never weld or perform any operation involving heat near the oil system. Oil tanks must be completely purged, e.g. by steam-cleaning, before carrying out such operations.

   Never weld on, or in any way modify, pressure vessels.

   Whenever there is an indication or any suspicion that an internal part of a machine is overheated, the machine shall be stopped but **no inspection covers shall be opened** before sufficient cooling time has elapsed; this to avoid the risk of spontaneous ignition of the oil vapour when air is admitted.

   Never use a light source with open flame for inspecting the interior of a machine, pressure vessel, etc.
8. Make sure that no tools, loose parts or rags are left in or on the unit.
9. Before clearing the unit for use after maintenance or overhaul, check that operating pressures, temperatures and time settings are correct and that the control and shut-down devices function correctly. If removed, check that the coupling guard of the compressor drive shaft has been reinstalled.
10. Every time the separator element is renewed, examine the discharge pipe and the inside of the oil separator vessel for carbon deposits; if excessive, the deposits should be removed.
11. Protect the motor, air filter, electrical and regulating components, etc. to prevent moisture from entering them, e.g. when steam-cleaning.
12. Make sure that all sound-damping material, e.g. on the bodywork and in the air inlet and outlet systems of the compressor, is in good condition. If damaged, replace it by genuine Atlas Copco material to prevent the sound pressure level from increasing.
13. Never use caustic solvents which can damage materials of the air net, e.g. polycarbonate bowls.
14. The following safety precautions are stressed when handling refrigerant:
    a. Never inhale refrigerant vapours. Check that the working area is adequately ventilated; if required, use breathing protection.
    b. Always wear special gloves. In case of refrigerant contact with the skin, rinse the skin with water. If liquid refrigerant contacts the skin through clothing, **never tear off or remove** the latter; flush abundantly with fresh water over the clothing until all refrigerant is flushed away; then seek medical first aid.
    c. Always wear safety glasses.
15. Protect hands to avoid injury from hot machine parts, e.g. during draining of oil.

Note: With stationary machine units driven by an internal combustion engine, allowance has to be made for extra safety precautions, e.g. spark arrestors, fuelling care, etc. Consult Atlas Copco.

All responsibility for any damage or injury resulting from neglecting these precautions, or by non-observance of ordinary caution and due care required in handling, operating, maintenance or repair, even if not expressly mentioned in this book, will be disclaimed by Atlas Copco.

HAF 7701
p97
REVO

What sets Atlas Copco apart as a company is our conviction that we can only excel in what we do if we provide the best possible know-how and technology to really help our customers produce, grow and succeed.

There is a unique way of achieving that - we simply call it the Atlas Copco way. It builds on **interaction**, on long-term relationships and involvement in the customers process, needs and objectives. It means having the flexibility to adapt to the diverse demands of the people we cater for.

It's the **commitment** to our customers' business that drives our effort towards increasing their productivity through better solutions. It starts with fully supporting existing products and continuously doing things better, but it goes much further, creating advances in technology through **innovation**. Not for the sake of technology, but for the sake of our customer's bottom line and peace-of-mind.

That is how Atlas Copco will strive to remain the first choice, to succeed in attracting new business and to maintain our position as the industry leader.

No. 2920 1207 06 / DC 99.11

Atlas Copco

www.atlascopco.com

HNF 7701
p 98
REVO

INTENTIONALLY
BLANK

NF 7701
PG9
REV0

Atlas Copco Stationary Air Compressors

GA55,-75 Pack
GA55W,-75W Pack
GA55,-75 Full-feature
Ga55W,-75W Full-feature

PARTS LIST

Atlas Copco

HNF 7701
p 100
REV 0

INTENTIONALLY
BLANK

HNF 7701

P101
REV0

COUNTRY	APPLICABLE CODE / RULE	AUTHORIZED BODY
Australia	AS1210	D .. Department of Industrial Relations (DIR)
Austria	TÜV-WIEN Merkblätter	Ta . Österreichischer Technischer Überwachungs-Verein (ATÜV)
European Union	CE 87/404 directives for simple pressure vessels	CE . Notified bodies are involved as applicable
Danmark	DNV Rules	N .. Det Norske Veritas (DNV)
Finland	SFS-Rules	Tk . Taurus Tarkaskuskeskus (TTK)
France	CODAP '92 - AD Merkblätter	S .. Département Régional de l'Industrie et de la Recherche et de l'Environnement (DRIRE)
Germany	AD Merkblätter	T .. Technischer Überwachungs-Verein (TÜV)
Germany	Normen GerLL	Lg . Germanischer Lloyd's (GerLL)
Great Britain	Lloyd's Register Rules, BS5500	L .. Lloyd's Register of Shipping (L.R.)
Italy	Raccolta's VSR/M/E/S	An . Instituto Superiore per la Prevenzione e la Sicurezza del Lavoro (ISPESL)
Sweden	Swedish Pressure Vessel Code	Sa . Svensk Anläggningsprovning (SA)
Switzerland	Technische Vorschriften für Druckbehälter und Kessel	Sv . Schweizerischer Verein für Druckbehälter Besitzer (SVDB)
United States	ASME Section VIII Div 1, TENA for Coolers	As . American Society of Mechanical Engineers (ASME)
Canada	CEC - Canadian Electrical Code PART1 (C22.1-94 Safety Standard for Electrical Installation)	C .. Canadian Standardization Association (CSA)
United States	NEC - National Electrical Code (NFPA - National Fire Protection Association)	U .. Underwriters Laboratories (UL)

INSTRUCTIONS FOR USE (en)

1 ORDERING PARTS
Always quote the part number, the name and the quantity of the parts required, as well as the type and serial number of the machine.
2 EXPLANATION OF COLUMNS
Ref. - Reference number
Relates a part in list and drawing. Parts without reference number are not shown on the drawing.
Part No. - Part number
If no part number is given the part cannot be obtained as spare part. A part of which the number is followed by a black dot is comprised in the bold printed assembly right above.
Note: An assembly is printed in bold in all columns.
"<<< >>>" directs to consult another list.
When the part number(s) of specific part(s) are placed below the reference/name line a choice must be made based upon the type/version of the machine.
Qty - Quantity
Indicates the quantity of parts related to the reference number. "AR" means "as required": bulk material or quantity to be determined.
Name: Translations of the English part names can be found in printed matter no. 2930 1214 00.
Remarks
Parts belonging to Service Kits are indicated by K1, K2....
Parts of a Service Kit may be spread over several lists.
A letter can indicate a part has been certified according to the listed codes or rules by the indicated authorized body; if a letter is put between brackets the part itself is not certified but must be used on units certified by the authorised body. Dimensions are given in millimeter.
3 AUTHORIZED BODIES: See above English text.

GEBRUIKSAANWIJZING (nl)

1 BESTELLEN VAN ONDERDELEN
Vermeld steeds het onderdeelnummer, de benaming en het aantal van de gewenste stukken, evenals het type en het serienummer van de machine.
2 TOELICHTING BIJ KOLOMMEN
Ref. - Referentienummer: brengt een bepaald onderdeel in de lijst in verband met de tekening. Onderdelen zonder referentienummer worden niet op de tekening getoond.
Part No. - Onderdeelnummer: als er geen onderdeelnummer opgegeven wordt, is het onderdeel niet als wisselstuk verkrijgbaar. Een onderdeel waarvan het nummer gevolgd wordt door een zwarte stip maakt deel uit van de vet gedrukte eenheid er vlak boven.
Opmerking: Een eenheid is in alle kolommen in vet gedrukt.
"<<< >>>" geeft een aanwijzing om een andere lijst te raadplegen.
Als het (de) onderdeelnummer(s) van het (de) specifieke wisselstuk(ken) onder de regel met de referentie/benaming geplaatst is (zijn), moet er een keuze gemaakt worden volgens het type/de uitvoering van de machine.
Qty - Aantal: geeft het aantal onderdelen aan in verband met het overeenstemmend referentienummer. "AR" betekent "As required" (= "zoals vereist"): hoeveelheid of aantal te bepalen.
Name: vertalingen van de Engelse benamingen zijn te vinden in drukwerk nr. 2930 1214 00.
Remarks: onderdelen die deel uitmaken van "Service Kits" worden aangeduid met K1, K2 ... Onderdelen van een "Service Kit" kunnen verspreid zijn over verschillende lijsten.
Een letter kan aangeven dat een bepaald onderdeel werd geattesteerd volgens de codes of regels van de lijst door het aangegeven gevolmachtigde orgaan; indien een letter tussen haakjes staat, is het onderdeel zelf niet geattesteerd maar moet het wel gebruikt worden op eenheden die geattesteerd zijn door het gevolmachtigde orgaan. De afmetingen worden uitgedrukt in millimeter.
3 GEVOLMACHTIGDE ORGANEN: Zie boven Engelse tekst.

INSTRUCTIONS D'UTILISATION (fr)

1 COMMANDE DE PIECES DETACHEES
Indiquer le numéro de pièce détachée, le nom, la quantité de pièces désirée, le type et le numéro de série de la machine.
2 EXPLICATIONS DES COLONNES
Ref. - Numéro de référence: se réfère à une pièce dans la liste et l'illustration. Les pièces sans numéro de référence ne sont pas indiquées dans l'illustration.
Part No. - Numéro de pièce détachée: si le numéro de pièce n'est pas indiqué, la pièce n'est pas livrable comme pièce détachée. Une pièce dont le numéro est suivi d'un point noir est comprise dans l'ensemble dont le numéro est imprimé en gras et situé immédiatement au-dessus.
Note: Un ensemble est imprimé en gras dans toutes les colonnes.
"<<< >>>" indique à consulter une autre liste.
Si le(s) numéro(s) de pièce d'une (des) pièces(s) spécifiques sont placés au-dessous de la ligne de référence/nom, il faut choisir le type/version de la machine.
Qty - Quantité: indique la quantité de pièces concordant avec le numéro de référence. "AR" signifie "comme requis": matériau en vrac ou quantité à déterminer.
Name: Dans l'imprimé No. 2930 1214 00 se trouve la traduction des noms en anglais.
Remarques: les pièces appartenant aux Service Kits sont indiquées par K1, K2...
Les pièces d'un Service Kit sont parfois réparties sur plusieurs listes.
Une lettre peut indiquer si une pièce a été certifiée selon les codes ou règlements spécifiés par l'institution autorisée indiquée; une lettre entre parenthèses signifie que la pièce même n'est pas certifiée mais doit être utilisée sur les groupes certifiés par l'institution autorisée.
Les dimensions sont millimétriques.
3 INSTITUTIONS AUTORISÉES: Voir au-dessus du texte anglais.

GEBRAUCHSANWEISUNG (de)

1 BESTELLEN VON TEILEN
Immer Teilnummer, Bezeichnung und Quantität der erforderten Teile, sowie Typ und Seriennummer der Maschine angeben.
2 DEUTUNG DER SPALTEN
Ref. - Referenznummer: verweist auf ein Teil in der Liste und auf der Zeichnung. Teile ohne Referenznummer sind auf der Zeichnung nicht sichtbar.
Part No. - Teilnummer: falls keine Teilnummer angegeben ist, ist das Teil als Ersatzteil nicht erhältlich. Steht hinter der Teilnummer einen schwarzen Punkt, ist der Teil enthalten in der fett gedruckte Baugruppe gerade darüber.
Bemerkung: Eine Baugruppe ist fett gedruckt in allen Spalten.
"<<< >>>" bedeutet, daß Sie eine andere Liste nachschlagen müssen.
Steht die Teilnummer unter der Ref./Name Zeile, so muß eine Wahl gemacht werden je nach Typ/Ausführung der Maschine.
Qty - Quantität: gibt die Quantität der Teile in Bezug auf die Referenznummer an. "AR" bedeutet "as required" (nach Bedarf): Bulkmaterial oder Quantität zu bestimmen.
Name: Siehe Drucksache Nr. 2930 1214 00 für die Übersetzungen der englischen *Teilbezeichnungen.*
Remarks: Teile enthalten in einem Service Kit werden mit K1, K2 ... angegeben.
Die Teile eines Service Kits können über mehrere Listen verbreitet stehen.
Eine Buchstabe gibt an, daß der Teil durch die angegebene zuständige Stelle zertifiziert wurde, den aufgeführten Anordnungen oder Vorschriften entsprechend; steht die Buchstabe zwischen Klammern, bedeutet das, daß der Teil selbst nicht zertifiziert wurde, aber verwendet werden muß auf Maschinen, die durch die zuständige Stelle zertifiziert wurden. Die Abmessungen stehen in Millimeter.
3 ZUSTÄNDIGE STELLEN: siehe oben.

INSTRUCCIONES PARA EL MANEJO (es)

1 PEDIDO DE PIEZAS
Cite siempre el número de la pieza, la designación y la cantidad de las piezas deseadas, así como el tipo y número de serie de la máquina.
2 EXPLICACION DE LAS COLUMNAS
Ref. - Número de referencia
Establece relación entre una pieza en la lista y el dibujo. Una pieza sin número de referencia no figura en el dibujo.
Part No. - Número de pieza
Si no se indica ningún número de pieza, la pieza no se encuentra disponible en calidad de pieza de repuesto. Una pieza cuyo número va seguido de un punto negro va incluida en el conjunto impreso en letras negritas arriba de la misma.
Nota: Un conjunto va impreso en letras negritas en todas las columnas.
"<<< >>>" remite a otra lista.
Si el (los) número(s) de una pieza específica se hallan debajo de la línea con la referencia/designación, hay que hacerse una selección basada en el tipo/versión de la máquina.
Qty - Cantidad
Indica la cantidad de piezas referente al número de referencia. "AR" significa "as required" ("según se requiera"): se ha de determinar la cantidad o el material a granel.
Name - Designación
Las traducciones de las designaciones inglesas de las piezas se encuentran en Impreso No. 2930 1214 00.
Remarks - Observaciones
Las piezas que forman parte de equipos de servicio ("Service Kits") están indicados por K1, K2...
Es posible que las partes de un solo "Service Kit" vayan esparcidas por varias listas.
Una letra puede indicar que una pieza ha sido certificada por la entidad autorizada indicada conforme a los códigos o reglas especificados; si una letra se encuentra entre paréntesis, la pieza misma no ha sido certificada, pero debe ser empleada en unidades certificadas por la entidad autorizada. Las dimensiones se expresan en milímetros.

INSTRUKTIONER FÖR ANVÄNDANDE (sv)

1 BESTÄLLNING AV DETALJER
Uppge alltid detaljnummer, benämning och antal på delar som beställes, liksom också maskinens typbeteckning och tillverkningsnummer.
2 FÖRKLARING AV SPALTER
Ref. - Referensnummer
Sätter i relation en särskild detalj i förteckningen och ritningen. Detaljer utan referensnummer visas inte på ritningen.
Part No. - Reservdelsnummer
Om inget reservdelsnummer anges, är detaljen inte tillgänglig som reservdel. En reservdel vilkens nummer följs av en svart prick, ingår i den enhet som är tryckt i fetstil och står direkt ovan.
Anmärkning: En enhet är tryckt i fetstil i alla spalter.
"<<< >>>" anger att en annan förteckning skall konsulteras.
Om de(t) reservdelsnummer på (en) specifik(a) del(ar) placeras nedanför raden med referens/beteckning skall ett val göras enligt maskinens typ/utförande.
Qty - Antal
Anger antalet detaljer i relation till motsvarande referensnummer. "AR" betyder "As required" (= "som erfordras"): basmaterial eller antal skall bestämmas.
Name: Översättningar på de engelska reservdelsbeteckningarna finns i trycksak nr. 2930 1214 00.
Detaljer som ingår i "Service Kits" anges av K1, K2 ...
Detaljer från en "Service Kit" kan vara spridda över flera förteckningar.
En bokstav kan ange att en detalj har attesterats enligt de koder eller regler som uppförs på listan av det angivna befullmäktigade organet; om en bokstav står inom parentes, har själva detaljen inte attesterats, utan måste användas på enheter som attesterades av det befullmäktigade organet. Dimensioner uttrycks i millimeter.
3 BEFULLMÄKTIGADE ORGAN: Se ovanför engelsk text.

Atlas Copco Stationary Air Compressors

GA55, -75 Pack
GA55 W, -75 W Pack
GA55, -75 Full-feature
GA55 W, -75 W Full-feature

HNF 7701
P102
REVO

Parts list

From following serial No. onwards:
GA55 (W)-GA75 (W) : AII-465 000

"Copyright 1999, Atlas Copco Airpower n.v., Antwerp, Belgium.

Any unauthorized use or copying of the contents or any part of this book is prohibited.
This applies in particular to trademarks, model denominations, part numbers and drawings."

No. 2930 1268 01

Registration code: APC G55-75/'96 / 39 / 995
Replaces 2930 1268 00

1999-01

Web-site: http://www.atlascopco-compressors.com

2930126801

Atlas Copco

Contents
Inhoud
Innehåll
Inhaltsverzeichnis
Table des matières
Indice

Indice
Innholdsfortegnelse
Indice
Indholdsfortegnelse
Sisällysluettelo

HNF 7701
P103
REJO

Compressor element(s) and drive gear
Compressorelement(en) en aandrijving
Kompressorelement och drivning
Kompressorelement(e) und Antrieb
Elément(s) compresseur(s) et entraînement
Elemento(s) compresor(es) y accionamiento
Elemento(i) compressore e ingranaggi di azionamento
Kompressorelement og drivhjul
Elemento(s) compressor(es) e accionamento
Kompressorelement(er) og drivgir
Kompressorielementit ja voimansiirto 1

Motor, frame and coupling
Motor, frame en koppeling
Motor, ram och koppling
Motor, Rahmen und Kupplung
Moteur, châssis et accouplement
Motor, bastidor y acoplamiento
Motore elettrico, telaio e giunto
Motor, ramme og kobling
Motor, base e acopulamento
Motor, ramme og kopling
Moottori, runko ja kytkin 2

Air inlet
Luchtinlaat
Luftintag
Lufteinlaß
Admission d'air
Entrada de aire
Presa d'aria
Luftindsug
Admissão de ar
Luftinnløp
Tuloilma 3

Air receiver and delivery pipes
Luchtketel en drukpijpen
Luftbehållare och utloppsrör
Luftbehälter und Druckleitungen
Réservoir d'air et tuyaux de refoulement
Depósito de aire y tubos de descarga
Serbatoio dell'aria e tubi della mandata
Oliebeholder og udløbsrør
Reservatório de ar e tubagem de descarga
Luftbeholder og utløpsrør
Ilmasäiliö ja paineilmaputket

GA55, GA75 4

GA55 W, GA75 W 5

Oil system
Oliesysteem
Oljesystem
Ölsystem
Système d'huile
Sistema de aceite
Sistema dell'olio
Oliesystem
Sistema de óleo
Oljesystem
Voitelujärjestelmä

- GA55, GA75 6
- GA55 W, GA75 W 7

Oil cooler ..... GA55 W, GA75 W
Oliekoeler
Oljekylare
Ölkühler
Refroidisseur d'huile
Refrigerador de aceite
Refrigeratore dell'olio
Oliekøler
Arrefecedor de óleo
Oljekjøler
Öljynjäähdytin 8

Aftercooler ..... GA55 W, GA75 W
Nakoeler
Efterkylare
Nachkühler
Refroidisseur final
Refrigerador posterior
Refrigeratore finale
Efterkøler
Arrefecedor final
Etterkjøler
Jälkijäähdytin 9

Water system ..... GA55 W, GA75 W
Watersysteem
Vattensystem
Wassersystem
Système d'eau
Sistema de agua
Sistema dell'acqua
Vandsystem
Sistema de água
Vannsystem
Vesijärjestelmä 10

Unloading valve
Ontlastventiel
Avlastningsventil
Entlastungsventil
Soupape de décharge
Válvula de descarga
Valvola di messa a vuoto
Aflastningsventil
Válvula de descarga
Avlastningsventil
Kevennysventtiili 11

Bodywork
Karrosserie
Karosseri
Karosserie
Capotage
Carrocería
Cappottatura
Karosseri
Carroceria
Kabinett
Kotelo 12

Water separator connections ..... **Pack version**
Aansluitingen van de waterafscheider
Vattenavskiljarens anslutningar
Anschlüsse des Wasserabscheiders
Connexions du séparateur d'eau
Conexiones del separador de agua
Connessioni del separatore di condensa
Tilslutninger, vandseparator
Ligações ao dreno de condensados
Vannutskillertilkoplinger
Vedenerottimen liitännät 13

Air dryer connections ..... **Full-feature**
Aansluitingen van de luchtdroger
Lufttorkaranslutningar
Anschlüsse des Lufttrockners
Connexions du sécheur d'air
Conexiones del secador de aire
Connessioni del essiccatore d'aria
Tilslutninger, køletørrer
Ligações do secador de ar
Lufttørkertilkoplinger
Kuivaimen liitännät 14

Regulating system
Regelsysteem
Reglersystem
Regelsystem
Système de régulation
Sistema de regulación
Sistema di regolazione
Reguleringssystem
Sistema de regulação
Reguleringssystem
Säätöjärjestelmä 15

Start cubicle - star/delta
Startkast - ster/driehoek
Startskåp - stjärn/triangel
Anlaßschrank - Stern/Dreieck
Armoire de démarrage - étoile/triangle
Cubículo de arranque - estrella/triángulo
Armadio apparecch. di avviamento - stella/triangolo
Starterskab - stjerne/trekant
Cubículo-arranque estrela/triângulo
Startskap - stjerne-trekant
Käynnistinkotelo - Y/D

- 50Hz - 60Hz 16

- CSA/UL 60Hz 17

Air dryer **ID160-230**
Luchtdroger
Lufttorkare
Lufttrockner
Sécheur d'air
Secador de aire
Essiccatore d'aria
Lufttørrer
Secador de ar
Lufttørker
Kuivain 18

Modulating control (Optional)
Modulatiecontrole
Moduleringskontroll
Modulationskontrolle
Contrôle de la modulation
Control de modulación
Controllo continuo
Modulationsstyring
Controlo de modulação
Modulasjonsregulering
Modulointisäätö 19

Heat recovery system (Optional)
Warmterecuperatiesysteem
Värmeåtervinningssystem
Wärmerückgewinnungssystem
Système de récuperation de chaleur
Sistema de recuperación de calor
Sistema di recupero del calore
Varmegenvindingssystem
Sistema de recuperação de energia
Varmegjenvinningssystem
Lämmön talteenottojärjestelmä

- GA55, GA55 W 20

- GA75, GA75 W 21

Drain system (Optional)
Aftapsysteem
Avtappningssystem
Ablaßsystem
Système de vidange
Sistema de drenaje
Sistema di scarico
Drænsystem
Sistema de drenagem de condensados
Avtappingssystem
Lauhteenpoistojärjestelmä

- Electronic condensate drain 22

- OSD 23

Service kits
Service kits
Service kits
Service Kits
Service kits
Service kits
Kit per la manutenzione
Service kits
Conjuntos de reparação
Servicesett
Huoltotarvikesarjat 24

HMF 7701
p 105
REV U

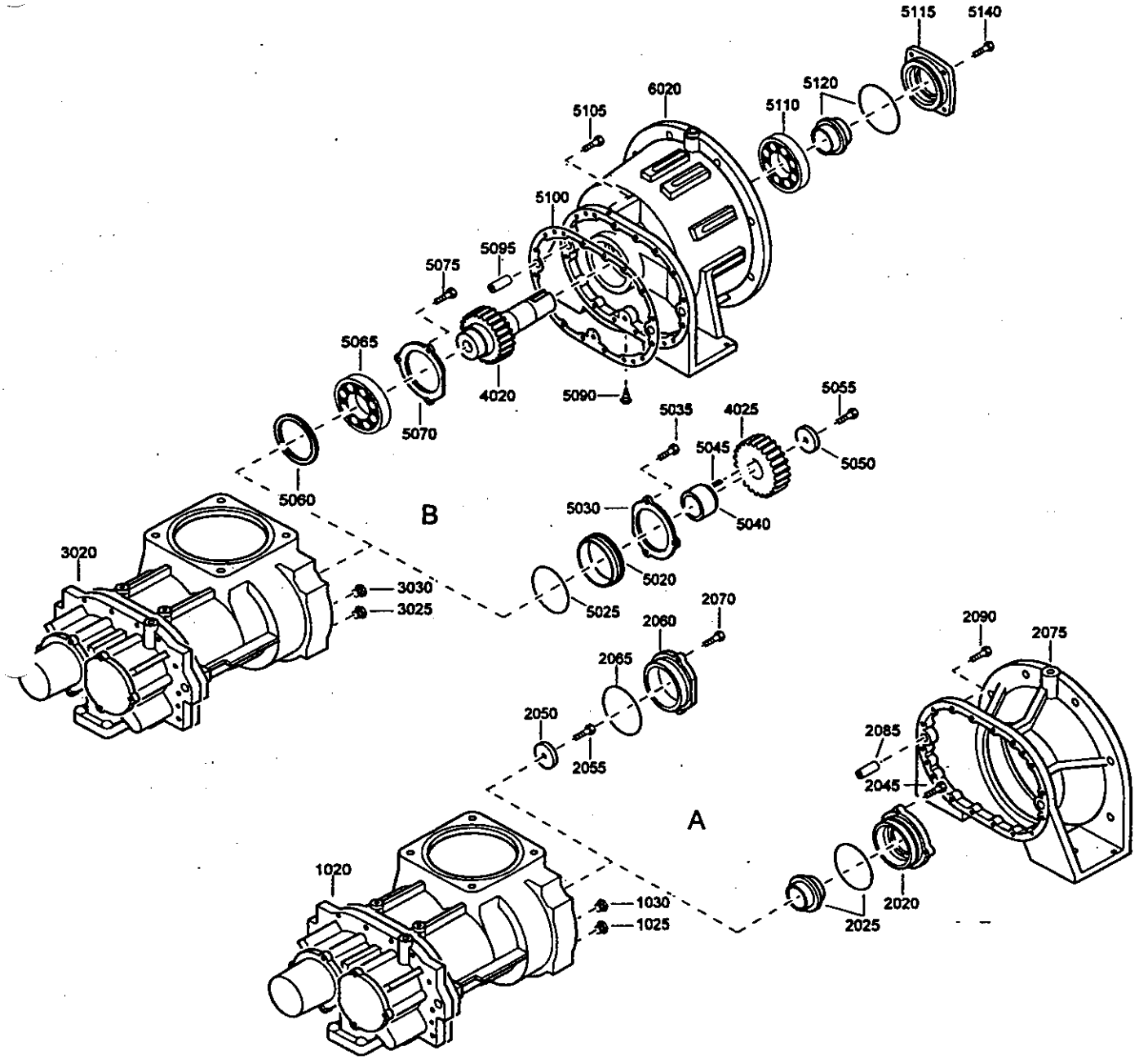

60493_01

0493_01

HNF 7701
P106
REV 0

Ref.	Part number	Qty	Name	Remarks
A			**Direct drive**	
1020		**1**	**Service stage**	
	2989 0152 00		GA55 (W)-7.5, GA55 (W)-8	
	2989 0163 00		GA75 (W)-7.5	
1025	0686 6132 00 •	1	Plug	
1030	0686 6126 00 •	1	Plug	
2020	1616 6014 00	1	Cover	
2025	**2904 0109 00**	**1**	**Lipseal kit**	
	0663 2106 19 •	1	O-ring	
2045	0147 1364 03	3	Hexagon bolt	
2050	1616 4928 00	1	Washer	
2055	0147 1409 03	1	Hexagon bolt	
2060	1616 4941 00	1	Cover	
2065	0663 2106 19	1	O-ring	
2070	0147 1364 03	3	Hexagon bolt	
2075	1613 8301 00	1	Coupling housing	
2085	0101 1680 00	2	Parallel pin	
2090	0147 1365 03	16	Hexagon bolt	
B			**Gear box drive**	
3020	**2989 0152 00**	**1**	**Service stage**	
			GA55 (W)-10-13,	
			GA55 (W)-100-125,	
			GA55 (W)-150-175,	
			GA75 (W)-8-10-13,	
			GA75 (W)-100-125,	
			GA75 (W)-150-175	
3025	0686 6132 00 •	1	Plug	
3030	0686 6126 00 •	1	Plug	
4020		1	Gearwheel	
	1616 6417 00		GA55 (W)-10	
	1616 6436 00		GA55 (W)-13	
	1616 6421 00		GA75 (W)-8, GA75 (W)-10	
	1202 8184 00		GA75 (W)-13,	
			GA75 (W)-125	
	1202 6757 00		GA55 (W)-100,	
			GA75 (W)-175	
	1202 6759 00		GA55 (W)-125	
	1202 6765 00		GA55 (W)-150	
	1202 6761 00		GA55 (W)-175	
	1616 6448 00		GA75 (W)-100	
	1202 7966 00		GA75 (W)-150	

Ref.	Part number	Qty	Name	Remarks
4025		1	Gearwheel	
	1616 6418 00		GA55 (W)-10	
	1616 6437 00		GA55 (W)-13	
	1616 6422 00		GA75 (W)-8, GA75 (W)-10	
	1202 8185 00		GA75 (W)-13, GA75 (W)-125	
	1202 6756 00		GA55 (W)-100,	
			GA75 (W)-175	
	1202 6758 00		GA55 (W)-125	
	1202 6764 00		GA55 (W)-150	
	1202 6760 00		GA55 (W)-175	
	1616 6449 00		GA75 (W)-100	
	1202 7967 00		GA75 (W)-150	
5020	1616 4933 00	1	Bushing	
5025	0663 2106 19	1	O-ring	
5030	1616 4939 00	1	Cover	
5035	0147 1362 03	3	Hexagon bolt	
5040	1616 4932 00	1	Bushing	
5045	1202 6737 00	1	Key	
5050	1616 4936 00	1	Spacer	
5055	0147 1409 03	1	Hexagon bolt	
5060	1616 4934 00	1	Ring	
5065	0508 1100 32	1	Bearing	
5070	1616 4939 00	1	Cover	
5075	0147 1362 03	3	Hexagon bolt	
5090	1619 6032 00	1	Nipple	1)
5095	0101 1680 00	2	Parallel pin	
5100	1202 7022 00	1	Gasket	
5105	0147 1365 03	16	Hexagon bolt	
5110	0506 0100 09	1	Bearing	
5115	1616 4946 00	1	Retainer	
5120	**2904 0070 00**	**1**	**Lipseal kit**	
	0663 2106 19 •	1	O-ring	
5140	0211 1362 03	4	Cap screw	
6020		1	Gear casing	
	1613 8302 00		GA55 (W)-10-13,	
			GA75 (W)-8-10-13	
	1613 8359 00		GA55 (W) 100-125-150-175,	
			GA75 (W) 100-125-150-175	

1) Vibration monitoring "Shock Pulse Measurement" / Trillingscontrole "SPM" / Vibrationskontroll "Stötpulsmätning" / Schwingungsüberwachung "SPM" / Surveillance des vibrations "SPM" / Monitorización de vibraciones "SPM" / Controlo di vibrazione "SPM" . Vibrationsovervågning "SPM" / Controlo de vibrações "SPM" / Vibrasjonsovervåking "SPM" / SPM--tärinänvalvonta

ITMF 7701
p 107
REVO

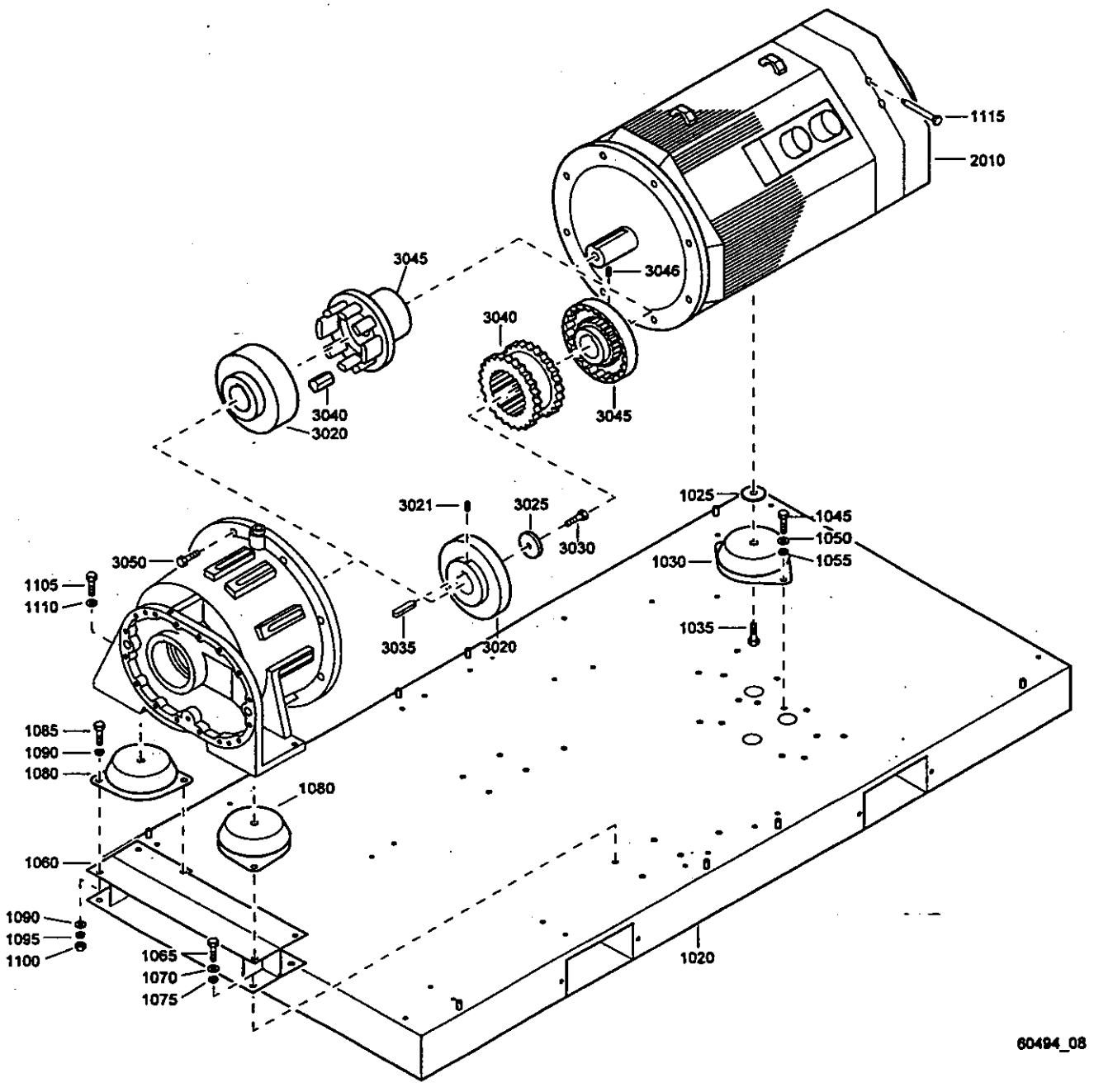

60494_08

HNF 7701
p 108
REVO

Ref.	Part number	Qty	Name	Remarks
1020	1613 8311 00	1	Frame	
1025	1613 8632 00	1	Spacer	
1030	1613 6752 11	1	Antivibr.pad	
1035	0147 1483 03	1	Bolt	
1045	0147 1400 03	2	Hexagon bolt	
1050	0301 2358 00	2	Washer	
1055	0333 3237 00	2	Lockwasher	
1060	1613 8487 00	1	Support	
1065	0147 1400 03	4	Hexagon bolt	
1070	0301 2358 00	4	Washer	
1075	0333 3237 00	4	Lockwasher	
1080	1613 6752 10	2	Antivibr.pad	
1085	0147 1401 03	4	Hexagon bolt	
1090	0301 2358 00	8	Washer	
1095	0333 3237 00	4	Lockwasher	
1100	0266 2112 00	4	Nut	
1105	0147 1479 03	2	Hexagon bolt	
1110	0301 2378 00	2	Washer	
1115	1613 7874 01	2	Spm nipple	1)
2010		1	Motor	
	1080 2932 01		GA55 230VD/50Hz	
	1080 2932 02		GA55 400VD/50Hz	
	1080 2932 03		GA55 500VD/50Hz	
	1080 2932 26		GA55 200VD/50Hz	
	1080 2933 07		GA55 220-230VD/60Hz, GA55 440-460VD/60Hz	
	1080 2933 08		GA55 380VD/60Hz	
	1080 2933 10		GA55 575VD/60Hz	
	1080 2933 16		GA55 200VD/60Hz	
	1080 2934 01		GA75 230VD/50Hz	
	1080 2934 02		GA75 400VD/50Hz	
	1080 2934 03		GA75 500VD/50Hz	
	1080 2934 26		GA75 200VD/50Hz	
	1080 2935 07		GA75 220-230VD/60Hz, GA75 440-460VD/60Hz	
	1080 2935 08		GA75 380VD/60Hz	
	1080 2935 10		GA75 575VD/60Hz	
	1080 2935 16		GA75 200VD/60Hz	
3020		1	**Coupling half element**	
	1613 7267 00		GA55 (W)-10-13, GA55 (W)-100-125-150-175	
	1613 7268 01		GA55 (W)-7.5-8	
	1613 7269 00		GA75 (W)-8-10-13, GA75 (W)-100-125-150-175	
	1613 8772 00		GA75 (W)-7.5	
3021	•	1	Screw	
	0196 1360 00		GA55 (W)-10-13, GA55 (W)-100-125-150-175	
3025		1	Spacer	
	1613 8113 00		GA55 (W)-7.5-8, GA75 (W)-7.5-8-10-13, GA75 (W)-100-125-150-175	
3030		1	Hexagon bolt	
	0147 1408 03		GA55 (W)-7.5-8, GA75 (W)-7.5-8-10-13, GA75 (W)-100-125-150-175	
3035		1	Parallel key	
	0337 5229 00		GA55 (W)-7.5-8	
	0337 2293 23		GA55 (W)-10-13, GA55 (W)-100-125-150-175, GA75 (W)-7.5-8-10-13, GA75 (W)-100-125-150-175	
3040			Coupling element	
	1613 8280 00	1	GA55 (W)-7.5-8-10-13, GA55 (W)-100-125-150-175 GA75 (W)-7.5	
	1615 4185 00	1	GA75 (W)-8-10-13, GA75 (W)-100-125-150-175	
	1621 0204 00	8	GA75 (W)-7.5	
3045		1	**Coupling half motor**	
	1615 4183 18		GA55 (W)-7.5-8-10-13	
	1615 4183 19		GA55 (W)-100-125-150-175	
	1615 4184 16		GA75 (W)-8-10-13	
	1615 4184 17		GA75 (W)-100-125-150-175	
	1613 8710 00		GA75 (W)-7.5	
3046	0196 1360 00 •	1	Screw	
			GA75 (W)-8-10-13 GA75 (W)-100-125-150-175 GA75 (W)-7.5	
3050			Hexagon bolt / Cap screw	
	0147 1479 03	8	GA55 (W)-7.5-8-10-13, GA75 (W)-7.5-8-10-13	
	0211 1962 06	4	GA55 (W)-100-125-150-175, GA75 (W)-100-125-150-175	

1) Vibration monitoring "Shock Pulse Measurement" / Trillingscontrole "SPM" / Vibrationskontroll "Stötpulsmätning" / Schwingungsüberwachung "SPM" / Surveillance des vibrations "SPM" / Monitorización de vibraciones "SPM" / Controlo di vibrazione "SPM" / Vibrationsovervågning "SPM" / Controlo de vibrações "SPM" / Vibrasjonsovervåking "SPM" / SPM--tärinänvalvonta

ITNF 7701
P109
REV0

3

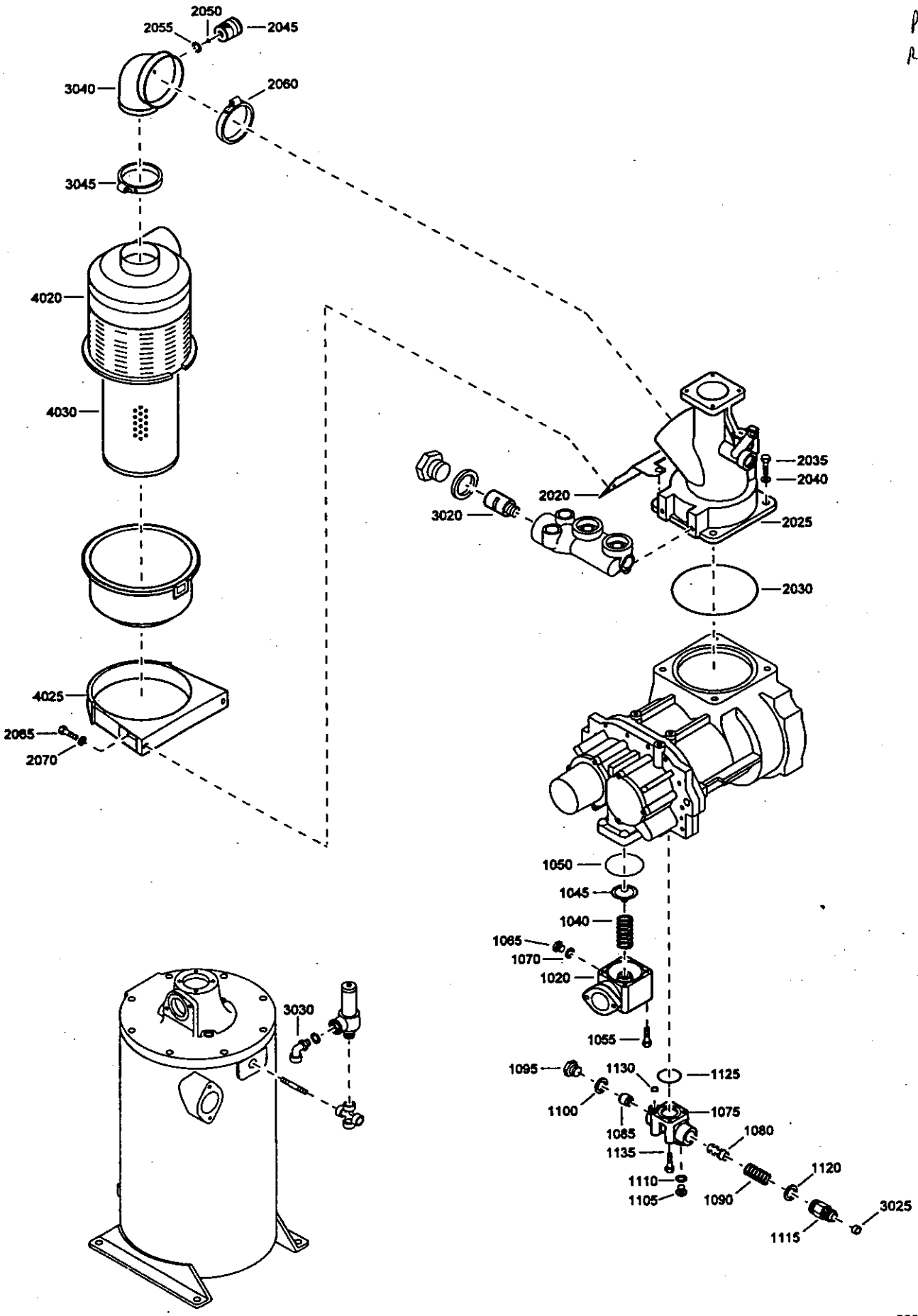

HMF 7701
P110
REV 0

Ref.	Part number	Qty	Name	Remarks
1020	1202 6771 00	1	Valve housing	
1040	1613 5165 00	1	Spring	
1045	1202 6139 00	1	Valve	
1050	0663 2104 03	1	O-ring	
1055	0147 1376 03	4	Hexagon bolt	
1065	0686 3716 01	2	Hexagon plug	
1070	0661 1000 25	2	Seal washer	
1075	1613 2355 00	1	Body	
1080	1613 2356 00	1	Valve	
1085	1613 2359 00	1	Piston	
1090	1613 2357 00	1	Spring	
1095	0686 4208 00	1	Hexagon plug	
1100	0661 1000 30	1	Seal washer	
1105	0686 4204 00	1	Hexagon plug	
1110	0661 1000 27	1	Seal washer	
1115	1613 8129 00	1	Nipple	
1120	0661 1000 30	1	Seal washer	
1125	0663 7135 00	1	O-ring	
1130	0663 3120 00	1	O-ring	
1135	0147 1336 03	4	Hexagon bolt	
2020	1613 8031 00	1	Support	
2025	**<<< >>>**	**1**	**Unloader**	
2030	0663 2106 43	1	O-ring	
2035	0147 1477 03	4	Hexagon bolt	
2040	0301 2378 00	4	Washer	
2045	1613 7912 01	1	Indicator	
2050	1619 5819 00	1	Sintered disk	

Ref.	Part number	Qty	Name	Remarks
2055	0657 5742 00	1	Flat gasket	
2060	0347 6120 00	1	Hose clip	
2065	0147 1327 03	2	Hexagon bolt	
2070	0301 2335 00	2	Washer	
3020		1	Thermostatic valve	
	1202 5869 02		13 bar(e), 175 psig	
	1619 7560 00		Others	
3025		1	Restrictor	
	1613 8130 00		13 bar(e), 175 psig	
3030	0560 0200 55	1	Elbow	
3040		1	Elbow	
	1613 8070 00		GA55 (W)	
	1613 8076 00		GA75 (W)	
3045		1	Hose clip	
	0347 6115 00		GA55 (W)	
	0347 6119 00		GA75 (W)	
		1	**Air filter ass'y**	
	1613 7400 80		**GA55 (W)**	
	1613 8002 80		**GA75 (W)**	
4020	•	1	Air filter	
	1613 7400 00		GA55 (W)	
	1613 8002 00		GA75 (W)	
4025	•	1	Support	
	1613 7401 00		GA55 (W)	
	1613 8005 00		GA75 (W)	
4030	•	1	Filter element	
	1613 7408 00		GA55 (W)	
	1613 8004 00		GA75 (W)	

4

HNF 7701
P111
REVO

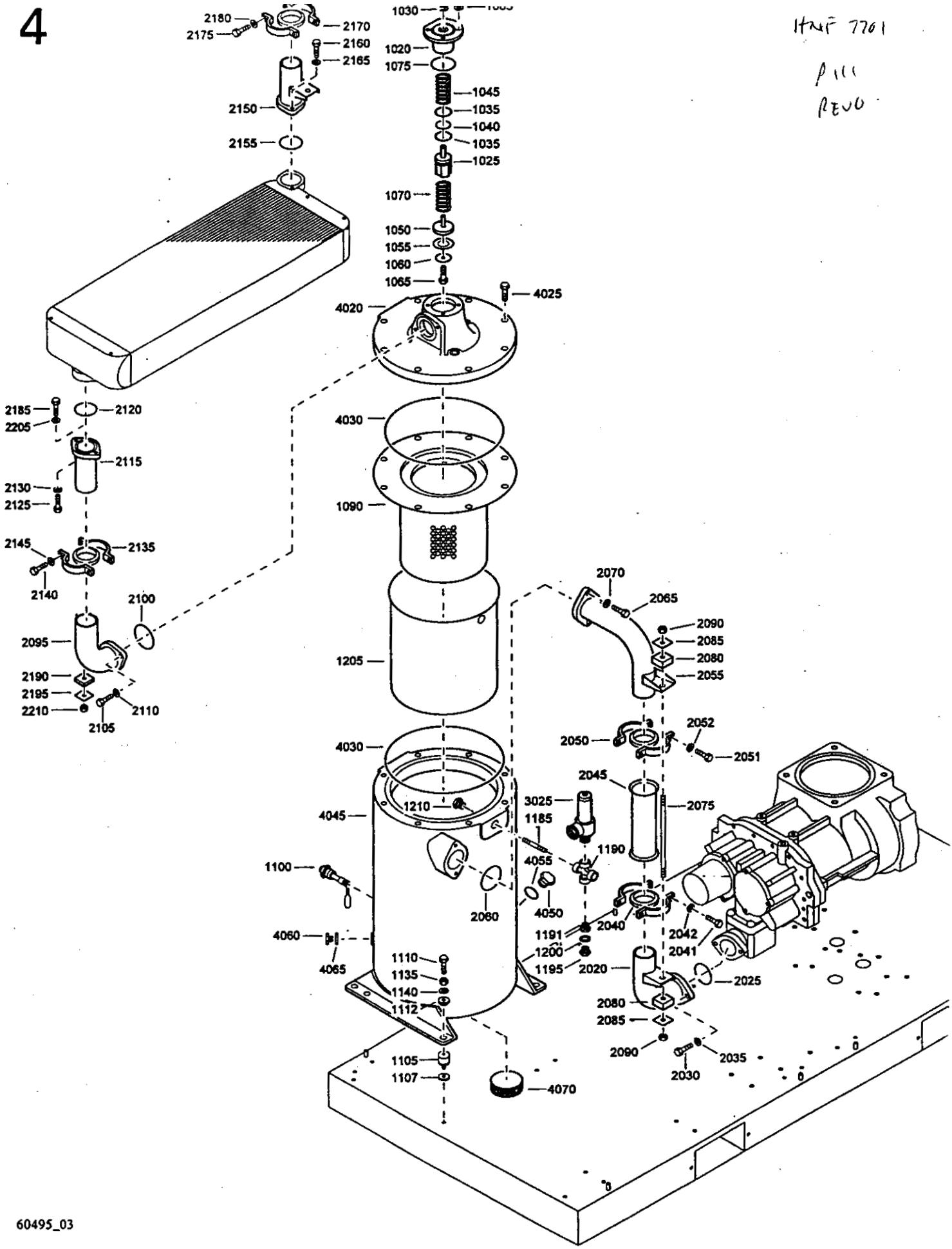

60495_03

HNF 7701
P112
REV0

Ref.	Part number	Qty	Name	Remarks
1020	1202 9747 00	1	Cover	
1025	1613 3220 01	1	Piston	
1030	0335 3111 00	1	Retaining ring	
1035	1614 4662 00	2	Piston ring	
1040	0663 3133 00	1	O-ring	
1045	1612 4048 00	1	Compr.spring	
1050	1613 3221 00	1	Piston valve	
1055	1613 3223 01	1	Washer	
1060	1613 3222 00	1	Washer	
1065	0147 1244 03	1	Hexagon bolt	
1070	1612 4049 00	1	Compr.spring	
1075	0663 7136 00	1	O-ring	
1080	0147 1362 03	4	Hexagon bolt	
1085	0301 2344 00	4	Washer	
1090	1613 8007 00	1	Oil sep.element	
1100	1616 5108 00	1	Level gauge	
1105	1613 8334 00	4	Antivibration pad	
1107	0300 0274 17	4	Washer	
1110	0147 1960 44	4	Hexagon bolt	
1112	1613 8512 00	4	Bushing	
1135	0266 2110 00	4	Nut	
1140	0301 2335 00	4	Washer	
1185	0551 0001 05	1	Threaded pipe	
1190	0567 0000 17	1	Cross	
1191	0605 8300 50	1	Bushing	
1195	0686 3716 02	1	Hexagon plug	
1200	0661 1000 27	1	Seal washer	
1205	1613 8008 00	1	Shield	
1210	1613 8103 00	1	Bushing	
2020	1613 8335 00	1	Pipe	
2025	0663 7138 00	1	O-ring	
2030	0147 1401 03	2	Hexagon bolt	
2035	0301 2358 00	2	Washer	
2040	**1613 8057 80**	**1**	**Joint set**	
	1613 8057 00 •	1	Joint	
2041	0147 1960 44	2	Hex.bolt	
2042	0301 2335 00	2	Washer	
2045	1613 8055 00	1	Pipe	
2050	**1613 8057 80**	**1**	**Joint set**	
	1613 8057 00 •	1	Joint	
2051	0147 1960 44	2	Hex.bolt	
2052	0301 2335 00	2	Washer	
2055	1613 8336 00	1	Pipe	
2060	0663 7138 00	1	O-ring	
2065	0147 1364 03	2	Hexagon bolt	
2070	0301 2344 00	2	Washer	
2075	0248 9979 57	1	Threaded rod	
2080	1613 8078 01	2	Antivibration pad	
2085	1202 5452 00	2	Washer	
2090	0291 1111 00	2	Locknut	
2095	1613 8340 00	1	Pipe	
2100	0663 7138 00	1	O-ring	

Ref.	Part number	Qty	Name	Remarks
2105	0147 1363 03	2	Hexagon bolt	
2110	0301 2344 00	2	Washer	
2115	1613 8048 00	1	Pipe	
2120	0663 9868 00	1	O-ring	
2125	0211 1326 03	2	Cap screw	
2130	0301 2335 00	2	Washer	
2135	**1613 8057 80**	**1**	**Joint set**	
	1613 8057 00 •	1	Joint	
2140	0147 1960 44	2	Hex.bolt	
2145	0301 2335 00	2	Washer	
2150	1613 8048 00	1	Pipe	
2155	0663 9868 00	1	O-ring	
2160	0211 1326 03	2	Cap screw	
2165	0301 2335 00	2	Washer	
2170	**1613 8057 80**	**1**	**Joint set**	
	1613 8057 00 •	1	Joint	
2175	0147 1960 44	2	Hex.bolt	
2180	0301 2335 00	2	Washer	
2185	0147 1380 12	1	Hexagon bolt	
2190	1613 8078 02	1	Antivibration pad	
2195	1202 5452 00	1	Washer	
2205	0301 2344 00	2	Washer	
2210	0266 2111 00	2	Nut	
3025		1	Safety valve	
	1202 5401 00		T	14.5 bar(e)
	1202 5749 00		T	12 bar(e)
	1202 7903 00		An	11 bar(e)
	1202 7905 00		An	14 bar(e)
	1613 5452 00		As	200 psig
	1613 7810 00		As	215 psig
		1	**Vessel**	
	1613 8000 82		**L, D, As, Tk**	
	1613 8000 83		**T**	
	1613 8000 84		**Ta**	
	1613 8000 85		**JIS**	
	1613 8000 87		**An**	
	1613 8000 89		**S, Sa**	
4020	•	1	Valve housing	
	1613 8001 03		T	
	1613 8001 07		An, Ta	
	1613 8001 01		Others	
4025	•	8	Bolt	
	0147 1961 16		T, (Ta, S, Sa)	
	0147 1960 34		(An)	
	0147 1961 17		Others	
4030	0663 7175 00 •	2	O-ring	
4045	•	1	Vessel	
4050	1202 8992 00 •	1	Plug	
4055	0663 2102 15 •	1	O-ring	
4060	0686 3716 02 •	1	Hexagon plug	
4065	0661 1000 27 •	1	Seal washer	
4070	1613 8006 00 •	1	Plug	

5

HMF 7701

P113
REVO

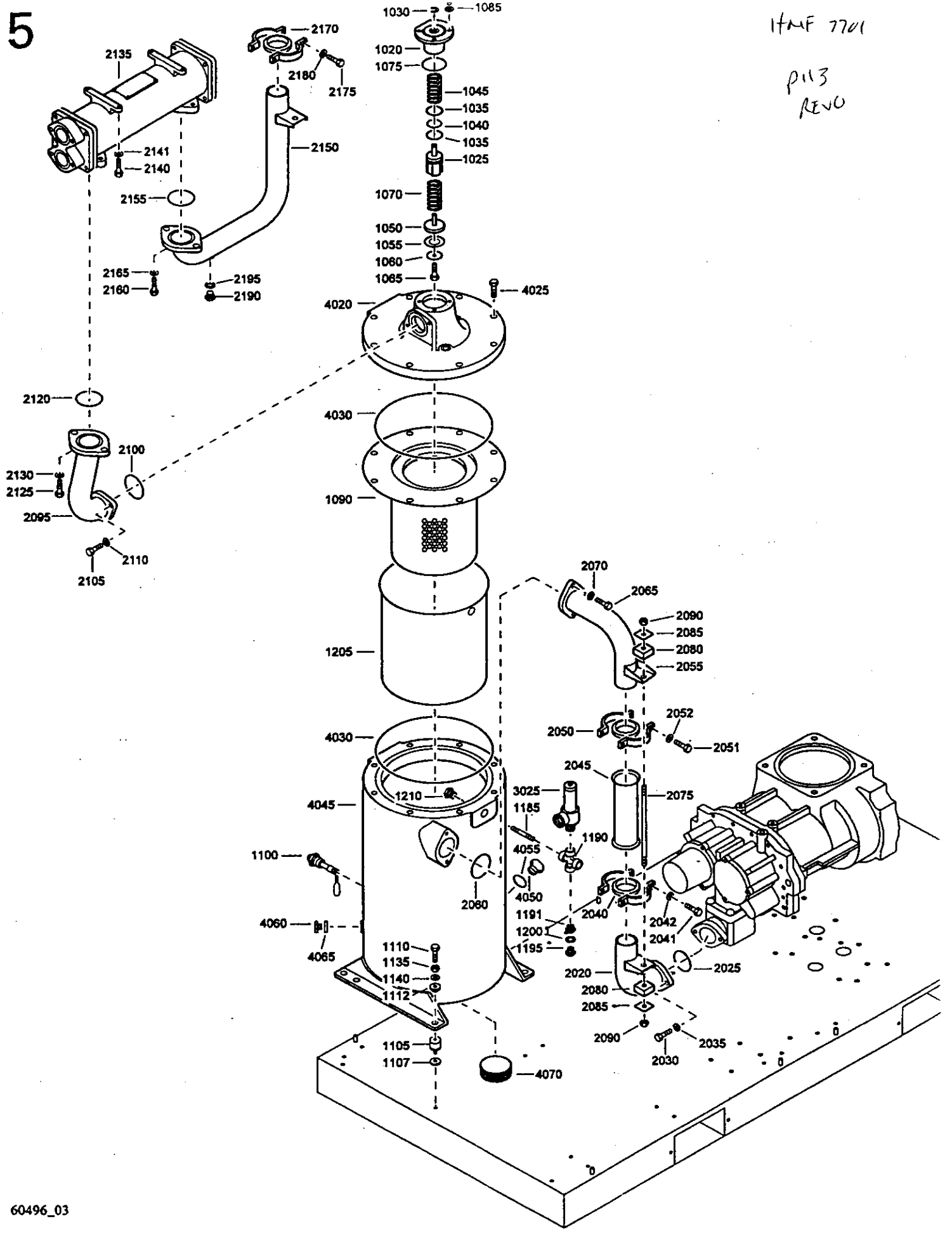

60496_03

HNF 7701
P114
REVO

Ref.	Part number	Qty	Name	Remarks
1020	1202 9747 00	1	Cover	
1025	1613 3220 01	1	Piston	
1030	0335 3111 00	1	Retaining ring	
1035	1614 4662 00	2	Piston ring	
1040	0663 3133 00	1	O-ring	
1045	1612 4048 00	1	Compr.spring	
1050	1613 3221 00	1	Piston valve	
1055	1613 3223 01	1	Washer	
1060	1613 3222 00	1	Washer	
1065	0147 1244 03	1	Hexagon bolt	
1070	1612 4049 00	1	Compr.spring	
1075	0663 7136 00	1	O-ring	
1080	0147 1362 03	4	Hexagon bolt	
1085	0301 2344 00	4	Washer	
1090	1613 8007 00	1	Oil sep.element	
1100	1616 5108 00	1	Level gauge	
1105	1613 8334 00	4	Antivibration pad	
1107	0300 0274 17	4	Washer	
1110	0147 1960 44	4	Hexagon bolt	
1112	1613 8512 00	4	Bushing	
1135	0266 2110 00	4	Nut	
1140	0301 2335 00	4	Washer	
1185	0551 0001 05	1	Threaded pipe	
1190	0567 0000 17	1	Cross	
1191	0605 8300 50	1	Bushing	
1195	0686 3716 02	1	Hexagon plug	
1200	0661 1000 27	1	Seal washer	
1205	1613 8008 00	1	Shield	
1210	1613 8103 00	1	Bushing	
2020	1613 8335 00	1	Pipe	
2025	0663 7138 00	1	O-ring	
2030	0147 1401 03	2	Hexagon bolt	
2035	0301 2358 00	2	Washer	
2040	**1613 8057 80**	**1**	**Joint set**	
	1613 8057 00 •	1	Joint	
2041	0147 1960 44	2	Hex.bolt	
2042	0301 2335 00	2	Washer	
2045	1613 8055 00	1	Pipe	
2050	**1613 8057 80**	**1**	**Joint set**	
	1613 8057 00 •	1	Joint	
2051	0147 1960 44	2	Hex.bolt	
2052	0301 2335 00	2	Washer	
2055	1613 8336 00	1	Pipe	
2060	0663 7138 00	1	O-ring	
2065	0147 1364 03	2	Hexagon bolt	
2070	0301 2344 00	2	Washer	
2075	0248 9979 57	1	Threaded rod	
2080	1613 8078 01	2	Antivibration pad	
2085	1202 5452 00	2	Washer	
2090	0291 1111 00	2	Locknut	
2095	1613 8327 00	1	Pipe	
2100	0663 7138 00	1	O-ring	
2105	0147 1363 03	2	Hexagon bolt	
2110	0301 2344 00	2	Washer	
2120	0663 7138 00	1	O-ring	
2125	0147 1402 03	2	Hexagon bolt	
2130	0301 2358 00	2	Washer	
2135	**<<< >>>**	**1**	**Aftercooler**	
2140	0147 1327 03	4	Hexagon bolt	
2141	0301 2335 00	4	Washer	
2150	1613 8101 00	1	Pipe	
2155	0663 7138 00	1	O-ring	
2160	0147 1402 03	2	Hexagon bolt	
2165	0301 2358 00	2	Washer	
2170	**1613 8057 80**	**1**	**Joint set**	
	1613 8057 00 •	1	Joint	
2175	0147 1960 44	2	Hex.bolt	
2180	0301 2335 00	2	Washer	
2190	0686 3716 01	1	Hexagon plug	
2195	0661 1000 25	1	Seal washer	
3025		1	Safety valve	
	1202 5401 00		T	14.5 bar(e)
	1202 5749 00		T	12 bar(e)
	1202 7903 00		An	11 bar(e)
	1202 7905 00		An	14 bar(e)
	1613 5452 00		As	200 psig
	1613 7810 00		As	215 psig
		1	Vessel	
	1613 8000 82		**L, D, As, Tk**	
	1613 8000 83		**T**	
	1613 8000 84		**Ta**	
	1613 8000 85		**JIS**	
	1613 8000 87		**An**	
	1613 8000 89		**S, Sa**	
4020	•	1	Valve housing	
	1613 8001 03		T	
	1613 8001 07		An, Ta	
	1613 8001 01		Others	
4025	•	8	Bolt	
	0147 1961 16		T, (Ta, S, Sa)	
	0147 1960 34		(An)	
	0147 1961 17		Others	
4030	0663 7175 00 •	2	O-ring	
4045	•	1	Vessel	
4050	1202 8992 00 •	1	Plug	
4055	0663 2102 15 •	1	O-ring	
4060	0686 3716 02 •	1	Hexagon plug	
4065	0661 1000 27 •	1	Seal washer	
4070	1613 8006 00 •	1	Plug	

4NF 7701
P115
REVO

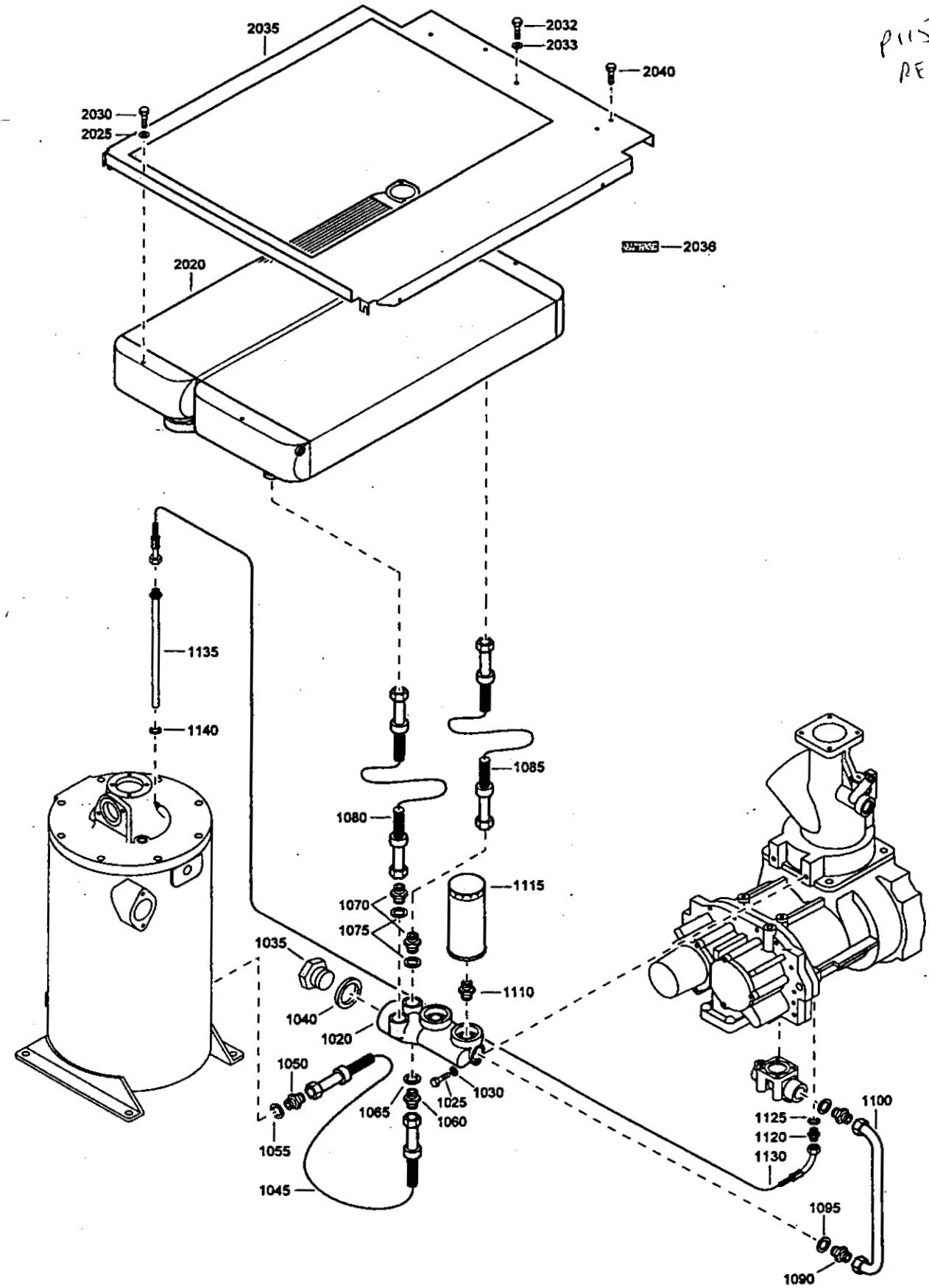

60497_05

HNF 7701

P116
REV0

Ref.	Part number	Qty	Name	Remarks
1020	1613 8043 00	1	Valve housing	
1025	0147 1402 03	2	Hexagon bolt	
1030	0301 2358 00	2	Washer	
1035	0686 3716 29	1	Hexagon plug	
1040	0661 1000 33	1	Seal washer	
1045	0574 9878 02	1	Hose assembly	
1050	0571 0035 25	1	Hexagon nipple	
1055	0661 1000 29	1	Seal washer	
1060	2250 4983 00	1	Nipple	
1065	0661 1000 30	1	Seal washer	
1070	2250 4983 00	2	Nipple	
1075	0661 1000 30	2	Seal washer	
1080	0574 9870 02	1	Hose assembly	
1085	0574 9870 03	1	Hose assembly	
1090	2250 4983 00	1	Nipple	
1095	0661 1000 30	1	Seal washer	
1100		1	Pipe	
	1613 8326 00		GA75-7.5 Direct drive	
	1613 8051 00		Others	
1110	1619 3770 00	2	Nipple	
1115	1613 6105 00	2	Oil filter	
1120		1	Nipple	
	1079 5840 07		GA75-7.5 Direct drive	
	1079 5840 01		Others	
1125		1	Seal washer	
	0661 1000 26		GA75-7.5 Direct drive	
	0661 1000 24		Others	
1130	0574 9917 06	1	Hose assembly	
1135	1613 8060 00	1	Scavenge line	
1140	0661 1000 26	1	Seal washer	
2020		1	Combicooler	
	1613 8012 00		GA55	
	1613 8678 00		GA75	
2025			Washer	
	0301 2335 00	4	GA55	
	0301 2335 00	6	GA75	
2030			Hexagon bolt	
	0147 1322 03	4	GA55	
	0147 1322 03	6	GA75	
2032		4	Hexagon bolt	
	0147 1322 03		GA75	
2033		4	Washer	
	0301 2335 00		GA75	
2035		1	Plate assembly	
	1613 8034 80		GA55	
	1613 8413 80		GA75	
2036	1619 3843 00 •	AR	Seal	
2040	1619 2766 00	4	Bolt	

HMF 7701
p 117
REVO

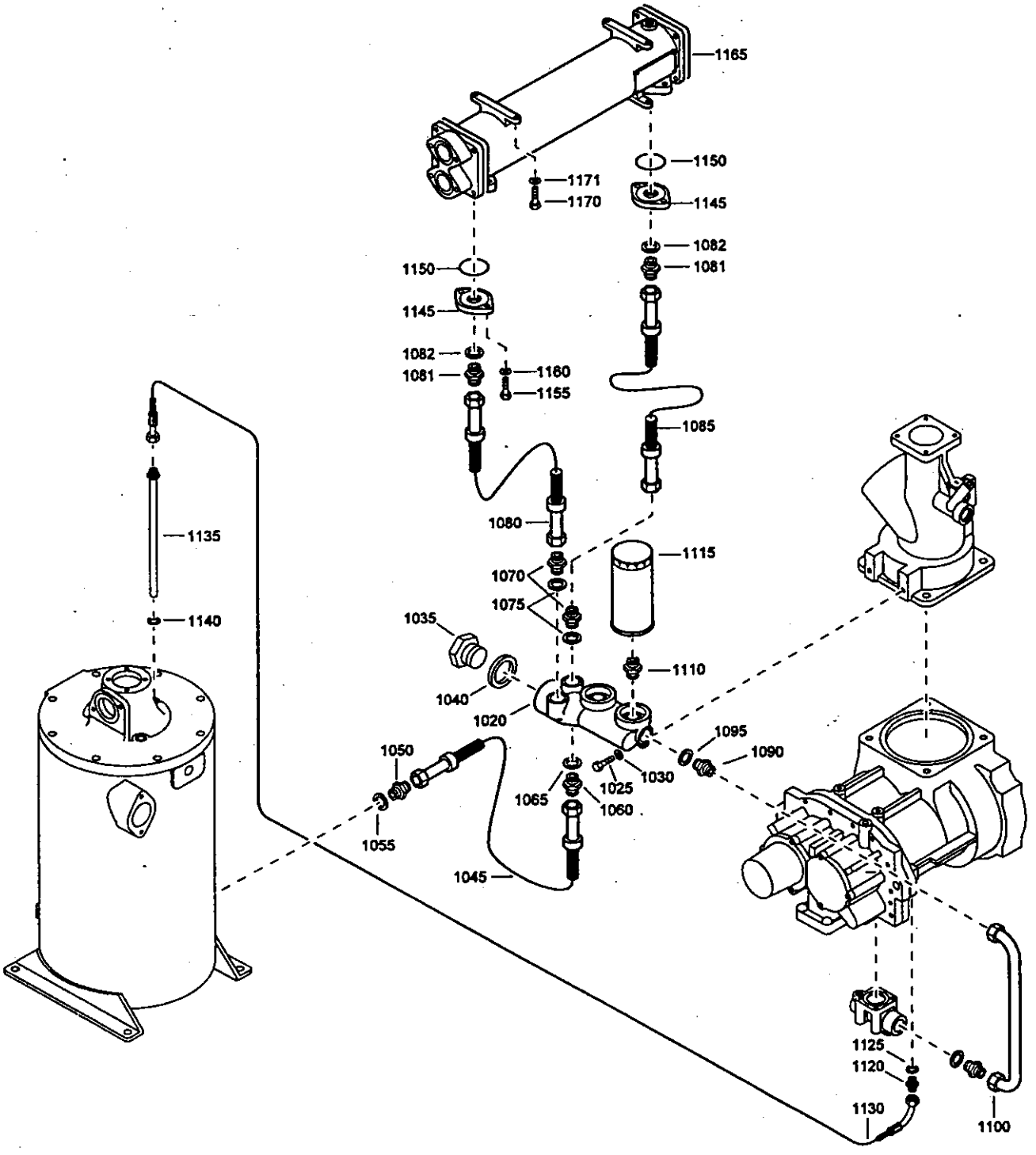

60370_05

1HNF 7701
p118
REVD

Ref.	Part number	Qty	Name	Remarks
1020	1613 8043 00	1	Valve housing	
1025	0147 1402 03	2	Hexagon bolt	
1030	0301 2358 00	2	Washer	
1035	0686 3716 29	1	Hexagon plug	
1040	0661 1000 33	1	Seal washer	
1045	0574 9878 02	1	Hose assembly	
1050	0571 0035 25	1	Hexagon nipple	
1055	0661 1000 29	1	Seal washer	
1060	2250 4983 00	1	Nipple	
1065	0661 1000 30	1	Seal washer	
1070	2250 4983 00	2	Nipple	
1075	0661 1000 30	2	Seal washer	
1080	0574 9870 02	1	Hose assembly	
1081	2250 4983 00	2	Nipple	
1082	0661 1000 30	2	Seal washer	
1085	0574 9870 02	1	Hose assembly	
1090	2250 4983 00	1	Nipple	
1095	0661 1000 30	1	Seal washer	
1100		1	Pipe	
	1613 8326 00		GA75 W-7.5 Direct drive	
	1613 8051 00		Others	

Ref.	Part number	Qty	Name	Remarks
1110	1619 3770 00	2	Nipple	
1115	1613 6105 00	2	Oil filter	
1120		1	Nipple	
	1079 5840 07		GA75 W-7.5 Direct drive	
	1079 5840 01		Others	
1125		1	Seal washer	
	0661 1000 26		GA75 W-7.5 Direct drive	
	0661 1000 24		Others	
1130	0574 9917 06	1	Hose assembly	
1135	1613 8060 00	1	Scavenge line	
1140	0661 1000 26	1	Seal washer	
1145	1613 7000 07	2	Flange	
1150	0663 7136 00	2	O-ring	
1155	0147 1402 03	4	Hexagon bolt	
1160	0301 2358 00	4	Washer	
1165	**<<< >>>**	**1**	**Oilcooler**	
1170	0147 1327 03	4	Hexagon bolt	
1171	0301 2335 00	4	Washer	

8 Oil cooler GA55 W, GA75 W

HnF 7701
A119
AW0

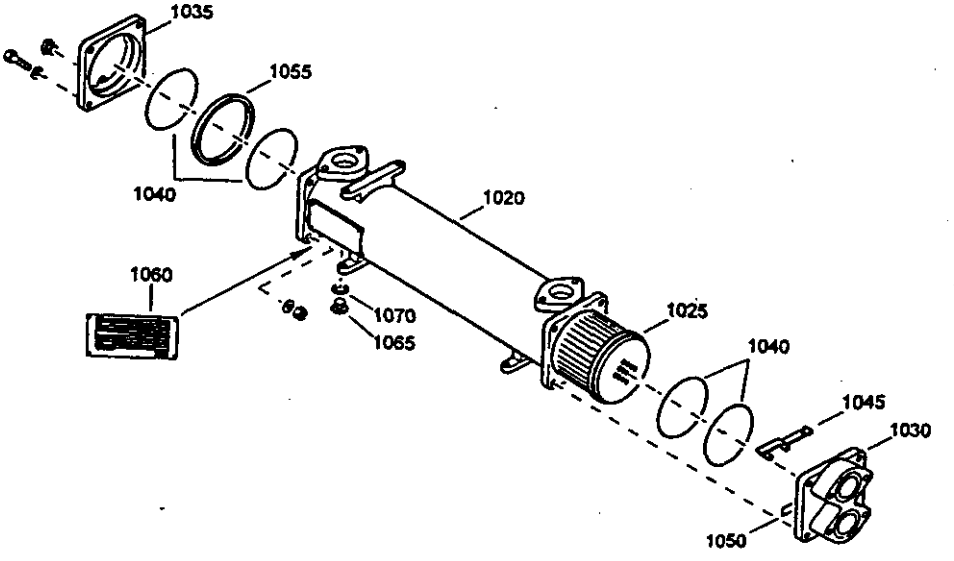

13_0006.1

Ref.	Part number	Qty	Name	Remarks
	1202 9851 88	**1**	**Oil cooler**	
1020	1613 6198 00 •	1	Cylinder	
1025	1614 6244 00 •	1	Tubestack	
1030	1614 6249 00 •	1	Water box	
1035	1614 6250 00 •	1	Return box	
1040	1614 6256 00 •	4	O-ring	
1045	1614 6258 00 •	1	Division rib	
1050	1614 6259 00 •	1	Gasket	
1055	1614 6257 00 •	1	Ring	
1060	9820 0857 00 •	1	Data plate instruction	
1065	0686 3716 02 •	1	Drain plug	
1070	0661 1033 00 •	1	Gasket	

18

Aftercooler GA55 W, GA75 W

HNF 7701
P120
REV0

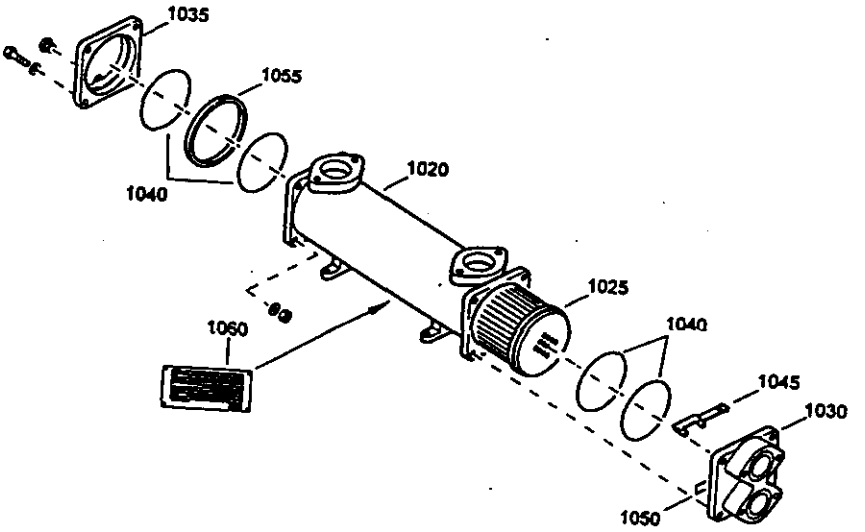

13_0004.2

Ref.	Part number	Qty	Name	Remarks
	1202 9849 88	1	Aftercooler	
1020	1613 6199 00 •	1	Cylinder	
1025	1614 6245 00 •	1	Tubestack	
1030	1614 6249 00 •	1	Water box	
1035	1614 6250 00 •	1	Return box	
1040	1614 6256 00 •	4	O-ring	
1045	1614 6258 00 •	1	Division rib	
1050	1614 6259 00 •	1	Gasket	
1055	1614 6257 00 •	1	Ring	
1060	9820 0857 00 •	1	Data plate instruction	

19

Half 7701

p 121
REVO

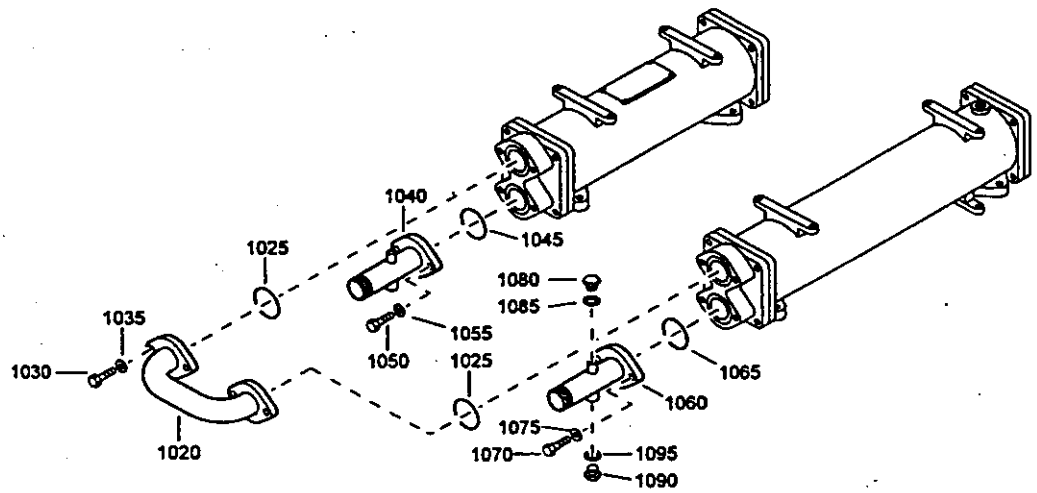

10_0030.0

Ref.	Part number	Qty	Name	Remarks
1020	1613 6991 00	1	Pipe	
1025	0663 7135 00	2	O-ring	
1030	0147 1401 03	4	Hexagon bolt	
1035	0301 2358 00	4	Washer	
1040	1613 8100 00	1	Pipe	
1045	0663 7135 00	1	O-ring	
1050	0147 1401 03	2	Hexagon bolt	
1055	0301 2358 00	2	Washer	

Ref.	Part number	Qty	Name	Remarks
1060	1613 8100 00	1	Pipe	
1065	0663 7135 00	1	O-ring	
1070	0147 1401 03	2	Hexagon bolt	
1075	0301 2358 00	2	Washer	
1080	0686 3716 01	2	Hexagon plug	
1085	0661 1000 25	2	Seal washer	
1090	0686 3716 30	1	Hexagon plug	
1095	0661 1000 26	1	Seal washer	

HNOF 7701
p 122
REV 0

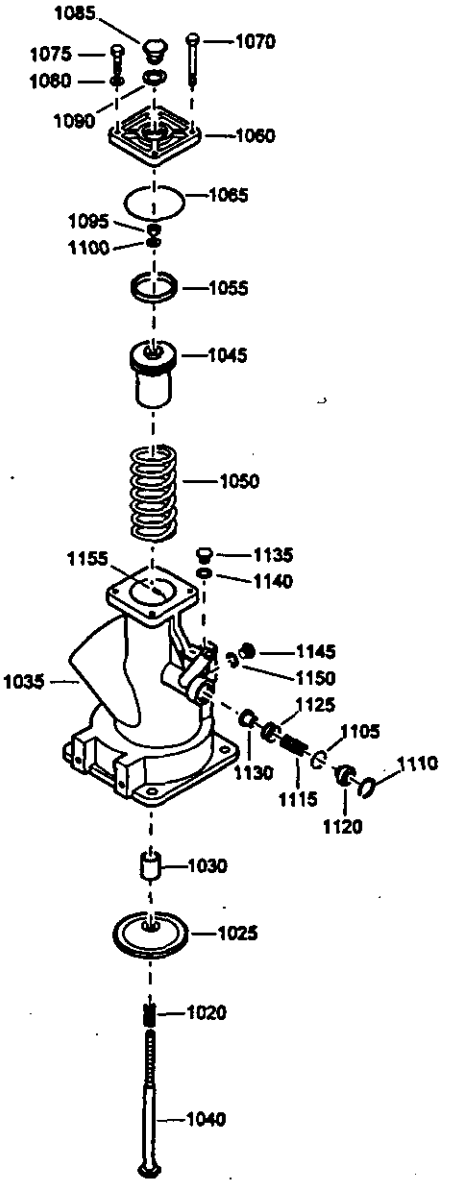

60325_20

Ref.	Part number	Qty	Name	Remarks
-		1	**Unloader valve**	
	1613 8151 80		**Modulating control**	
	1613 8150 80		**Others**	
1020	•	1	Spring	
	1613 8069 00		Modulating control	
	1613 8068 00		Others	
1025	•	1	Valve	
	1613 8071 80		Modulating control	
	1613 8072 00		Others	
1030	0500 4510 33 •	1	Plain bearing	
1035	•	1	Housing	
	1613 8151 00		Modulating control	
	1613 8150 00		Others	
1040	1613 8073 00 •	1	Piston rod	
1045	1613 8149 00 •	1	Piston	
1050	1613 7372 01 •	1	Spring	
1055	1613 7262 00 •	1	Piston ring	
1060	1613 8147 00 •	1	Cover	
1065	0663 7144 00 •	1	O-ring	
1070	0211 1963 64 •	2	Cap screw	

Ref.	Part number	Qty	Name	Remarks
1075	0211 1328 03 •	2	Cap screw	
1080	0301 2335 00 •	4	Washer	
1085	•	1	Hexagon plug	
	1613 8148 00		Modulating control	
	0686 4210 00		Others	
1090	0661 1000 32 •	1	Seal washer	
1095	0261 1090 67 •	1	Nut	
1100	0653 0500 02 •	1	Gasket	
1105	0663 7132 00 •	1	O-ring	
1110	0335 2136 00 •	1	Circlip	
1115	1513 0011 00 •	1	Spring	
1120	1613 6794 00 •	1	Cover	
1125	1613 6783 00 •	1	Piston	
1130	1613 6796 00 •	1	Valve seat	
1135	0686 3716 01 •	3	Hexagon plug	
1140	0653 0500 02 •	3	Gasket	
1145	0686 3716 38 •	3	Hexagon plug	
1150	0653 9078 00 •	3	Flat gasket	
1155	•	1	Plug	
	1613 6964 00		Modulating control	

HNF 7701
P123
REV 0

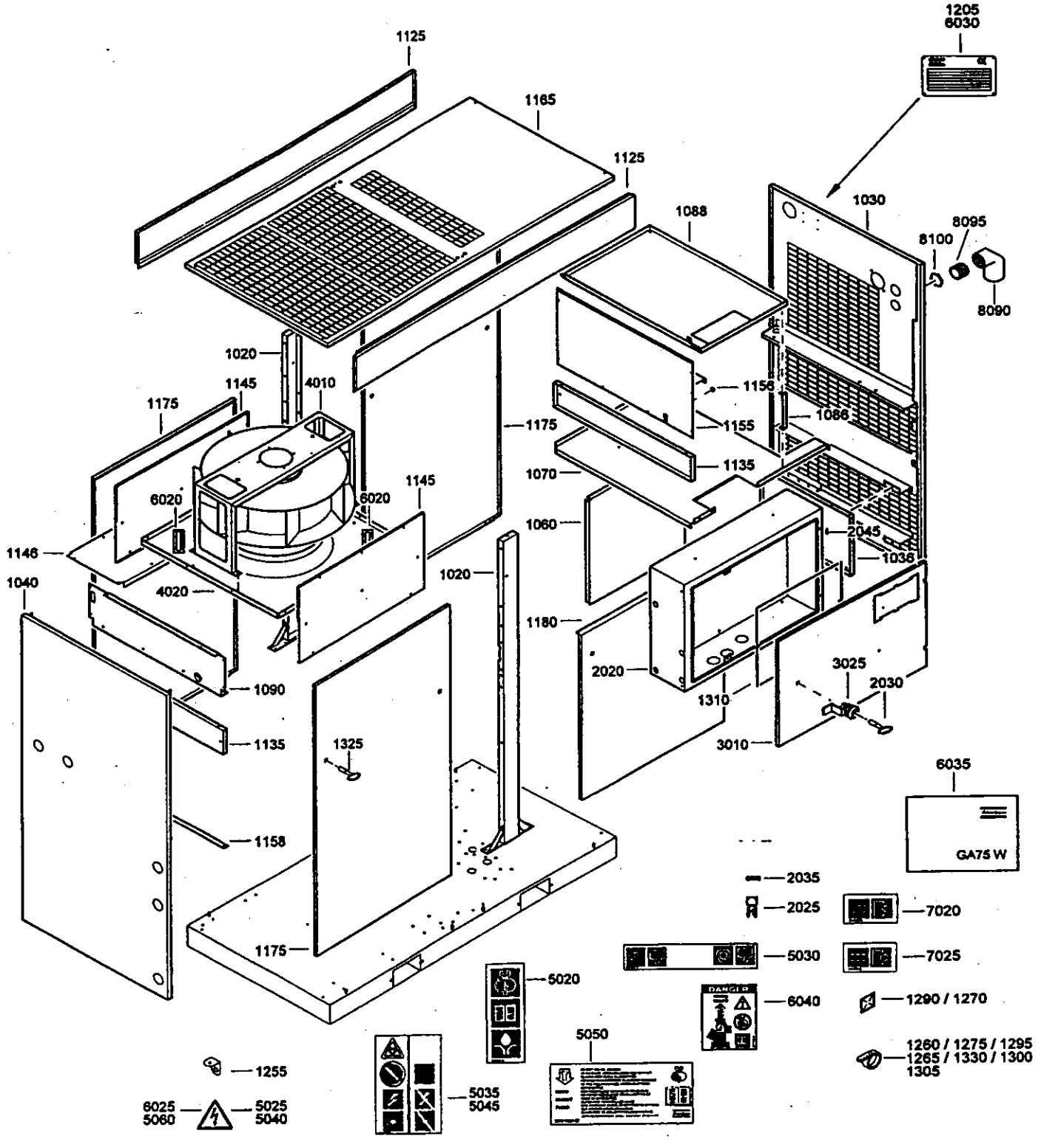

60498_10

Ref.	Part number	Qty	Name	Remarks
1020	1613 8407 00	2	Beam	
1030		1	Panel assembly	1)
	1613 8313 81		Japan	
	1613 8313 80		Others	
1036	1613 8319 80	1	Panel assembly	1)
1040	1613 8016 80	1	Panel assembly	1)
1060	1613 8315 80	1	Baffle assembly	1)
1070	1613 8314 80	1	Baffle assembly	1)
1086	1613 8316 00	2	Bracket	
1088	1613 8317 80	1	Baffle assembly	1)
1090	1613 8024 00	1	Support	
1125	1613 8020 80	2	Panel assembly	1)
	1613 8020 81		Japan	
	1613 8020 80		Others	
1135	1613 8030 00	2	Baffle	4)
1145	1613 8028 80	2	Baffle assembly	4)
1146	1613 8098 00	1	Plate	5)
1155		1	Baffle	
	1613 8063 00			4)
	1613 8143 00			5)6)
1156	1088 0801 20	1	Grommet	4)
1158	1613 8099 00	1	Plate	5)
1165	1613 8312 00	1	Roof panel	3)4)5)6)
1175	1613 8018 80	3	Door assembly	1)
1180	1613 8019 80	1	Panel assembly	1)
1205	0129 3103 00	4	Blind rivet	
1255	1613 0807 00	2	Bracket	
1260	1088 1301 02	2	Cable strip	
1265	1088 1301 02	4	Cable strip	
1270	1088 1305 01	1	Push mount	
1275	1088 1301 01	1	Cable strip	
1290	1088 1305 02	4	Push mount	
1295	1088 1301 02	4	Cable strip	
1300	1088 1301 02	3	Cable strip	
1305	1088 1301 02	2	Cable strip	
1310	1613 8096 00	1	Screen	
1325	1089 9068 01	2	Key	
1330	1088 1301 03	1	Cable strip	
2020		**1**	**Cubicle assembly**	
	1613 8021 81		**Japan**	
	1613 8021 80		**Others**	
2025	1202 6584 00 •	AR	Seal	
2030	1089 9154 02 •	1	Key	
2035	1619 3843 00 •	AR	Seal	
2045	1202 6400 00 •	2	Hinge	
3010	**1613 8022 80**	**1**	**Door assembly**	
3025	1619 7705 00 •	1	Lock	
4010		**1**	**Fan assembly**	**4)**
	1613 8309 01		230-400V/50Hz	
	1613 8309 02		500V/50Hz	
	1613 8309 08		200V/50Hz	
	1613 8309 11		220-230V/60Hz, 380V/60Hz, 440-460V/60Hz	
	1613 8309 12		575V/60Hz	
	1613 8309 14		200V/60Hz	
4020	1613 8310 00 •	1	Fan plate	
5020	1079 9901 29	1	Label	
5025	1088 1001 04	1	Warning mark	
5030	1079 9911 09	1	Inform.label	
5035	1079 9901 09	4	Label	
5040	1088 1001 03	1	Warning mark	
5045	1079 9901 09	1	Label	
5050	1079 9909 57	1	Label	
5060	1088 1001 01	1	Warning mark	
6020	1503 0786 00	2	Rotation arrow	4)
6025	1088 1001 01	1	Warning mark	4)
6030		1	Data plate	
	1613 7394 00		50Hz	CE
	1614 5933 00		60Hz	
	1613 6251 00		50Hz - 60Hz	Japan
6035		1	Decal	
	1613 8054 01		GA55	4)
	1613 8054 02		GA75	4)
	1613 8054 03		GA55W	5)
	1613 8054 04		GA75W	5)
6040		1	Warning label	
	1079 9903 82		50Hz + Japan	
	1079 9903 83		60Hz	
7020	1079 9913 79	1	Inform.label	5)
7025	1079 9913 69	1	Inform.label	5)
8090	1088 0257 30	1	Elbow	
8095	0697 9910 01	1	Nipple	
8100	1088 0301 10	1	Nut	
		AR	Bolt	
	0147 1205 03		M5 x 12 - 8.8	
	1079 1472 05		M8 x 20 - 8.8	
	1619 2766 00		M8 x 20	
	0147 1329 03		M8 x 45	
		AR	Cap screw	
	0211 1325 03		M8 x 25	
		AR	Nut	
	0266 2110 00		M8	
	1079 0298 01		M8 - Cage nut	
		AR	Washer	
	0301 2318 00		Ø 5.3 x 10 x 1	
	0301 2335 00		Ø 8.4 x 16 x 1.6	
		AR	Lockwasher	
	0333 3227 00		Ø 8.4 x 15 x 0.8	

1)-3) To be lined with / Te bekleden met / Skall bekläs med / Auskleiden mit / A garnir avec / Revestir de / Rivestire con / Skal beklædes / Forrar com / Skal föres med / Vuorataan :

1) Foam : 1079 0003 31 (AR) 25 x 2000 x 1500 self-adhesive
2) Foam : 1079 0003 33 (AR) 50 x 2000 x 1500 self-adhesive
3) Foam : 0395 1004 32 (AR) 60 x 2000 x 1500 self-adhesive
4) Air-cooled versions / Luchtgekoelde versies / Luftkylda utföranden / Luftgekühlte Ausführungen / Versions refroidies par air / Variantes refrigeradas por aire / Versioni raffreddate ad aria/ Luftkølede modeller/ Versões arrefecidas a ar/ Luftkjølte versjoner/ Ilmajäähdytteiset mallit
5) Water-cooled versions / Watergekoelde versies / Vattenkylda utföranden / Wassergekühlte Ausführungen / Versions refroidies par eau / Variantes refrigeradas por agua / Versioni raffreddate ad acqua/ Vandkølede modeller/ Versões arrefecidas a água/ Vannkjølte versjoner/ Vesijäähdytteiset mallit
6) Only for units with dryer / Enkel voor groepen met droger / Endast för aggregat med torkare / Nur für Maschinen mit Trockner / Pour groupes avec sécheur / Unicamente para unidades con secador / Solo per unità dotate di essiccatore / Kun for modeller med tørrer / Só para unidades com secador / Kun for enheter med tørkeanlegg / Vain kuivaimella varustetuille yksiköille

13

HMF 7701
P 125
REVO

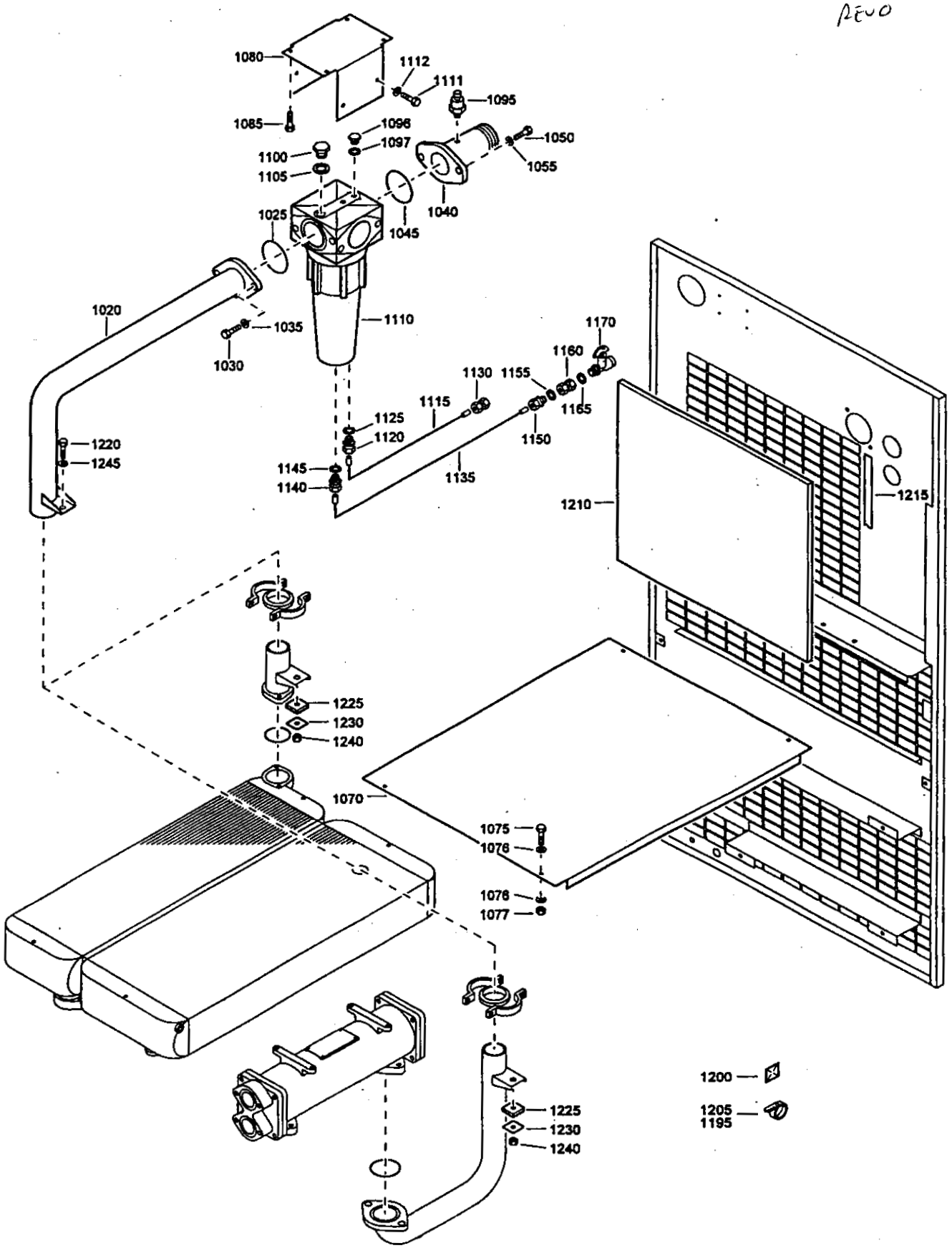

60372_06

Water separator connections - Pack version

HNF 7701
p126
REV0

Ref.	Part number	Qty	Name	Remarks
1020	1613 8049 00	1	Pipe	
1025	0663 3143 00	1	O-ring	
1030	0147 1476 03	2	Hexagon bolt	
1035	0301 2378 00	2	Washer	
1040	1613 8009 00	1	Pipe	
1045	0663 3143 00	1	O-ring	
1050	0147 1476 03	2	Hexagon bolt	
1055	0301 2378 00	2	Washer	
1070	1613 8035 80	1	Panel assembly 1)	
1075	0147 1322 03	4	Hexagon bolt	
1076	0301 2335 00	4	Washer	
1077	0266 2110 00	4	Nut	
1078	0333 3227 00	4	Lockwasher	
1080	1613 8330 00	1	Support	
1085	1619 2766 00	4	Bolt	
1095	1089 0575 41	1	Press.transducer	
1096	0686 3716 01	2	Hexagon plug	
1097	0661 1000 25	2	Seal washer	
1100	0686 3716 02	1	Hexagon plug	
1105	0661 1000 27	1	Seal washer	
1110	**1619 7474 01**	**1**	**Waterseparator**	
	2900 1017 00 •	**1**	**Drain valve**	
	0663 6147 00 ••	1	O-ring	
1111	0147 1474 03	4	Hexagon bolt	
1112	0301 2378 00	4	Washer	
1115	0070 6002 05	AR	Plastic tube	

Ref.	Part number	Qty	Name	Remarks
1120	0581 0000 35	1	Coupling	
1125	0661 1000 25	1	Seal washer	
1130	0581 0000 55	1	Pipe coupling	
1135	0070 6002 04	AR	Plastic tube	
1140	0581 0000 34	1	Coupling	
1145	0661 1000 25	1	Seal washer	
1150	0581 0000 43	1	Coupling	
1155	0661 1000 26	1	Seal washer	
1160	0581 0000 33	1	Coupling	
1165	0661 1000 24	1	Seal washer	
1170	1619 7336 00	1	Cock	
1195	1088 1301 02	2	Cable strip	
1200	1088 1305 01	5	Push mount	
1205	1088 1301 01	5	Cable strip	
1210	1613 6923 03	1	Foam	
1215	1513 0243 00	AR	Fixing strip	
1220	0147 1380 12	1	Hexagon bolt	
1225	1613 8078 02	1	Antivibration pad	
1230	1202 5452 00	1	Washer	
1240	0266 2111 00	2	Nut	
1245	0301 2344 00	2	Washer	

1) To be lined with / Te bekleden met / Skall bekläs me
Auskleiden mit / A garnir avec / Revestir de / Rivestire con / Skal beklædes med / Forrar com / Skal fôres med / Vuorataan
Anti-vibration paper: 1079 0003 31 (AR) 25 x 2000 x 1500

HNF 7701
p 127
REVO

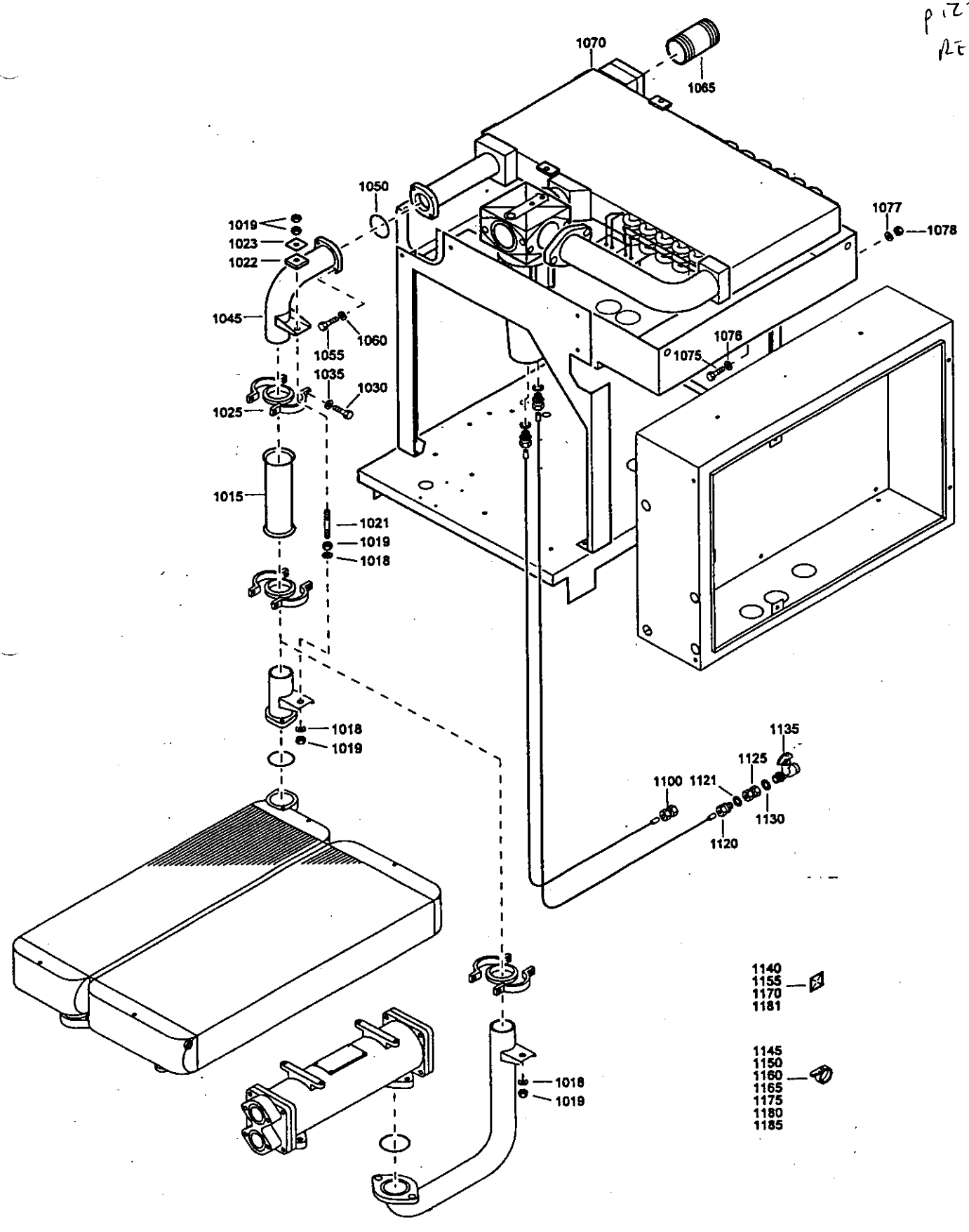

0373_17

HNF 7701
p 128
REV 0

Ref.	Part number	Qty	Name	Remarks
1015	1613 8055 00	1	Pipe	
1018	0301 2344 00	2	Washer	
1019	0266 2111 00	4	Nut	
1021	0248 9979 57	1	Threaded rod	
1022	1613 8078 02	1	Antivibration pad	
1023	1202 5452 00	1	Washer	
1025	**1613 8057 80**	**1**	**Joint set**	
	1613 8057 00 •	1	Joint	
1030	0147 1960 44	2	Hex.bolt	
1035	0301 2335 00	2	Washer	
1045	1613 8050 00	1	Pipe	
1050	0663 9868 00	1	O-ring	
1055	0147 1327 03	2	Hexagon bolt	
1060	0301 2335 00	2	Washer	
1065	0551 0001 55	1	Threaded pipe	
1070	**<<< >>>**	**1**	**Air dryer**	
1075	0147 1323 03	4	Hexagon bolt	
1076	0301 2335 00	4	Washer	
1077	0303 1274 01	4	Washer	
1078	0266 2110 00	4	Nut	
1100	0581 0000 55	1	Pipe coupling	
1120	0581 0000 43	1	Coupling	
1121	0661 1000 26	1	Seal washer	
1125	0581 0000 33	1	Coupling	
1130	0661 1000 24	1	Seal washer	
1135	1619 7336 00	1	Cock	
1140	1088 1305 02	1	Push mount	
1145	1088 1301 02	1	Cable strip	
1150	1088 1301 02	2	Cable strip	
1155	1088 1305 01	7	Push mount	
1160	1088 1301 01	7	Cable strip	
1165	1088 1301 02	2	Cable strip	
1170	1088 1305 02	1	Push mount	
1175	1088 1301 02	1	Cable strip	
1180	1088 1301 02	2	Cable strip	
1181	1088 1305 02	2	Push mount	
1185	1088 1301 02	2	Cable strip	

HNF 7701
P124
REVO

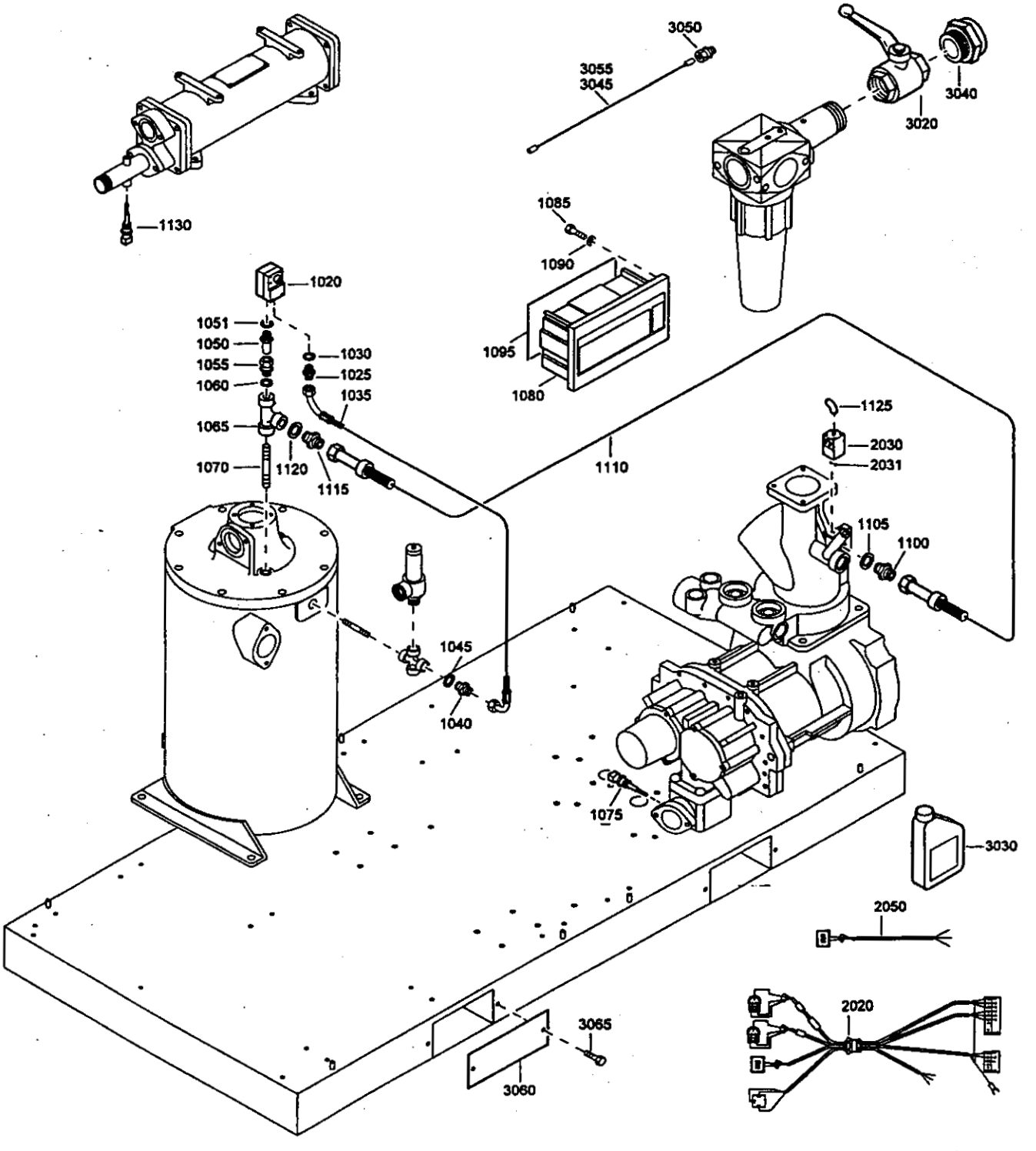

60374_09

HNF 7701
p130
REV 0

Ref.	Part number	Qty	Name	Remarks
1020	1089 0575 20	1	Dp transducer	
1025	1079 5840 01	1	Nipple	
1030	0661 1000 24	1	Seal washer	
1035	0574 9917 04	1	Hose assembly	
1040	0571 0035 05	1	Hexagon nipple	
1045	0661 1000 29	1	Seal washer	
1050	1615 3624 00	1	Nozzle	
1051	0661 1000 24	1	Seal washer	
1055	0581 0031 01	1	Pipe coupling	
1060	0661 1000 26	1	Seal washer	
1065	0564 0000 37	1	Tee	
1070	0551 0001 48	1	Threaded pipe	
1075	1089 0574 04	1	Temp.sensor	
1080	1900 0701 05	1	Regulator	
1085	0147 1205 03	4	Hexagon bolt	
1090	0301 2318 00	4	Washer	
1095	1503 2467 00	AR	Seal cord	
1100	1079 5840 03	1	Nipple	
1105	0661 1000 26	1	Seal washer	
1110	0574 9911 15	1	Hose assembly	
1115	1079 5840 03	1	Nipple	
1120	0661 1000 26	1	Seal washer	
1125	0560 1302 03	1	Elbow	
1130		1	Temp.sensor	
	1089 0574 07	1	GA55 W, GA75 W	

Ref.	Part number	Qty	Name	Remarks
2020		1	Wire harness	
	1613 8044 01		C, U	
	1613 8044 00		Others	
2030		1	Solenoid valve	
	1089 0428 20		110V/60Hz	C, U
	1089 0428 21		220V/50Hz	
	1089 0428 19		220V/60Hz	
2031	0663 2104 83 •	2	O-ring	
2050		1	Cable	
	1613 8104 00		GA55 W, GA75 W	
3020	0852 0010 20	1	Ball valve	1)
3030	1613 6532 01	1	Oil can	1)
3040	1614 5941 00	1	Adaptor	1)-(C, U)
3045	0070 6002 04	AR	Plastic tube	1)
3050	0581 0000 33	1	Coupling	1)
3055	0070 6002 05	AR	Plastic tube	1)
3060	1613 6858 80	4	Plate assembly	1)
3065	1079 2904 01	8	Push nail	1)

1) Supplied loose / Los geleverd / Levereras separat / Lose mitgeliefert / Livré séparément / Suministrado suelto / Fornito separatamente / Leveres separat / Fornecid separadamente / Leveres separat / Toimitetaan irrallisena

HNF 7101
P 131
REV 0

16

Start cubicle - star/delta - 50Hz - 60Hz

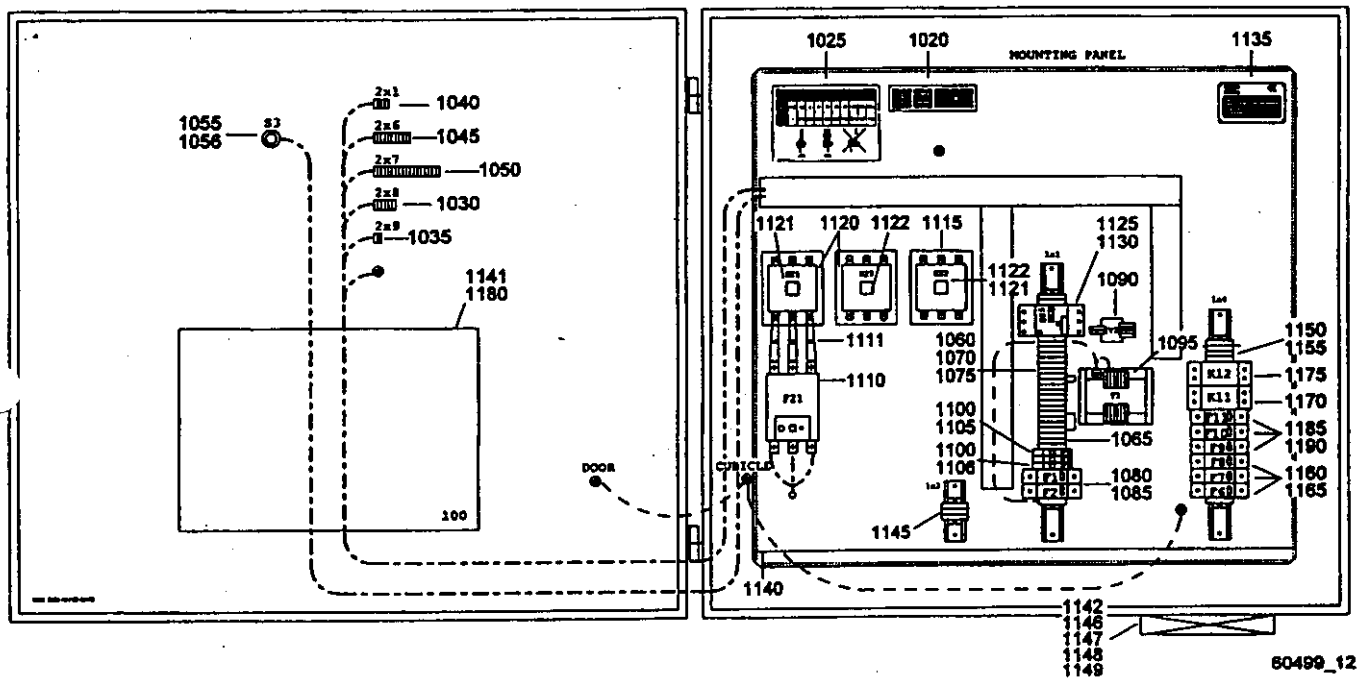

60499_12

Ref.	Part number	Qty	Name	Remarks
-		1	Cubicle	
	1900 2501 01		GA55 (W) 230V/50Hz	
	1900 2501 02		GA55 (W) 400V/50Hz	
	1900 2501 03		GA55 (W) 500V/50Hz	
	1900 2501 11		GA75 (W) 230V/50Hz	
	1900 2501 12		GA75 (W) 400V/50Hz	
	1900 2501 13		GA75 (W) 500V/50Hz	
	1900 2501 04		GA55 (W) 230V/60Hz	
30	1900 2501 05		GA55 (W) 380V/60Hz	
	1900 2501 06		GA55 (W) 460V/60Hz	
	1900 2501 14		GA75 (W) 230V/60Hz	
	1900 2501 15		GA75 (W) 380V/60Hz	
	1900 2501 16		GA75 (W) 460V/60Hz	
	1900 2501 81		GA55 (W) 200V/50Hz, GA55 (W) 200V/60Hz	
	1900 2501 82		GA75 (W) 200V/50Hz, GA75 (W) 200V/60Hz	

HNF 7701
P132
REV 0

Ref.	Part number	Qty	Name	Remarks
1020	1079 9901 68 •	1	Label	
1025	1079 9906 09 •	1	Label	
1030	1088 0000 06 •	1	Connector	(2x8)
1035	1088 0014 02 •	1	Connector	(2x9)
1040	1088 0014 04 •	1	Connector	(2x1)
1045	1088 0014 10 •	1	Connector	(2x6)
1050	1088 0014 18 •	1	Connector	(2x7)
1055	1089 0362 51 •	1	Emergency stop button	
1056	1089 0362 50 •	2	Contact block	
1060	1089 0506 27 •	3	Terminal	(2x4mm²)
1065	1089 0506 52 •	2	Terminal switch	
1070	1089 0506 64 •	1	Terminal	(10x2,5mm²)
1075	1089 0506 63 •	3	Terminal	(3x2,5mm²)
1080	1089 0612 01 •	2	Fuse holder	F1,F2
1085	•	2	Fuse	F1,F2
	1089 0612 22		2)3)9)	
	1089 0612 23		5)6)8)12)	
	1089 0612 24		1)4)7)10)11)13)14)	
1090	1089 9136 93 •	1	Transformer	T2
1095	•	1	Transformer	T1
	1089 9136 95		2)	
	1089 9136 96		1)5)	
	1089 9136 97		4)7)10)	
	1089 9436 02		3)9)	
	1089 9436 03		6)11)8)12)14)	
	1089 9436 05		13)	
1100	1089 0506 16 •	3	Fuse terminal	F3,F4,F5
1105	1089 9037 02 •	4	Fuse	F4,F5
1106	•	2	Fuse	F3
	1089 9037 02		1)4)5)6)7)8)10)11)12)13)14)	
	1089 9037 09		2)3)9)	
1110	•	1	Overload relay	F21
	1089 9174 01		14)	
	1089 9205 06		7)13)	
	1089 9205 08		4)10)	
	1089 9205 12		12)	
	1089 9205 13		5)11)	
	1089 9205 15		1)	
	1089 9424 46		3)9)	
	1089 9424 47		2)8)	
	1089 9424 48		6)	
1111	•	1	Connection	
	1089 9215 02		4)7)10)13)14)	
1115	•	1	Contactor	K22
	1089 9221 03		4)7)10)13)14)	
	1089 9415 32		2)3)9)	
	1089 9415 41		5)6)8)12)	
	1089 9415 42		1)11)	
1120	•	2	Contactor	K21,K23
	1089 9221 03		1)5)11)12)	
	1089 9221 30		4)7)13)	
	1089 9221 96		10)14)	
	1089 9415 41		2)3)9)	
	1089 9415 42		6)8)	
1121	•		Contact block	
	1089 9415 07	3	2)3)6)8)9)	K21,K22
	1089 9415 07	1	1)11)	K22
	1089 9415 07	1	5)12)	K21,K22
	1089 9213 03	1	13)14)	K21
1122	•		Contact block	
	1089 9415 08	3	2)3)6)8)9)	K22,K23
	1089 9415 08	1	1)11)	K22
	1089 9415 08	1	5)12)	K22,K23
1125	•	1	Circuit breaker	Q15
	1089 9416 26		2)5)	
	1089 9416 27		9)11)12)	
	1089 9416 29		1)4)7)10)	
	1089 9416 30		13)14)	
	1089 9416 66		3)6)	
	1089 9416 67		8)	
1130	1089 9416 01 •	1	Contact block	Q15
1135	1613 6639 00 •	1	Data plate	
1140	1613 8023 00 •	1	Plate	
1141	9820 2323 31 •	1	Service diagram	16)
1142	•	1	Plug & cable	
	1089 0388 12		13)14)	
1145	•	1	Terminal	(3x35mm²)
	1089 0506 04		9)12)	
1146	•	1	Fan	
	1089 0388 21		13)14)	
1147	•	2	Filter	
	1089 0388 31		13)14)	
1148	•	2	Gasket	
	1089 0388 33		13)14)	
1149	•	1	Grating	
	1089 0388 34		13)14)	
-	**1900 2600 01**	**1**	**Dryer rail**	**(1x4)**
1150	1089 0506 62 •	2	Terminal	(1x2,5mm²)
1155	1089 0506 27 •	2	Terminal	(2x4mm²)
1160	1089 0612 01 •	3	Fuse holder	F6,F7,F8
1165	1089 0612 29 •	3	Fuse	F6,F7,F8
1170	1089 9319 51 •	1	Contactor	K11
1175	1089 9319 86 •	1	Contactor	K12
1180	9820 2323 05 •	1	Service diagram	16)
1185	•	3	Fuse holder	F9,F10,F11
	1089 0612 01			3)6)8)11)15)
1190	•	3	Fuse	F9,F10,F11
	1089 0612 29			3)6)8)11)15)

1) GA55 (W) 230V/50Hz
2) GA55 (W) 400V/50Hz
3) GA55 (W) 500V/50Hz
4) GA75 (W) 230V/50Hz
5) GA75 (W) 400V/50Hz
6) GA75 (W) 500V/50Hz
7) GA55 (W) 230V/60Hz
8) GA55 (W) 380V/60Hz
9) GA55 (W) 460V/60Hz
10) GA75 (W) 230V/60Hz
11) GA75 (W) 380V/60Hz
12) GA75 (W) 460V/60Hz
13) GA55 (W) 200V/50Hz, GA55 (W) 200V/60Hz
14) GA75 (W) 200V/50Hz, GA75 (W) 200V/60Hz
15) Only for dryers with transfo / Enkel voor drogers met transfo / Endast för torkare med transformator / Nur für Trockner mit Transfo / Uniquement pour sécheurs avec transformateur / Sólo para secadores dotados de transformador / Solo per gli essiccatori con il trasformatore / Kun for tørrere med transfo / Somente para secadores com transformador / Bare på tørkere med transformator / Vain muuntajalla varustetuissa kuivaimissa
16) Supplied loose / Los geleverd / Levereras separat / Lose mitgeliefert / Livré séparément / Suministrado suelto / Fornito separatamente / Leveres separat / Fornecido separadamente / Leveres separat / Toimitetaan irrallisena

21

HMF-7701
p133
REVD

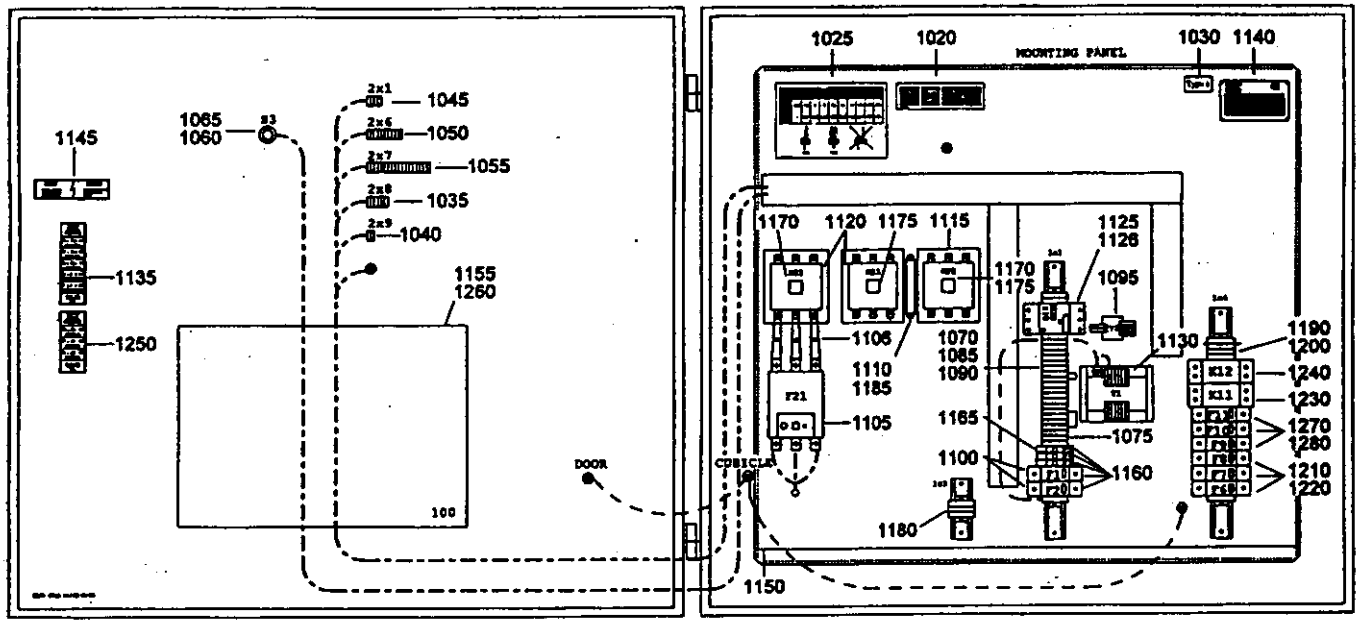

60500_12

HNF 7701
P134
REV0

Ref.	Part number		Qty	Name	Remarks
-			1	**Cubicle**	**C,U**
	1900 2501 51			GA55 (W) 230V/60Hz	
	1900 2501 52			GA55 (W) 460V/60Hz	
	1900 2501 53			GA55 (W) 575V/60Hz	
	1900 2501 61			GA75 (W) 230V/60Hz	
	1900 2501 62			GA75 (W) 460V/60Hz	
	1900 2501 63			GA75 (W) 575V/60Hz	
1020	1079 9901 68	•	1	Label	
1025	1079 9906 09	•	1	Label	
1030	1079 9911 01	•	1	Label	
1035	1088 0000 06	•	1	Connector	(2x8)
1040	1088 0014 02	•	1	Connector	(2x9)
1045	1088 0014 04	•	1	Connector	(2x1)
1050	1088 0014 10	•	1	Connector	(2x6)
1055	1088 0014 18	•	1	Connector	(2x7)
1060	1089 0362 51	•	1	Emergency stop button	
1065	1089 0362 50	•	1	Contact block	
1070	1089 0506 27	•	3	Terminal	(2x4mm²)
1075	1089 0506 52	•	2	Terminal switch	
1085	1089 0506 63	•	3	Terminal	(3x2,5mm²)
1090	1089 0506 64	•	1	Terminal	(10x2,5mm²)
1095	1089 9136 27	•	1	Transformer	T2
1100		•	2	Fuse link	F1,F2
	1089 9168 24			1)2)3)5)6)	
	1089 9168 25			4)	
1105		•	1	Overload relay	F21
	1089 9205 05			1)	
	1089 9424 47			2)6)	
	1089 9424 46			3)	
	1089 9174 01			4)	
	1089 9205 12			5)	
1106		•	1	Connection	
	1089 9215 02			4)	
1110		•	1	Interlock	
	1089 9216 03			1)4)5)	
	1089 9415 10			2)3)6)	
1115		•	1	Contactor	K22
	1089 9221 48			1)	
	1089 9415 44			2)3)6)	
	1089 9221 49			4)	
	1089 9221 44			5)	
1120		•	2	Contactor	K21,K23
	1089 9221 49			1)	
	1089 9415 45			2)	
	1089 9415 44			3)	
	1089 9221 50			4)	
	1089 9221 48			5)	
	1089 9415 46			6)	
1125		•	1	Circuit breaker	Q15
	1089 9416 29			1)4)	
	1089 9416 27			2)5)	
	1089 9416 26			3)6)	
1126	1089 9416 01	•	1	Contact block	Q15

Ref.	Part number		Qty	Name	Remarks
1130		•	1	Transformer	T1
	1089 9436 04			1)	
	1089 9436 03			2)5)6)	
	1089 9436 02			3)	
	1089 9436 05			4)	
1135		•	1	Label	
	1202 7982 00			1)2)3)5)6)	
	1202 7983 00			4)	
1140	1613 3046 00	•	1	Data plate	
1145	1613 3431 00	•	1	Label	
1150	1613 8023 00	•	1	Plate	
1155	9820 2323 32	•	1	Service diagram	8)
1160	1089 9049 04	•	5	Fuse holder	F1,F2,F3,F4,F5
1165	1089 9168 02	•	3	Fuse link	F3,F4,F5
1170		•	3	Contact block	K21,K22
	1089 9415 07			2)3)6)	
1175		•	3	Contact block	K22,K23
	1089 9415 08			2)3)6)	
1180		•	1	Terminal	(3x35mm²)
	1089 0506 04			2)5)	
1185	1089 9415 90	•	1	Interlock device	
-	**1900 2600 05**		1	**Dryer rail**	**(1x4)**
1190	1089 0506 62	•	2	Terminal	(1x2,5mm²)
1200	1089 0506 27	•	2	Terminal	(2x4mm²)
1210	1089 9049 04	•	3	Fuse holder	F6,F7,F8
1220	1089 9168 60	•	3	Fuse link	F6,F7,F8
1230	1089 9319 37	•	1	Contactor	K11
1240	1089 9319 35	•	1	Contactor	K12
1250	1202 7984 00	•	1	Label	
1260	9820 2323 05	•	1	Service diagram	8)
1270		•	3	Fuse holder	F9,F10,F11
	1089 9049 04			3)6)7)	
1280		•	3	Fuse link	F9,F10,F11
	1089 9168 60			3)6)7)	

1) GA55 (W) 230V/60Hz
2) GA55 (W) 460V/60Hz
3) GA55 (W) 575V/60Hz
4) GA75 (W) 230V/60Hz
5) GA75 (W) 460V/60Hz
6) GA75 (W) 575V/60Hz
7) Only for dryers with transfo / Enkel voor drogers met transfo / Endast för torkare med transformator / Nur für Trockner mit Transfo / Uniquement pour sécheurs avec transformateur / Sólo para secadores dotados de transformador / Solo per gli essiccatori con il trasformatore / Kun for tørrere med transfo / Somente para secadores com transformador / Bare på tørkere med transformator / Vain muuntajalla varustetuissa kuivaimissa
8) Supplied loose / Los geleverd / Levereras separat / Lose mitgeliefert / Livré séparément / Suministrado suelto / Fornito separatamente / Leveres separat / Fornecido separadamente / Leveres separat / Toimitetaan irrallisena

HNF-7701
P135
REV0

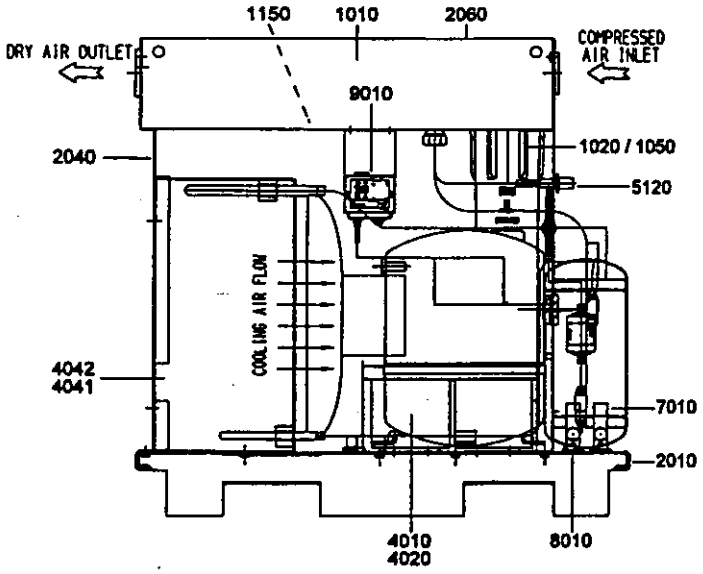

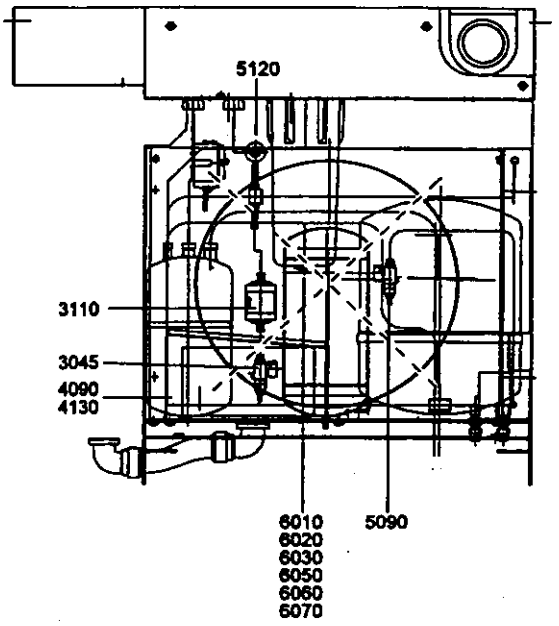

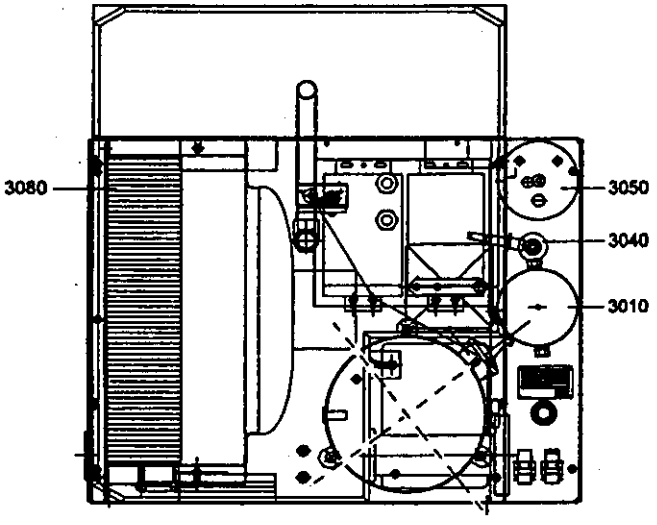

60501_17

HNF 7701
p 136
REV 0

Ref.	Part number	Qty	Name	Remarks
		1	**Air dryer**	
1010	1617 1062 00	1	Heat exchanger	
1020	**1619 7459 01**	1	**Waterseparator**	
	2900 1017 00 •	1	**Drain valve**	
	0663 6147 00 ••	1	O-ring	
1050	0663 3143 00	2	O-ring	
1150	1089 0575 41	1	Pressure sensor	
2010	1617 1057 80	1	Frame	1)
2040	1617 1059 80	1	Support	1)
2060	1617 1061 80	1	Box heat exchanger	
3010	1617 1942 00	1	Liquid receiver	
3040	1617 0123 00	1	Stop valve	
3045	1619 6774 01	1	Valve	
3050	1617 0708 00	1	Liquid separator	
3080	1617 0950 00	1	Condensor	
3110	1619 5566 07	1	Refrigerant dryer	
4010		1	Refrigerant compressor	
	1619 7767 14		ID160 230V/50Hz	
	1619 7767 15		ID160 380-415V/50Hz, ID160 500V/50Hz, ID160 380V/60Hz, ID160 440-460V/60Hz, ID160 575V/60Hz	
	1619 7767 16		ID160 230V/60Hz, ID160 200V/50Hz, ID160 200V/60Hz	
	1614 7168 11		ID230 230V/50Hz	
	1614 7168 12		ID230 380-415V/50Hz, ID230 440-460V/60Hz	
	1614 7168 15		ID230 230V/60Hz, ID230 200V/50Hz, ID230 200V/60Hz	
	1614 7168 17		ID230 380V/60Hz	
	1614 7168 19		ID230 500V/50Hz, ID230 575V/60Hz	
4020	1619 7689 01	1	Carter heating	
		1	**Fan assy**	
	1617 2057 80		ID160 230V/50Hz, ID160 380-415V/50Hz, ID160 500V/50Hz, ID160 440-460V/60Hz, ID160 575V/60Hz, ID230 230V/60Hz, ID230 380-415V/50Hz, ID230 440-460V/60Hz	
	1617 2058 80		ID160 230V/60Hz, ID160 380V/60Hz, ID230 380V/60Hz	
	1617 2090 80		ID160 200V/50Hz, ID160 200V/60Hz, ID230 200V/50Hz, ID230 200V/60Hz	
	1617 2091 80		ID230 500V/50Hz, ID230 575V/60Hz	

Ref.	Part number	Qty	Name	Remarks
4041	•	1	Fan + Motor	
	1617 2057 00		ID160 230V/50Hz, ID160 380-415V/50Hz, ID160 500V/50Hz, ID160 440-460V/60Hz, ID160 575V/60Hz, ID230 230V/60Hz, ID230 380-415V/50Hz, ID230 440-460V/60Hz	
	1617 2058 00		ID160 230V/60Hz, ID160 380V/60Hz, ID230 380V/60Hz	
	1617 2090 00		ID160 200V/50Hz, ID160 200V/60Hz, ID230 200V/50Hz, ID230 200V/60Hz	
	1617 2091 00		ID230 500V/50Hz, ID230 575V/60Hz	
4042	1617 2059 00 •	1	Grating	
4090		2	Transformer	
	1089 9204 01		ID160 500V/50Hz, ID160 575V/60Hz	
4130		1	Service diagram	
	9827 0328 00		ID160 500V/50Hz, ID160 575V/60Hz	
5090	1619 5563 02	1	Schraderventiel	
5120		1	Expansion valve	
	1619 6768 15		ID160	
	1619 6768 18		ID230	
6010	0653 1062 00	1	Flat gasket	
6020	0581 0000 34	1	Drain connection	
6030	0070 6002 04	AR	Tube	
6050	0661 1020 00	1	Flat gasket	
6060	0581 0000 35	1	Drain connection	
6070	0070 6002 05	AR	Hose	
7010	1089 9214 32	1	Pressure switch	
8010	1089 9214 33	1	Pressure switch	
9010	1089 9214 08	1	Pressure switch T	

1) To be lined with / Te bekleden met / Skall bekläs med / Auskleiden mit / A garnir avec / Revestir de / Rivestire con / Skal beklædes med / Forrar com / Skal fôres med / Vuorataan
Anti-vibration paper: 1079 0003 31 (AR) 25 x 2000 x 1500

HMF 7701
P137
REV6

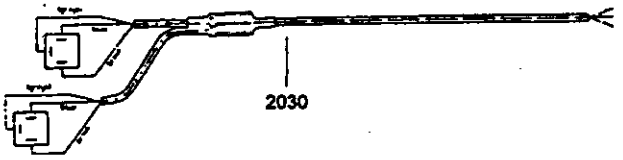

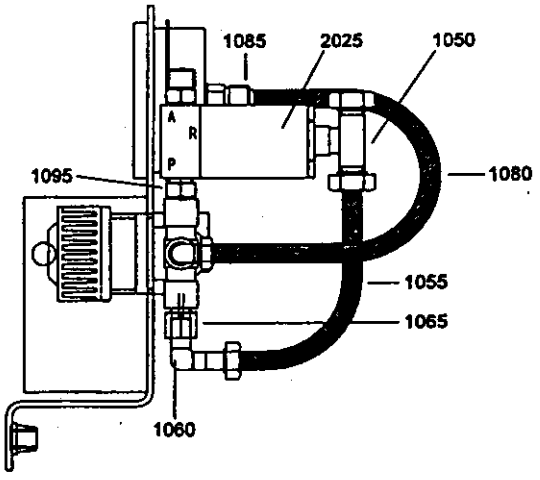

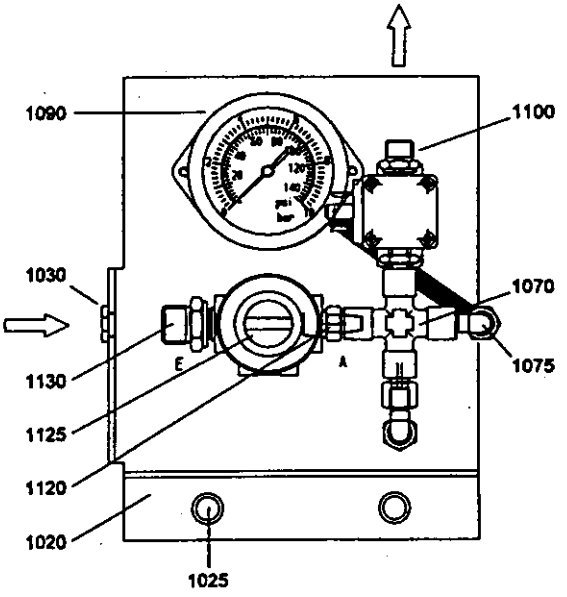

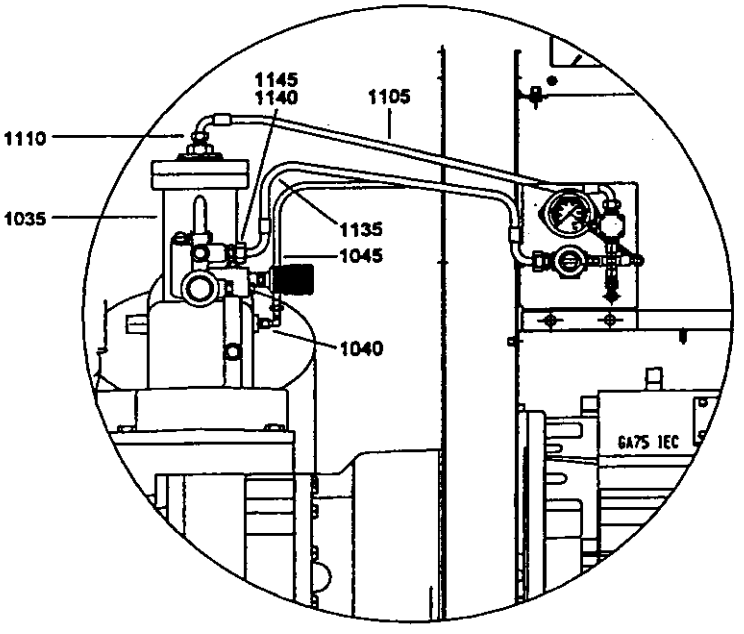

60331_20

HMF 7701
P 138
REVO

Ref.	Part number	Qty	Name	Remarks
1020	1613 8080 00	1	Support	
1025	1619 2766 00	3	Bolt	
1030	0266 2110 00	1	Nut	
1035	**<<< >>>**	**1**	**Unloader (modulating control)**	
1040	0581 1200 23	1	Elbow coupling	
1045	0070 6002 05	AR	Plastic tube	
1050	0581 2000 27	1	Pipe coupling	
1055	0070 6002 05	AR	Plastic tube	
1060	0581 1200 26	1	Elbow coupling	
1065	1613 6968 06	1	Nozzle	
1070	0560 4400 85	1	Cross	
1075	0581 1200 16	1	Coupling(elbow)	
1080	0070 6002 04	AR	Plastic tube	
1085	0580 8402 00	1	Pipe coupling	
1090	1513 0480 00	1	Pressure gauge	
1095	1503 2564 01	1	Nipple	

Ref.	Part number	Qty	Name	Remarks
1100	1079 5840 25	1	Hexagon nipple	
1105	0574 9914 10	1	Hose assembly	
1110	1079 5840 25	1	Hexagon nipple	
1120	1503 2564 10	1	Nipple	
1125	1613 6961 00	1	Regulator	
1130	1079 5840 23	1	Nipple	
1135	0574 9914 09	1	Hose assembly	
1140	1079 5840 14	1	Nipple	
1145	0661 1000 26	1	Seal washer	
2025		1	Solenoid valve	
	1089 0392 27		115V/60Hz	C, U
	1089 0392 26		220V/60Hz	
	1089 0392 25		220V/50Hz	
2030		1	Cable	
	1613 8116 00		C, U	
	1613 8115 00		Others	

HNF 7701
p.39
REVO

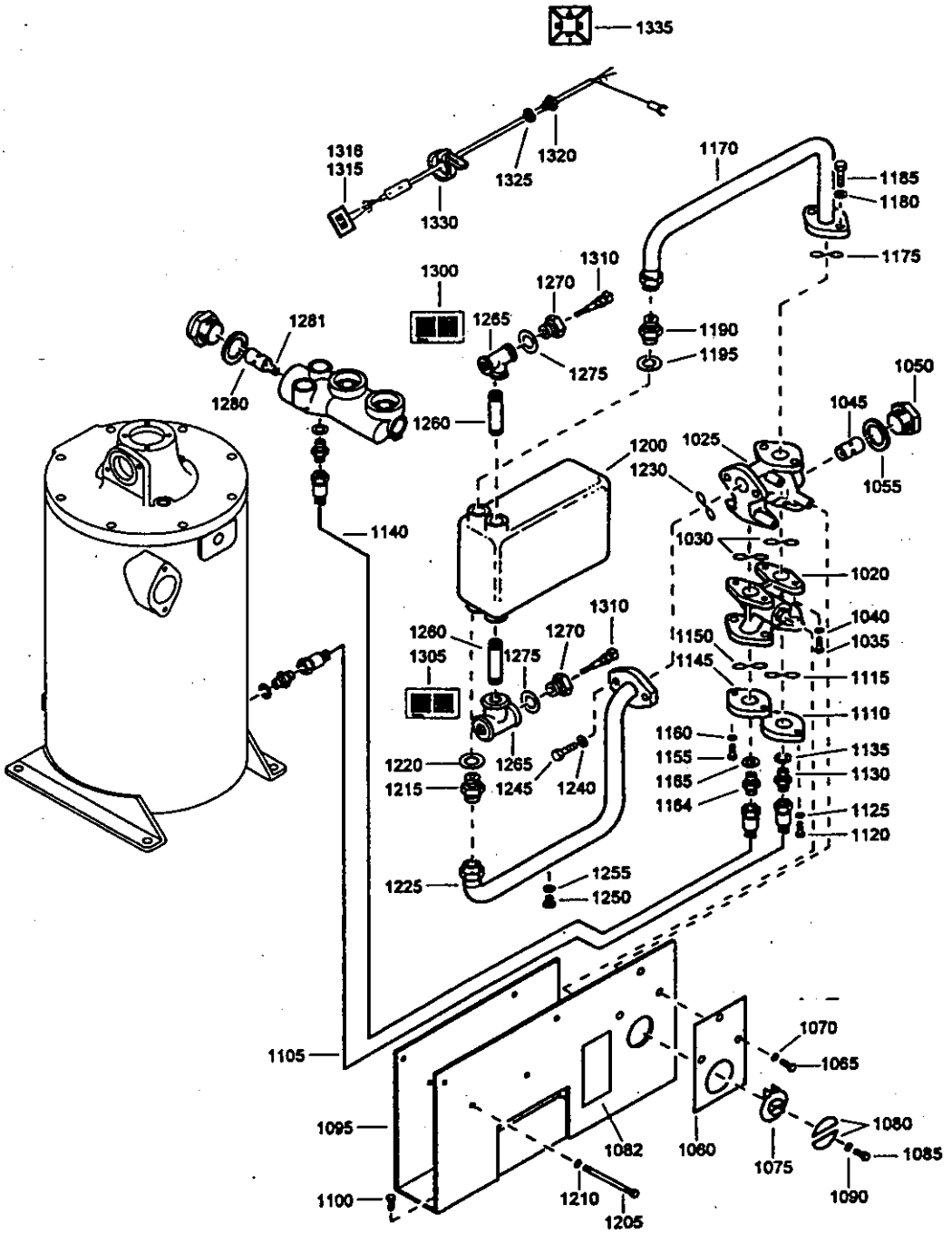

60378_15

HNF 7701
p 140
REV 0

Ref.	Part number	Qty	Name	Remarks
1020	1202 5896 00	1	4-way valve	
1025	1202 5907 00	1	Therm.housing	
1030	0663 3132 00	2	O-ring	
1035	0147 1363 03	4	Hexagon bolt	
1040	0301 2344 00	4	Washer	
1045	1619 7333 00	1	Thermostat	
1050	0686 4209 00	1	Hexagon plug	
1055	0661 1000 31	1	Seal washer	
1060	1202 5925 00	1	Decal	
1065	0147 1321 03	3	Hexagon bolt	
1070	0301 2335 00	3	Washer	
1075	1202 5926 00	1	Handle	
1080	1202 5927 00	2	Decal	
1082	1079 9902 89	1	Warning label	
1085	0147 1321 03	1	Hexagon bolt	
1090	0301 2335 00	1	Washer	
1095	1613 8321 00	1	Support	
1100	1619 2766 00	4	Bolt	
1105	0574 9878 03	1	Hose assembly	
1110	1613 7000 07	1	Flange	
1115	0663 7136 00	1	O-ring	
1120	0147 1363 03	2	Hexagon bolt	
1125	0301 2344 00	2	Washer	
1130	2250 4983 00	1	Nipple	
1135	0661 1000 30	1	Seal washer	
1140	0574 9878 04	1	Hose assembly	
1145	1613 7000 07	1	Flange	
1150	0663 7136 00	1	O-ring	
1155	0147 1363 03	2	Hexagon bolt	
1160	0301 2344 00	2	Washer	
1164	2250 4983 00	1	Nipple	
1165	0661 1000 30	1	Seal washer	
1170	1613 8093 00	1	Pipe	
1175	0663 7134 00	1	O-ring	
1180	0301 2344 00	2	Washer	
1185	0147 1363 03	2	Hexagon bolt	
1190	2250 4983 00	1	Nipple	
1195	0661 1000 30	1	Seal washer	
1200	1613 7634 00	1	Heat exchanger	
1205	0147 1344 03	4	Hexagon bolt	
1210	0301 2335 00	4	Washer	
1215	2250 4983 00	1	Nipple	
1220	0661 1000 30	1	Seal washer	
1225	1613 8092 00	1	Pipe	
1230	0663 3132 00	1	O-ring	
1240	0302 1274 01	2	Washer	
1245	0147 1363 03	2	Hexagon bolt	
1250	0686 3716 01	1	Hexagon plug	
1255	0661 1000 25	1	Seal washer	
1260	0551 0001 60	2	Pipe	
1265	0564 0000 29	2	Tee	
1270	0605 8700 51	2	Bushing	
1275	0661 1000 30	2	Seal washer	
1280		**1**	**Thermostatic valve 1)**	
	1202 5869 01		**70-85°C**	
	1202 5869 02		**60-75°C**	
	1202 5869 03		**65-80°C**	
	1202 5869 04		**75-90°C**	
1281	1202 5868 00 •	1	Spring	
1300	1079 9913 69	1	Inform.label	
1305	1079 9913 79	1	Inform.label	
1310	1089 0574 07	2	Temp.sensor	
1315	1613 7193 04	1	Cable	
1316	1613 7193 05	1	Cable	
1320	0698 5101 00	2	Cable gland	
1325	0697 9802 00	2	Nut	
1330	1088 1301 03	10	Cable strip	
1335	1088 1305 01	5	Push mount	

1) Supplied loose / Los geleverd / Levereras separat / Lose mitgeliefert / Livré séparément / Suministrado suelto / Fornito separatamente / Leveres separat / Fornecidc separadamente / Leveres separat / Toimitetaan irrallisena

HNF 7701
P141
REV 0

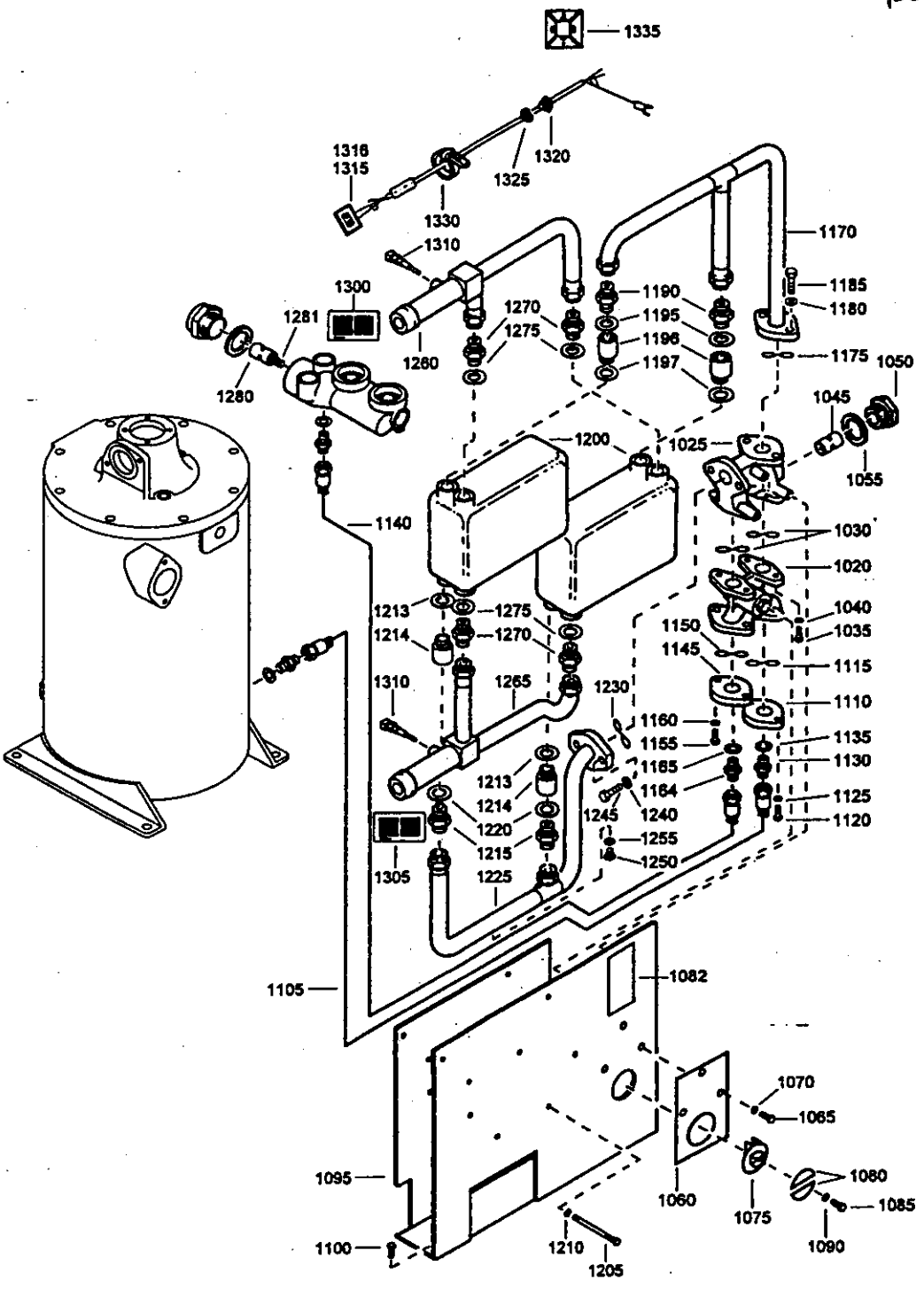

60379_15

Heat recovery system (Optional) - GA75, GA75 W

HNF 7701
P142
REV0

Ref.	Part number	Qty	Name	Remarks
1020	1202 5896 00	1	4-way valve	
1025	1202 5907 00	1	Therm.housing	
1030	0663 3132 00	2	O-ring	
1035	0147 1363 03	4	Hexagon bolt	
1040	0301 2344 00	4	Washer	
1045	1619 7333 00	1	Thermostat	
1050	0686 4209 00	1	Hexagon plug	
1055	0661 1000 31	1	Seal washer	
1060	1202 5925 00	1	Decal	
1065	0147 1321 03	3	Hexagon bolt	
1070	0301 2335 00	3	Washer	
1075	1202 5926 00	1	Handle	
1080	1202 5927 00	2	Decal	
1082	1079 9902 89	1	Warning label	
1085	0147 1321 03	1	Hexagon bolt	
1090	0301 2335 00	1	Washer	
1095	1613 8328 00	1	Support	
1100	1619 2766 00	4	Bolt	
1105	0574 9878 03	1	Hose assembly	
1110	1613 7000 07	1	Flange	
1115	0663 7136 00	1	O-ring	
1120	0147 1363 03	2	Hexagon bolt	
1125	0301 2344 00	2	Washer	
1130	2250 4983 00	1	Nipple	
1135	0661 1000 30	1	Seal washer	
1140	0574 9878 04	1	Hose assembly	
1145	1613 7000 07	1	Flange	
1150	0663 7136 00	1	O-ring	
1155	0147 1363 03	2	Hexagon bolt	
1160	0301 2344 00	2	Washer	
1164	2250 4983 00	1	Nipple	
1165	0661 1000 30	1	Seal washer	
1170	1613 8088 00	1	Pipe	
1175	0663 7134 00	1	O-ring	
1180	0301 2344 00	2	Washer	
1185	0147 1363 03	2	Hexagon bolt	
1190	2250 4983 00	2	Nipple	
1195	0661 1000 30	2	Seal washer	
1196	1613 8106 00	2	Bush	
1197	0661 1000 30	2	Seal washer	
1200	1613 7634 00	2	Heat exchanger	
1205	0147 1344 03	8	Hexagon bolt	
1210	0301 2335 00	8	Washer	
1213	0661 1000 30	2	Seal washer	
1214	1613 8106 00	2	Bush	
1215	2250 4983 00	2	Nipple	
1220	0661 1000 30	2	Seal washer	
1225	1613 8087 00	1	Pipe	
1230	0663 3132 00	1	O-ring	
1240	0302 1274 01	2	Washer	
1245	0147 1363 03	2	Hexagon bolt	
1250	0686 3716 01	1	Hexagon plug	
1255	0661 1000 25	1	Seal washer	
1260	1613 8089 00	1	Pipe	
1265	1613 8090 00	1	Pipe	
1270	2250 4983 00	4	Nipple	
1275	0661 1000 30	4	Seal washer	
1280		**1**	**Thermostatic valve 1)**	
	1202 5869 01		**70-85°C**	
	1202 5869 02		**60-75°C**	
	1202 5869 03		**65-80°C**	
	1202 5869 04		**75-90°C**	
1281	1202 5868 00 •	1	Spring	
1300	1079 9913 69	1	Inform.label	
1305	1079 9913 79	1	Inform.label	
1310	1089 0574 07	2	Temp.sensor	
1315	1613 7193 04	1	Cable	
1316	1613 7193 05	1	Cable	
1320	0698 5101 00	2	Cable gland	
1325	0697 9802 00	2	Nut	
1330	1088 1301 03	10	Cable strip	
1335	1088 1305 01	5	Push mount	

1) Supplied loose / Los geleverd / Levereras separat / Lose mitgeliefert / Livré séparément / Suministrado suelto / Fornito separatamente / Leveres separat / Fornecido separadamente / Leveres separat / Toimitetaan irrallisena

HNF 7701
PIH3
REV 0

INTENTIONALLY
BLANK

HNF 7701
144 Rev
p ~~148~~ 3/26/01
REV D

Ref.	Part number	Qty	Name	Remarks
1020	1613 8079 00	1	Support	
1025	1619 2766 00	2	Bolt	
1030	1613 8341 01	1	Bekomat 13 230V	
1035	0605 8814 06	1	Bushing	
1040	0581 1200 14	1	Elbow coupling	
1045	1613 7720 08	1	Pipe	
1050	0581 0000 37	1	Pipe coupling	
1055	0661 1000 27	1	Seal washer	
1060	1619 6153 04	1	Ball valve	
1065	0661 1000 27	1	Seal washer	
1070	0581 0000 53	1	Straight pipe coupling	
1075	0070 6002 06	AR	Plastic tube	
1080	0581 0000 45	1	Pipe coupling	
1085	0661 1000 25	2	Seal washer	
1090	1613 8084 00	1	Pipe coupling	
1095	0070 6002 05	AR	Plastic tube	
1100	0581 0000 35	1	Coupling	
1105	0661 1000 25	2	Seal washer	
1110	0852 0010 11	1	Ball valve	
1115	0581 0028 01	1	Pipe coupling	
1120	1613 8108 01	1	Pipe	
1125	0581 1228 04	1	Elbow	
1130	0605 8814 06	1	Bushing	
1135	0607 3000 13	1	Reducer	
1140	0581 1200 23	1	Elbow coupling	
1141	0070 6002 05	AR	Plastic tube	
2030	0584 0080 10	1	Cutting ring	

HNF 7701
P145
REV0

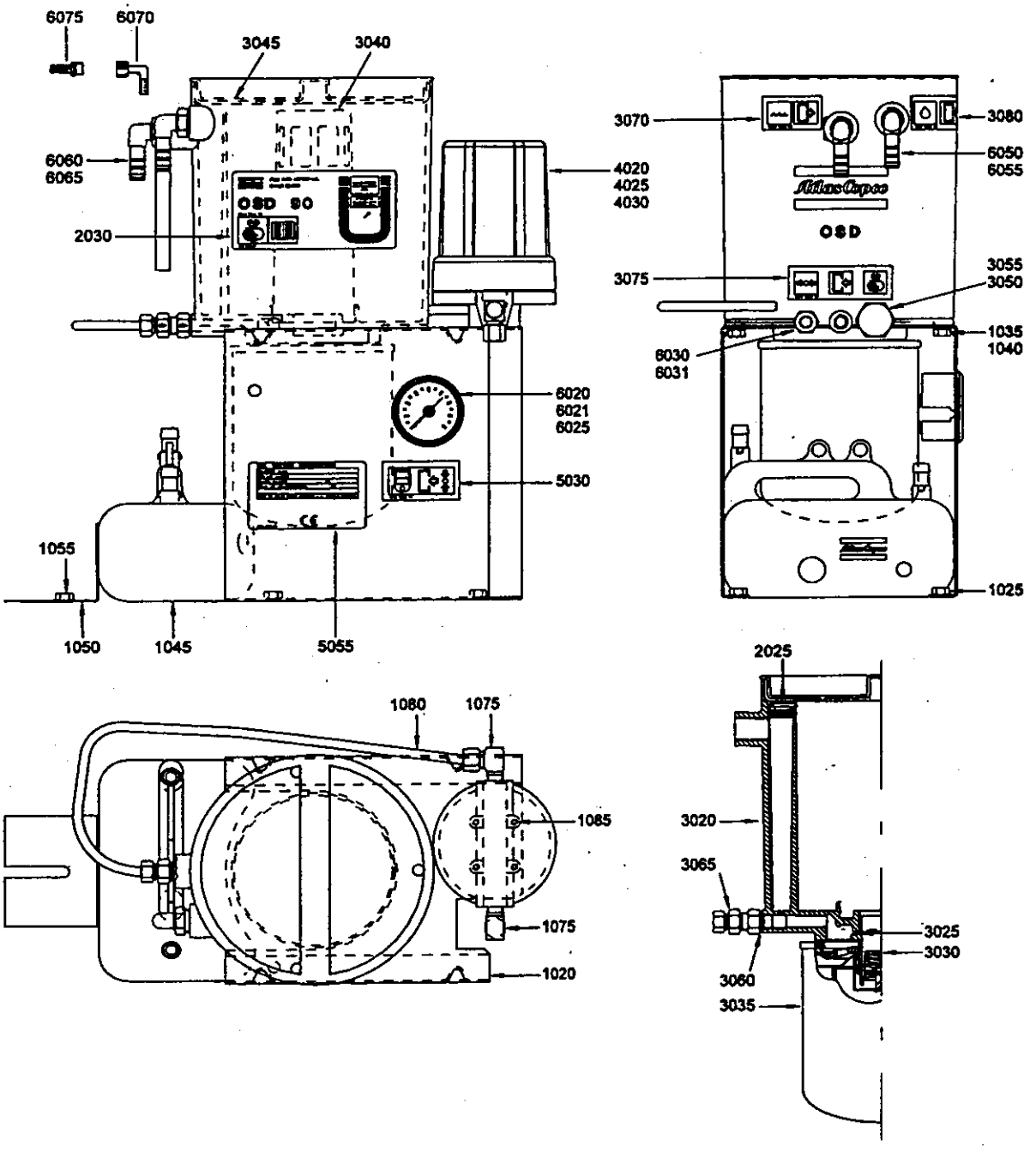

60460_07

HNF 7701
p 146
REV 0

Ref.	Part number	Qty	Name	Remarks
1020	1613 8109 00	1	Support	
1025	1619 2766 00	2	Bolt	
1035	0147 1322 03	3	Hexagon bolt	
1040	0301 2335 00	3	Washer	
1045	1613 7300 00	1	Oil can	
1050	1613 7327 00	1	Support	
1055	1619 2766 00	1	Bolt	
1075	0581 1200 37	2	Pipe coupling	
1080	0070 6002 05	AR	Plastic tube	
1085	0226 0326 00	4	Tapping screw	
	1613 7301 81	**1**	**OSD assembly**	
2025	1613 7945 00 •	1	Plug	
2030	1079 9909 07 •	1	Label	
	1613 7301 80 •	**1**	**OSD assembly**	
3020	1613 7301 00 ••	1	Oil-water separator	
3025	0661 1054 00 ••	1	Tredo washer	
3030	1613 7297 00 ••	1	Valve	
3035	1613 7277 00 ••	1	Oilfilter	
3040	1613 7299 00 ••	1	Filter	
3045	1613 7298 00 ••	1	Cover	
3050	0653 9098 00 ••	1	Flat gasket	
3055	0686 3716 02 ••	1	Hexagon plug	

Ref.	Part number	Qty	Name	Remarks
3060	0653 0500 02 ••	1	Gasket	
3065	1613 7378 00 ••	1	Strainer	
3070	1079 9913 69 ••	1	Information label	
3075	1079 9912 07 ••	1	Decal	
3080	1079 9912 28 ••	1	Decal	
	1613 7865 80	**1**	**Filter assembly**	
4020	1613 7864 00 •	1	Filter element	
4025	1613 7865 00 •	1	Filter housing	
4030	0663 2104 06 •	1	O-ring	
5030	1079 9912 11	1	Decal	
5055	1613 7384 00	1	Data plate	
6020	1615 7264 00	1	Pressure gauge	
6021	0584 9904 00	2	Sleeve	
6025	0070 6002 04	AR	Plastic tube	
6030	0581 2024 32	1	Coupling	
6031	0653 0500 47	1	Gasket	
6050	1613 7985 00	1	Nipple	
6055	0070 6002 14	AR	Plastic tube	
6060	1613 7985 00	1	Nipple	
6065	0070 6002 14	AR	Plastic tube	
6070	1613 7342 00	1	Elbow coupling	
6075	1613 7341 00	1	Pipe coupling	

Part number		Qty	Name	Remarks
2901 0406 00		**1**	**Element mounting kit Direct drive GA55 (W)-7.5-8 Direct drive GA75 (W)-7.5**	
2904 0109 00	•	1	Lipseal kit	
0663 7147 00	•	1	O-ring	
0663 2106 43	•	1	O-ring	
0663 2104 03	•	1	O-ring	
0663 7135 00	•	1	O-ring	
0663 7138 00	•	2	O-ring	
0653 1046 00	•	1	Flat gasket	
0663 3128 00	•	1	O-ring	
0663 3132 00	•	1	O-ring	
0661 1000 26	•	1	Seal washer	
0147 1409 03	•	1	Hexagon bolt	
0337 5229 00	•	1	Parallel key	
1613 8280 00	•	1	Coupling element	
0301 2378 00	•	6	Washer	
0333 3237 00	•	6	Lockwasher	
0663 2106 19	•	2	O-ring	
0663 3120 00	•	1	O-ring	
1613 8057 00	•	2	Joint	
1613 8078 01	•	2	Antivibration pad	
0291 1111 00	•	2	Locknut	
0301 2358 00	•	2	Washer	
0301 2335 00	•	4	Washer	
0661 1000 24	•	1	Seal washer	
0686 6132 00	•	1	Plug	
0686 6126 00	•	1	Plug	
0663 2104 03	•	1	O-ring	
2901 0407 00		**1**	**Element mounting kit Gearbox drive GA55 (W)-10-13, GA55 (W)-100-125-150-175**	
2904 0070 00	•	1	Lipseal kit	
0663 7147 00	•	2	O-ring	
1202 7022 00	•	1	Gasket	
0506 0100 09	•	1	Bearing	
0508 1100 32	•	1	Bearing	
1202 6737 00	•	1	Key	
0147 1409 03	•	1	Hexagon bolt	
0663 2106 43	•	1	O-ring	
0663 2104 03	•	1	O-ring	
0663 7135 00	•	1	O-ring	
0663 7138 00	•	2	O-ring	
0653 1046 00	•	1	Flat gasket	
0663 3128 00	•	1	O-ring	
0663 3132 00	•	1	O-ring	
0661 1000 26	•	1	Seal washer	
0337 2293 23	•	1	Parallel key	
1613 8280 00	•	1	Coupling element	
0301 2378 00	•	6	Washer	
0333 3237 00	•	6	Lockwasher	
0663 2106 19	•	2	O-ring	
0663 3120 00	•	1	O-ring	
1613 8057 00	•	2	Joint	
1613 8078 01	•	2	Antivibration pad	
0291 1111 00	•	2	Locknut	
0301 2358 00	•	2	Washer	
0301 2335 00	•	4	Washer	
0661 1000 24	•	1	Seal washer	
0301 2344 00	•	2	Washer	
2901 0408 00		**1**	**Element mounting kit Gearbox drive GA75 (W)-8-10-13, GA75 (W)-100-125-150-175**	
2904 0070 00	•	1	Lipseal kit	
1202 7022 00	•	1	Gasket	
0506 0100 09	•	1	Bearing	
0508 1100 32	•	1	Bearing	
1202 6737 00	•	1	Key	
0147 1409 03	•	2	Hexagon bolt	
0663 2106 43	•	1	O-ring	
0663 2104 03	•	1	O-ring	
0663 7135 00	•	1	O-ring	
0663 7138 00	•	2	O-ring	
0653 1046 00	•	1	Flat gasket	
0663 3128 00	•	1	O-ring	
0663 3132 00	•	1	O-ring	
0661 1000 26	•	1	Seal washer	
0337 2293 23	•	1	Parallel key	
1615 4185 00	•	1	Coupling element	
0301 2378 00	•	6	Washer	
0333 3237 00	•	6	Lockwasher	
0663 2106 19	•	2	O-ring	
0663 3120 00	•	1	O-ring	
1613 8057 00	•	2	Joint	
1613 8078 01	•	2	Antivibration pad	
0291 1111 00	•	2	Locknut	
0301 2358 00	•	2	Washer	
0301 2335 00	•	4	Washer	
0661 1000 24	•	1	Seal washer	
0301 2344 00	•	2	Washer	
2901 0432 00		**1**	**Oil separator kit**	
1613 8007 00	•	1	Oil separator element	
0663 7175 00	•	2	O-ring	
0663 7138 00	•	1	O-ring	
1613 8057 00	•	1	Joint	
0661 1000 26	•	2	Seal washer	
0661 1000 24	•	1	Seal washer	
2901 0073 00		**1**	**Moisture trap kit**	
2900 1017 00	•	1	Drain valve	
0663 6147 00	•	1	O-ring	
0663 3143 00	•	2	O-ring	
0653 1062 00	•	2	Flat gasket	
0661 1000 25	•	1	Seal washer	
0663 7138 00	•	1	O-ring	
0653 1124 00	•	1	Flat gasket	
0661 1000 27	•	1	Seal washer	
2901 0416 00			**Filter kit GA55 (W)**	
1613 7408 00	•	1	Air filter element	
0661 1000 27	•	2	Seal washer	
0661 1000 25	•	1	Seal washer	
1613 6105 00	•	2	Oil filter	
0663 2102 15	•	1	O-ring	
2901 0431 00			**Filter kit GA75 (W)**	
1613 8004 00	•	1	Air filter element	
0661 1000 27	•	2	Seal washer	
0661 1000 25	•	1	Seal washer	
1613 6105 00	•	2	Oil filter	
0663 2102 15	•	1	O-ring	

Service kits

Part number		Qty	Name	Remarks
2901 0218 00		1	**Minimum pressure valve kit**	
0663 7138 00	•	2	O-ring	
1614 4662 00	•	2	Piston ring	
0663 3133 00	•	1	O-ring	
1613 3223 01	•	1	Washer	
1612 4049 00	•	1	Compr.spring	
0663 7136 00	•	3	O-ring	
1612 4048 00	•	1	Compr.spring	
0335 3111 00	•	1	Retaining ring	
0663 7134 00	•	1	O-ring	
0301 2344 00	•	4	Washer	
2901 0077 00		1	**Check valve kit**	
1202 6139 00	•	1	Valve	
1613 5165 00	•	1	Spring	
0663 2104 03	•	1	O-ring	
0663 7138 00	•	1	O-ring	
0661 1000 25	•	1	Seal washer	
0301 2358 00	•	2	Washer	
2901 0074 00		1	**Thermostatic valve kit 7.5-8-10 bar(e), 100-125-150 psig**	
1619 7560 00	•	1	Thermost.valve	
0661 1000 33	•	1	Seal washer	
2901 0447 00		1	**Thermostatic valve kit 13 bar(e), 175 psig**	
1202 5869 02	•	1	Thermost.valve	
0661 1000 33	•	1	Seal washer	
2901 0072 00		1	**Oil stop valve kit**	
0663 2101 97	•	2	O-ring	
0663 2100 24	•	1	O-ring	
0663 7135 00	•	1	O-ring	
0663 3120 00	•	1	O-ring	
0663 3128 00	•	1	O-ring	
0653 1046 00	•	2	Flat gasket	
1613 2357 00	•	1	Compr.spring	
0663 3132 00	•	1	O-ring	
0653 1062 00	•	1	Flat gasket	
0661 1000 29	•	1	Seal washer	
0661 1000 30	•	2	Seal washer	
0661 1000 27	•	1	Seal washer	
2901 0448 00		1	**Unloader valve kit**	
0261 1090 67	•	1	Nut	
0653 0500 02	•	4	Gasket	
0663 7142 00	•	1	O-ring	
1613 6783 00	•	1	Piston	
1613 8072 00	•	1	Valve	
1513 0011 00	•	1	Spring	
0653 9078 00	•	3	Flat gasket	
0663 7132 00	•	1	O-ring	
1613 8068 00	•	1	Spring	
1613 7262 00	•	1	Piston ring	
0663 2106 43	•	1	O-ring	
0301 2378 00	•	4	Washer	
0301 2358 00	•	2	Washer	
0661 1000 26	•	1	Seal washer	
0663 2104 83	•	2	O-ring	
1079 9903 82	•	1	Warning label	
1079 9903 83	•	1	Warning label	
0661 1000 32	•	1	Seal washer	
0663 7144 00	•	1	O-ring	

Part number		Qty	Name	Remarks
2901 0245 01		1	**Oil can** ROTO-INJECTFLUID 5 l	
2901 0522 00		1	**Oil can** ROTO-INJECTFLUID 20 l	
2901 0045 01		1	**Oil barrel** ROTO-INJECTFLUID 209 l	
2901 0097 00		1	**Oil cooler kit GA55 W, GA75 W**	
0333 3237 00	•	8	Lockwasher	
0661 1000 27	•	1	Seal washer	
0661 1000 30	•	2	Seal washer	
0663 3132 00	•	1	O-ring	
0663 7134 00	•	2	O-ring	
0663 7135 00	•	4	O-ring	
0663 7136 00	•	2	O-ring	
1614 6256 00	•	4	O-ring	
1614 6257 00	•	1	Ring	
1614 6258 00	•	1	Division rib	
1614 6259 00	•	1	Rib joint	
2901 0098 00		1	**Aftercooler kit GA55 W, GA75 W**	
0333 3237 00	•	8	Lockwasher	
1614 6257 00	•	1	Ring	
1614 6259 00	•	1	Rib joint	
1614 6258 00	•	1	Division rib	
1614 6256 00	•	4	O-ring	
0663 7138 00	•	3	O-ring	
0663 3143 00	•	1	O-ring	
0663 7135 00	•	4	O-ring	
0663 7139 00	•	2	O-ring	
2901 0449 00			**Preventive maintenance kit GA55 (W)**	
2901 0416 00	•	1	**Filter kit GA55 (W)**	
2901 0432 00	•	1	**Separator kit**	
2901 0072 00	•	1	**Oil stop valve kit**	
2901 0073 00	•	1	**Water separator kit**	
2901 0077 00	•	1	**Check valve kit**	
2901 0218 00	•	1	**Minimum pressure valve kit**	
2901 0448 00	•	1	**Unloader valve**	
2901 0450 00		1	**Preventive maintenance kit GA75 (W)**	
2901 0431 00	•	1	**Filter kit GA75 (W)**	
2901 0432 00	•	1	**Separator kit**	
2901 0072 00	•	1	**Oil stop valve kit**	
2901 0073 00	•	1	**Water separator kit**	
2901 0077 00	•	1	**Check valve kit**	
2901 0218 00	•	1	**Minimum pressure valve kit**	
2901 0448 00	•	1	**Unloader valve**	

Notes:

MNF 1101
PING RENO

HNP 7701

P 150
REVD

RETTLEDNING (no)

BESTILLING AV DELER
Oppgi alltid delenummeret, betegnelsen på og mengden av de aktuelle delene samt maskintype og maskinens serienummer.
2 FORKLARING TIL KOLONNENE
Ref. - Referansenummer
Knytter en del i listen til tegningen. Deler uten referansenummer vises ikke på tegningen.
Part No. - Delenummer
Hvis det ikke er angitt et delenummer, kan delen ikke bestilles som en separat reservedel.
En del med et nummer som etterfølges av en svart prikk, inngår i enheten like ovenfor som er oppført med halvfet skrift.
Merk: Enheter står oppført med halvfet skrift i alle kolonner.
"<<<>>>" henviser til en annen liste.
Når delenummeret til én eller flere bestemte deler er plassert under referanse/betegnelseslinjen, må man velge riktig del i forhold til maskintype/-modell.
Qty
Angir hvor mange deler som er forbundet med referansenummeret. "AR" står for "As required" = "etter behov", dvs. at bulkmateriale eller mengde må spesifiseres.
Name: Betegnelse
Oversettelsene av de engelske delebetegnelsene finnes i trykksak nr. 2930 1214 00.
Remarks - Anmerkninger
Deler som hører til vedlikeholdssett er angitt med K1, K2...
Deler i et vedlikeholdssett kan være fordelt på flere lister.
En bokstav kan tilkjennegi at delen er sertifisert i henhold til de oppførte kodene eller regelverket til det autoriserte organet som er angitt. Hvis bokstaven står i hakeparentes, er ikke selve delen sertifisert, men den må brukes på enheter som er sertifisert av det autoriserte organet. Mål er angitt i millimeter.
3 AUTORISERTE ORGANER: Se teksten ovenfor.

BRUGSANVISNING (da)

1 BESTILLING AF DELE
Opgiv altid reservedelsnummer, betegnelse og det antal der ønskes, samt maskinens typebetegnelse og serienummer.
2 FORKLARING TIL SPALTER
Ref. - Referencenummer.
Henviser til en del i fortegnelse og på tegning. Dele uden referencenr. vises ikke på tegningen.
Part No. - Nummer på del.
Hvis nummer på del ikke er opgivet, fås delen ikke som reservedel. En del, hvor nr. efterfølges af en sort prik indgår i den enhed der er anført med fed skrift lige ovenover.
Bemærk: I alle spalter er enheder angivet med fed skrift.
"<<<>>>" henviser til en anden fortegnelse.
Når delnummeret/numrene på en eller flere specifikke dele er anført under reference/betegnelse linien, skal der vælges i.h.t. maskinens type/model.
Qty - Antal.
Angiver antal dele der indgår i referencenummeret. "AR" betyder "as required" = som kræves: omfang eller antal skal bestemmes.
Name: Oversættelse af de engelske navne for delene findes i tryksag nr. 2930 1214 00.
Remarks
Dele der indgår i Service Kits betegnes med K1, K2...
Dele til et Service Kit kan findes fordelt på flere sider.
Et bogstav kan referere til, at en del er blevet certificeret i.h.t. de forskrifter eller regler, som er opstillet af det godkendende selskab; hvis et bogstav står i parentes er selve delen ikke klassificeret men skal bruges på enheder, der er godkendt af det godkendende selskab. Mål er opgivet i milimeter.
3 GODKENDENDE SELSKABER: Se ovenstående engelske tekst.

ΟΔΗΓΙΕΣ ΧΡΗΣΗΣ (el)

ΠΑΡΑΓΓΕΛΙΑ ΑΝΤΑΛΛΑΚΤΙΚΩΝ
Πα αναφέρετε πάντα τον αριθμό ανταλλακτικού, την περιγραφή και την ποσότητα των ανταλλακτικών που ζητάτε καθώς και τον τύπο και τον αριθμό σειράς του μηχανήματος.
ΕΠΕΞΗΓΗΣΗ ΤΩΝ ΣΤΗΛΩΝ
Ref.– Αριθμός αναφοράς (παραπομπής)
Συσχετίζει ένα ανταλλακτικό σε ένα κατάλογο ή σχεδιάγραμμα. Ανταλλακτικά χωρίς αριθμό αναφοράς δεν φαίνονται στο σχεδιάγραμμα.
Part No. - Αριθμός ανταλλακτικού
Αν δεν δίδεται αριθμός ανταλλακτικού, αυτό το εξάρτημα δεν παραδίδεται σαν ανταλλακτικό. Ένα ανταλλακτικό του οποίου ο αριθμός ακολουθείται από μια παύση τελεία είναι σημάδι του έντονα τυπωμένου συνόλου αμέσως από πάνω.
Σημείωση: Ένα σύνολο τοποθετείται έντονα σε όλες τις στήλες.
"<<< >>>" παραπέμπει στο να συμβουλευτείτε μια άλλη λίστα όταν ο αριθμός ανταλλακτικού (-ών) συγκεκριμένου εξαρτήματος (-ών) τοποθετούνται κάτω από γραμμή αναφοράς/ονόματος, πρέπει να γίνει επιλογή βάσει του τύπου του μηχανήματος.
Qty – Ποσότητα
Δείχνει την ποσότητα των ανταλλακτικών που σχετίζονται με τον αριθμό αναφοράς. "AR" σημαίνει "όπως απαιτείται": όγκος υλικού ή ποσότητα προς προσδιορισμόν.
Name: Μεταφράσεις των αγγλικών ονομάτων ανταλλακτικών μπορούν να βρεθούν στο τυπο Αρ. 2930 1214 00
Παρατηρήσεις
Ανταλλακτικά που ανήκουν σε πακέτα ανταλλακτικών συντήρησης προσδιορίζονται ως K1, K2, ...
Τα ανταλλακτικά μιας εργαλειοθήκης συντήρησης μπορεί να κατανέμονται σε διαφορετικές λίστες.
Ένα γράμμα υποδεικνύει ότι ένα ανταλλακτικό είναι πιστοποιημένο σύμφωνα με τους κώδικες ή τους κανόνες των εξουσιοδοτημένων οργανισμών. Αν ένα γράμμα βρίσκεται μέσα σε παρένθεση ή αγκύλες το ανταλλακτικό αυτό δεν είναι πιστοποιημένο από εξουσιοδοτημένους οργανισμούς.. Οι διαστάσεις είναι σε χιλιοστά.
ΕΞΟΥΣΙΟΔΟΤΗΜΕΝΟΙ ΟΡΓΑΝΙΣΜΟΙ: Βλέπε αγγλικό κείμενο άνω

INSTRUÇÕES DE ULTILIZAÇÃO (pt)

1 ENCOMENDA DE PEÇAS
Referir sempre o número de peça, o nome e a quantidade das peças pretendidas, bem como o tipo e número de série da máquina.
2 EXPLICAÇÃO DAS COLUNAS
Ref. - Número de referência
Identifica uma peça numa lista e desenho. As peças sem número de referencia não são indicadas no desenho.
Part. No. - Número de peça
Se não for indicado o número de peça, não é possível obter a peça em causa como sobressalente. Uma peça cujo número é seguido de um ponto preto está incluída no conjunto impresso a cheio imediatamente por cima.
Nota: Um conjunto aparece impresso a cheio em todas as colunas.
"<<< >>>" remete para a consulta de outra lista.
Quando o(s) número(s) de uma peça(s) especifica(s) é(são) colocado(s) por baixo da linha de referência/nome, é necessário efectuar uma opção com base no tipo/versão da máquina.
Qty. - Quantidade
Indica a quantidade de peças relacionadas com o número de referência. "AR" significa "consoante requerido" : material avulso ou quantidade a determinar.
Name - Nome
É possível encontrar a tradução dos nomes das peças em inglês no catálogo nº 2930 1214 00.
Remarks - Observações
As peças incluídas nos Kits de Manutenção são indicados por K1, K2...
As peças de um Kit de Manutenção podem estar distribuídas por várias listas.
Uma letra pode indicar que uma peça foi certificada pela entidade autorizada referida, de acordo com os códigos ou normas mencionados; se a letra estiver entre parênteses, a peça em questão não se encontra certificada mas deve ser usada em unidades certificadas pela entidade autorizada. As dimensões são indicadas em milímetros.
3 ENTIDADES AUTORIZADAS: Ver texto acima.

ISTRUZIONI PER L'USO (it)

1 ORDINE DI PARTI DI RICAMBIO
Indicare sempre il numero di catalogo, la denominazione e la quantità delle parti richieste, come pure il tipo e il numero di matricola della macchina.
2 SPIEGAZIONE DELLE COLONNE
Ref.: Numero di riferimento
Indica un particolare nell'elenco delle parti e nel disegno. Le parti senza numero di riferimento non sono mostrate nel disegno.
Part No.: Numero di catalogo
Se non viene indicato il numero di catalogo, il particolare non può essere ottenuto come ricambio. Un particolare il cui numero è seguito da un asterisco nero è compreso nel gruppo stampato in grassetto immediatamente sopra.
Nota: Un gruppo è stampato in grassetto in tutte le colonne.
"<<< >>>" indica di consultare un altro elenco di parti di ricambio.
Quando il numero (i) di catalogo di una parte (i) specifica è messo sotto la linea del riferimento/denominazione si deve fare una scelta in base al tipo/versione della macchina.
Qty: Quantità
Indica la quantità di parti relative al numero di riferimento. "AR" significa "come richiesto": deve essere fissato materiale alla rinfusa o quantità.
Name: Nome
Le traduzioni dei nomi inglesi delle parti possono essere trovate nella pubblicazione No. 2930 1214 00.
Remarks - Osservazioni
Le parti comprese nei Service Kit sono indicate K1, K2, ecc.
Le parti di un Service Kit possono essere sparse in diverse liste.
Una lettera può indicare un particolare che è stato certificato, secondo le norme o i codici elencati, dall'ente autorizzato di seguito indicato; se una lettera è posta tra parentesi, il particolare stesso non è certificato, ma deve essere utilizzato sulle unità certificate dall'ente autorizzato.

KÄYTTÖOHJEET (fi)

1 OSIEN TILAAMINEN
Mainitse aina osan numero, nimi ja tarvittavien osien määrä sekä koneen tyyppi ja sarjanumero.
2 SARAKKEIDEN SELITYKSET
Ref. - Viitenumero
Viittaa osaan luettelossa ja piirustuksessa. Osat, joilla ei ole viitenumeroa, eivät näy piirustuksessa.
Part No. - Osanumero
Jos osanumeroa ei ole ilmoitettu, osaa ei saa varaosana. Osa, jonka jäljessä on musta piste, sisältyy lihavoituun osakokonaisuuteen.
Huomaa: Osakokonaisuus on lihavoitu kaikissa sarakkeissa.
"<<<>>>" ohjaa käyttämään toista luetteloa.
Kun tietyn osan tai tiettyjen osien osanumero(t) on merkitty viite/nimirivin alle, on suoritettava valinta koneen tyypin/version perusteella.
Qty - Määrä
Osoittaa viitenumeroon liittyvien osien määrän. "TM" tarkoittaa "tarpeen mukaan": irtotavaraa tai määrä on selvitettävä.
Name: Englanninkielisten osanimien käännökset löytyvät painotuotteesta nro 2930 1214 00.
Remarks
Huoltosarjoihin kuuluvat osat on varustettu merkinnöillä K1, K2...
Huoltosarjaan kuuluvat osat voivat olla moesta luettelosta.
Kirjain voi osoittaa, että mainittu valtuutettu elin on hyväksynyt osan luettelon koodien mukaisesti; jos kirjain on sulussa, itse osa ei ole sertifioitu mutta sitä on käytettävä valtuutetun elimen sertifioimien yksiköiden yhteydessä.
Mitat on annettu millimetreinä.
3 VALTUUTETUT ELIMET: Katso englanninkielinen teksti edellä.

HHF 7791
p151
REVO

No. 2930 1268 01/DC 99.01

Atlas Copco

HAF 7701
p152
RENO

INTENTIONALLY
BLANK