START

0012420

Hanford Waste Vitrification Plant
Westinghouse Hanford Company
P. O. Box 1970
Richland, Washington 99352

FLUOR DANIEL, INC.

Date: JANUARY 15,1991

Reference: Hanford Waste Vitrification Plant
DOE Contract DE-AC06-86RL10838
Fluor Contract 8457

Attention: Mr. Mike Gordon
State of Washington
Department of Ecology (PV-11)
Olympia, WA 98504-8711

Transmittal No.: WDOE-035

Gentlemen:

TRANSMITTAL

We enclose 2 copies of the items listed below. These are issued per US-DOE request.

Response due to Fluor: N/A
Responds to: N/A

Number	Rev.	Date	Title
CONTROL COPIES #25,26			HVAC FLOW & CONTROL DIAGRAM SYSTEM 05
H-2-129800 SHT 1 OF 1	02	12/28/90	VITRIFICATION BUILDING ZONE I COMPOSITE
H-2-129815 SHT 1 OF 2	02	12/28/90	VITRIFICATION BUILDING ZONE II AREAS
H-2-129881 SHT 1 OF 3	02	12/28/90	CANISTER STORAGE BUILDING OPERATING AREA
H-2-129823 SHT 5 OF 6	02	12/28/90	VITRIFICATION BUILDING ZONE II ANALYTICAL LABORATORY HOODS
H-2-129823 SHT 6 OF 6	02	12/28/90	VITRIFICATION BUILDING ZONE II ANALYTICAL LABORATORY HOODS
H-2-129891 SHT 1 OF 2	02	12/28/90	FAN HOUSE FAN ROOM
H-2-129891 SHT 2 OF 2	02	12/28/90	FAN HOUSE FAN ROOM
H-2-129892 SHT 1 OF 3	02	12/28/90	FAN HOUSE ELEC.HVAC EQUIP.ROOM,F.O.S. STORAGE, SAMPLE STORAGE & BATTERY ROOM
H-2-129892 SHT 3 OF 3	02	12/28/90	FAN HOUSE ELEC.HVAC EQUIP.ROOM,F.O.S. STORAGE, SAMPLE STORAGE & BATTERY ROOM
H-2-129901 SHT 2 OF 2	02	12/28/90	SWITCHGEAR/GENERATOR BLDG. NORMAL AND STANDBY SWITCHGEAR ROOM SUPPLY

JAN 1991
RECEIVED
EDMC

Distribution:
Reference: FRP-194, FUP-018
VPO/AME Corresp Cntrl Cntr, MSIN A5-10 w/0
P. Felise, WHC-RL (MSIN G6-16) w/1 cc#30
Environmental Data Management Center
(MSIN H4-51)w/1 cc#31
D. Duncan, US EPA, Region X w/0

Very truly yours,

R. N. Gibbons
Project Director

RNG:JLS:dc

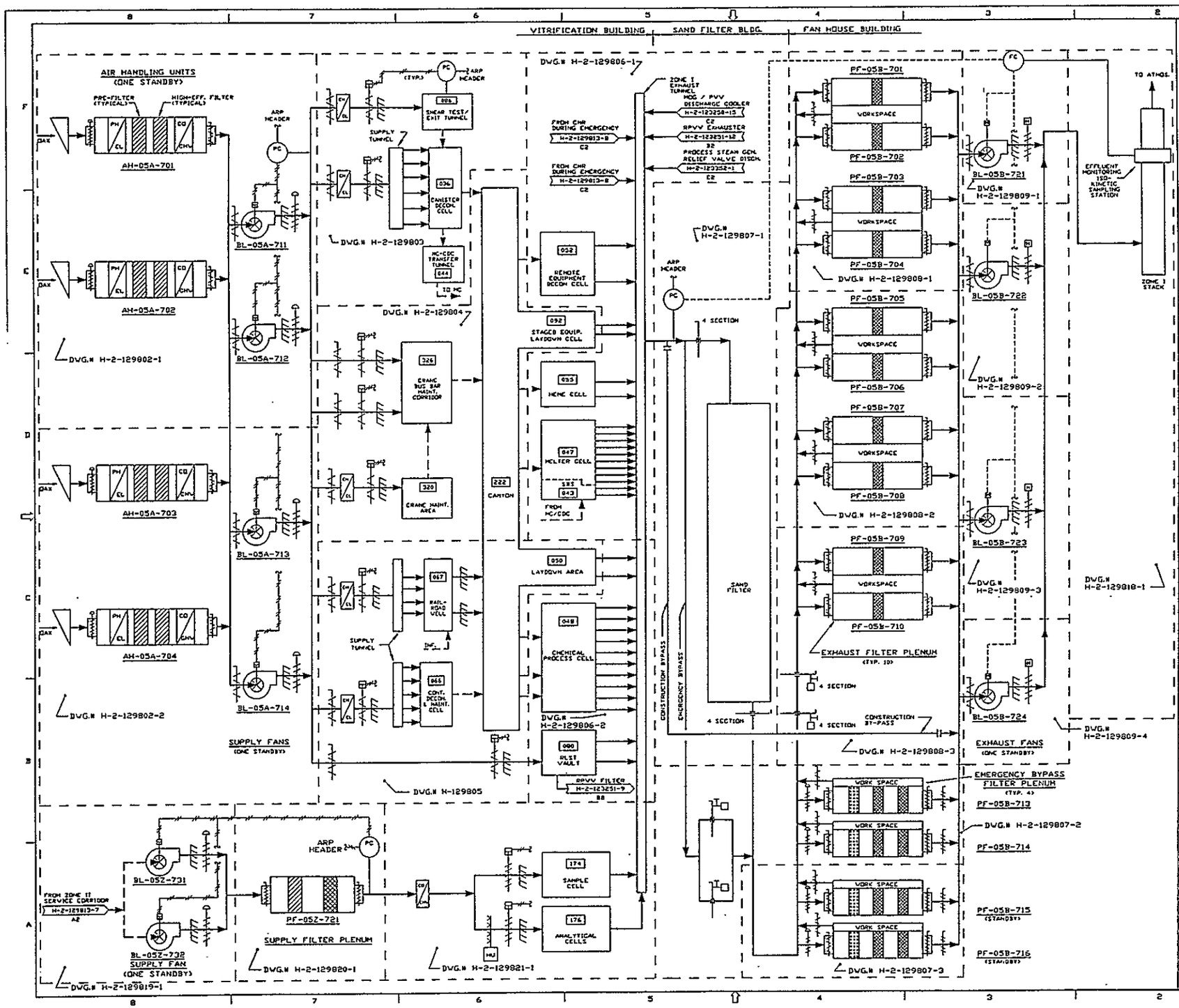

GENERAL NOTES:

A. REFER TO DRAWING H-2-123001 "LEGEND OF SYMBOLOGY FOR PROCESS FLOW AND PIPING AND INSTRUMENT DIAGRAMS" FOR AN EXPLANATION OF SYMBOLS AND ABBREVIATIONS.

B. FIRE DAMPER LOCATIONS AND REQUIREMENTS WILL BE VERIFIED IN DETAILED DESIGN.

REV.		REVISION DESCRIPTION					
02	11/21/90	ADDED PROCESS STEAM GENERATOR RELIEF VALVE					
		DISCHARGE CONNECTION TO EXHAUST TUNNEL CONDITIONS					
01	9/26/90	ISSUED FOR FLUOR DANIEL	SA	TC	RT	MM	
		CONTROL PER CR HVVP-0446-2	JS	FB	DC	RG	
00	9/24/90	RELEASED FOR DETAILED DESIGN	SA	TC	RT	MM	
			JS	FB	DC	RG	

ENGINEERING RELEASE
REV. ____ DATE ____

U.S. DEPARTMENT OF ENERGY
Richland Operations Office
DE - AC06-86RL10938

FLUOR DANIEL, INC.
ADVANCED TECHNOLOGY DIVISION

HVAC FLOW & CONTROL DIAGRAM
SYSTEM 05
VITRIFICATION BUILDING
ZONE I COMPOSITE

HANFORD WASTE VITRIFICATION PLANT

R.MAGISSONS	9/26/90	
O.P.CHAVLA	9/26/90	
F.G.WOODS	9/26/90	
J.L.SMITS	9/26/90	
M.G.MERCADO	9/26/90	
R.T.TUCKER	9/26/90	
R.G.TAGNEY	9/26/90	
T.Y.CHEN	9/26/90	
S.AHVAR	9/26/90	
M.VERGOL-DE-DIOS	9/26/90	

PROJECT	DWG. CONTROL NO.	SHEET	REV.
B-393	8457	3828	

SCALE: NONE

SIZE	DWG. NO.	SHEET	REV.
NONE	H-2-129800	1	02

NOT REQ'D

AA490012 / 01
12-14-90 - 08:33
HC

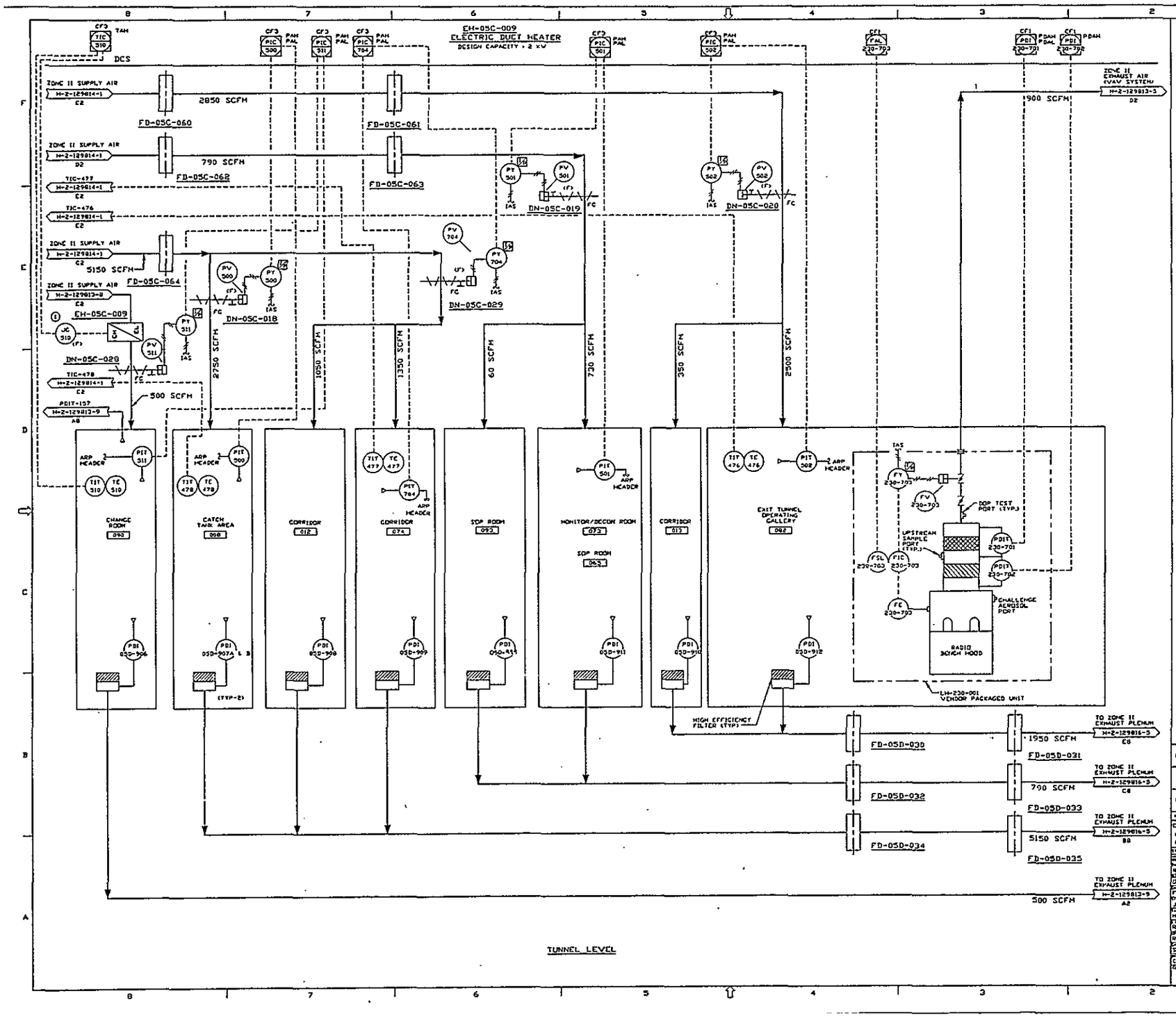

GENERAL NOTES:

A. THREE DIGIT INSTRUMENT TAG NUMBERS ARE PREFIXED WITH 05C UNLESS A SIX DIGIT NUMBER IS SHOWN TO INDICATE ANOTHER SYSTEM.

B. FIRE DAMPER LOCATIONS AND REQUIREMENTS WILL BE VERIFIED IN DETAILED DESIGN.

NOTES:

1. THE MULTI-STEP ELECTRIC HEATER POWER CONTROLLER SYSTEM INCLUDES A MULTI-STAGE STEP CONTROLLER AND A MODULATING SILICON CONTROLLED RECTIFIER (SCR) TO PROVIDE MODULATING CONTROL BETWEEN EACH SUCCESSIVE STAGE. LOW AIR FLOW AND HIGH HEATER TEMPERATURE CUTOUTS ARE ALSO INCLUDED.

SAFETY CLASS 3

REV	DATE	DESCRIPTION	APPROVAL INITIALS
02	11/18/98	UPDATED FD-057-099 & FD-050-040	SA JS RT MN
		OCN-0001	
01	11/18/98	ISSUED FOR FLUOR DANIEL	SA RF RT MN
		CONTROL PER CR HWVP-0446-2	JS FB DC RG
00	9/24/98	RELEASED FOR DETAILED DESIGN	SA RF RT MN
			JS FB DC RG

ENGINEERING RELEASE
REV. ____ DATE ____
CRQ ____

U.S. DEPARTMENT OF ENERGY
Richland Operations Office
DE - AC06-96RL10938

FLUOR DANIEL INC.
ADVANCED TECHNOLOGY DIVISION

HVAC FLOW & CONTROL DIAGRAM
SYSTEM 05
VITRIFICATION BUILDING
ZONE II AREAS

HANFORD WASTE VITRIFICATION PLANT

R.HAGEBOMS	9/25/98	
D.P.CHAVLA	9/25/98	
F.G.BROOKS	9/25/98	
J.L.SMITS	9/25/98	
H.GHERCADO	9/25/98	
R.G.TAGNEY	9/25/98	
R.E.FLIE	9/25/98	
S.ANVAR	9/25/98	
C.F.DSHOND	9/25/98	

SCALE: NONE
DRAWING NUMBER: H-2-129815 | SHEET 1 | REV 2 | REV 02
NOTE: NOT REQ'D

AA481532 / 94
12-14-90 - 1509
MC

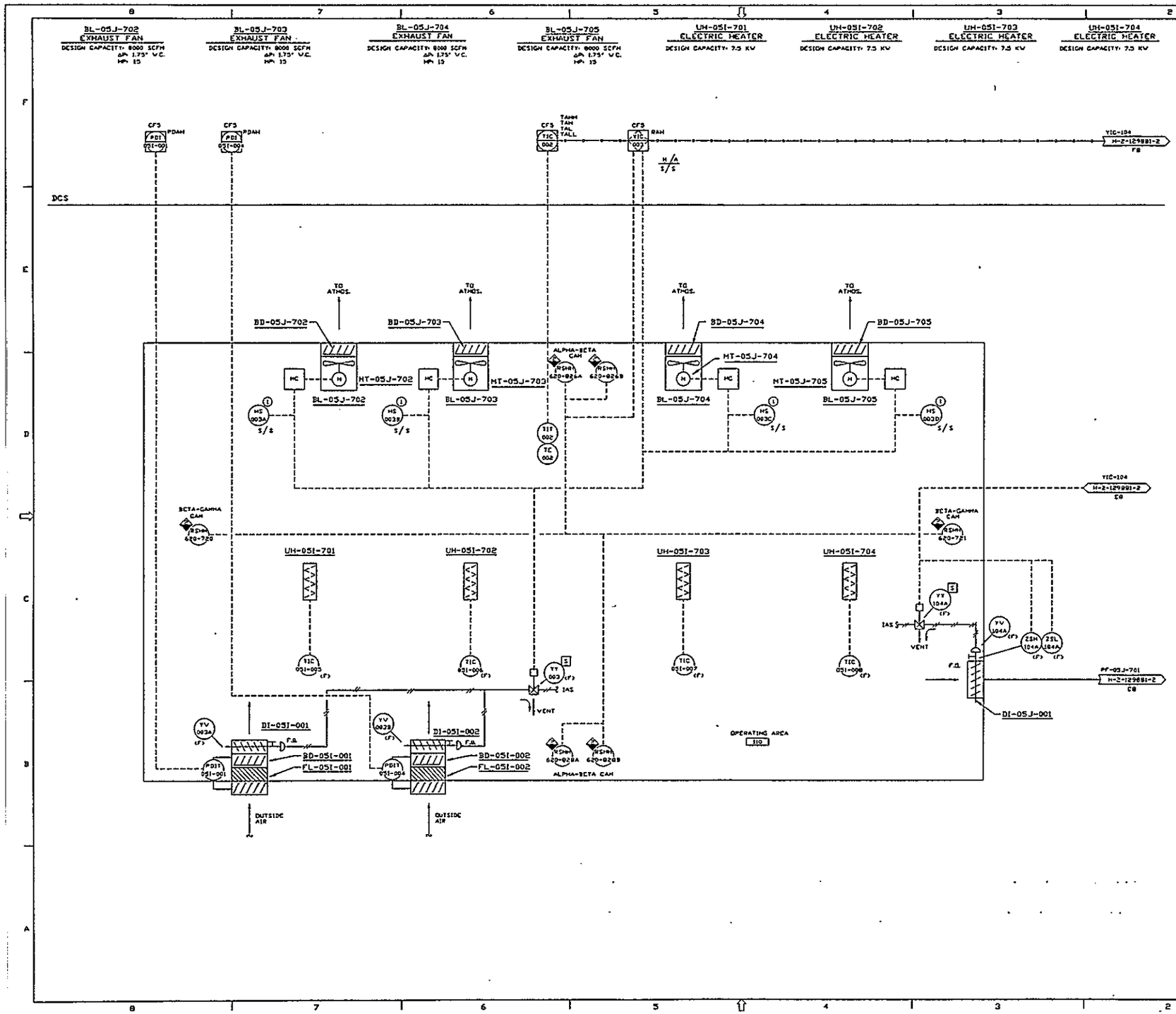

GENERAL NOTES:

A. THREE DIGIT INSTRUMENT TAG NUMBERS ARE PREFIXED WITH 05J UNLESS A SIX DIGIT NUMBER IS SHOWN TO INDICATE ANOTHER SYSTEM.

B. FOR DEFINITION OF LOGIC CONTAINED IN DIAMOND SYMBOLS, ◇, AND HEX SYMBOLS, ⬡, SEE PROCESS CONTROL DESCRIPTION (PCD) SPECIFICATION 8-595-E-17500-DS-05J.

C. REFER TO DRAWING H-2-123001 "LEGEND OF SYMBOLOGY FOR PROCESS FLOW AND PIPING AND INSTRUMENT DIAGRAMS" FOR AN EXPLANATION OF SYMBOLS AND ABBREVIATIONS.

D. FIRE DAMPER LOCATIONS AND REQUIREMENTS WILL BE VERIFIED IN DETAILED DESIGN.

NOTES:

1. THE LOCAL HANDSWITCH STATION WILL CONTAIN START AND STOP PUSHBUTTONS AND A SPRING RETURN KEYLOCK SWITCH, ALL WIRED DIRECTLY TO THE MC. THE START PUSHBUTTON WILL BE ENABLED ONLY WHEN THE KEY IS INSERTED AND TURNED. THE STOP PUSHBUTTON WILL STOP THE MOTOR AT ANY TIME.

SAFETY CLASS 2 AS NOTED

REV	DATE	REVISION DESCRIPTION	DRAWING DETAILS				
02	11/18/98	REVISED SAFETY CLASS DCN-0001	YL	SA	RT	MM	
01	11/25/98	ISSUED FOR FLUOR DANIEL	ZM	SA	RT	MM	
		CONTROL PER CR HVVP-8446-2	JS	FB	DC	RG	
00	9/24/98	RELEASED FOR DETAILED DESIGN	ZM	SA	RT	MM	
			JS	FB	DC	RG	

ENGINEERING RELEASE
REV. ____ DATE ____
ECN ____

U.S. DEPARTMENT OF ENERGY
Richland Operations Office
DE - AC06-86RL10838

FLUOR DANIEL, INC.
ADVANCED TECHNOLOGY DIVISION

HVAC FLOW & CONTROL DIAGRAM
SYSTEM 05
CANISTER STORAGE BUILDING
OPERATING AREA

HANFORD WASTE VITRIFICATION PLANT

R.M.GIBBONS	9/21/98	
O.P.CHAVLA	9/21/98	
F.G.BROOKS	9/28/98	
J.L.SMITS	9/28/98	
M.GHERCADO	9/28/98	
R.G.TAGNEY	9/27/98	
S.ATTAI	9/27/98	
Z.MILADOVIC	9/27/98	
J.S.DRUMEKA	9/22/98	

PROJECT NO. 8-595 | FLUOR DANIEL JOB NO. 8457 | DWG NO. 3229
SCALE: NONE | REV. NO. | SHT NO.
ORIGINAL SIZE: NONE | NOT REQ'D | DRAWING NUMBER: H-2-129881 | SHEET 1 | OF 3 | REV. 02

AA408112 / 10
12-11-98 - 1629
SV

9 1 1 2 1 1 7 1 1 1 2 4

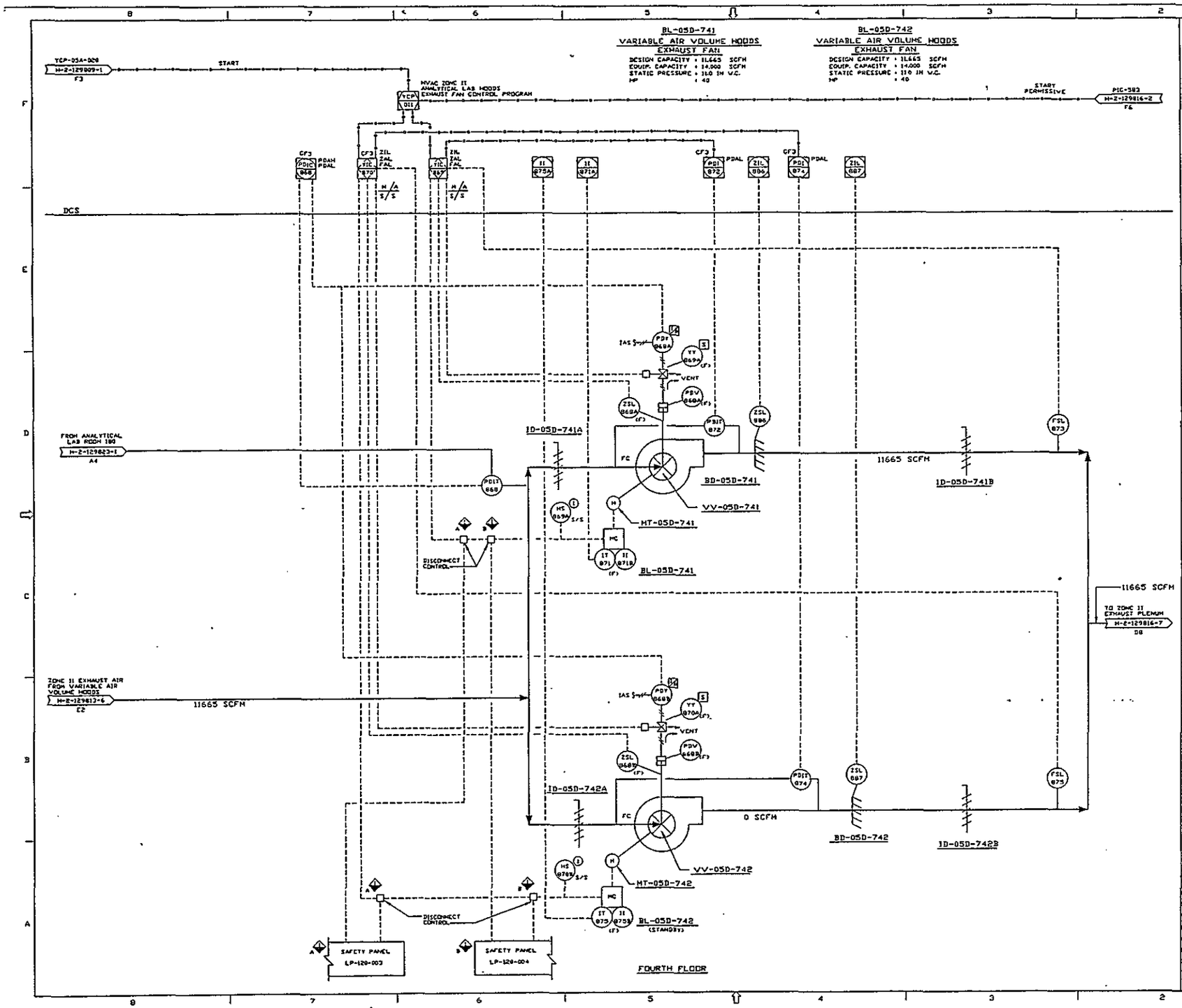

GENERAL NOTES:

A. FOR GENERAL NOTES, REFER TO H-2-129823 SHT. NO. 1.

B. THREE DIGIT INSTRUMENT TAG NUMBERS ARE PREFIXED WITH 05D UNLESS A SIX DIGIT NUMBER IS SHOWN TO INDICATE ANOTHER SYSTEM.

NOTES:

1. THE LOCAL HANDSWITCH STATION WILL CONTAIN START AND STOP PUSHBUTTONS AND A SPRING RETURN KEYLOCK SWITCH. ALL WIRED DIRECTLY TO THE MC. THE START PUSHBUTTON WILL BE ENABLED ONLY WHEN THE KEY IS INSERTED AND TURNED. THE STOP PUSHBUTTON WILL STOP THE MOTOR AT ANY TIME.

SAFETY CLASS 1 AS NOTED

REV.	DATE	DESCRIPTION	DRAWN	CHK	APPD	APPD
02	11/6/98	ORDER FO-050-071 O/A-0001	JS	RF	RT	MM
01	11/6/98	ISSUED FOR FLUOR DANIEL	SA	RF	RT	MM
		CONTROL PER CR HVVP-0446-2	JS	FB	DC	RG
00	7/24/98	RELEASED FOR DETAILED DESIGN	SA	RF	RT	MM
			JS	FB	DC	RG

ENGINEERING RELEASE
REV. ____ DATE ____
CRD ____

U.S. DEPARTMENT OF ENERGY
Richland Operations Office
DE - AC06-96RL13836

FLUOR DANIEL, INC.
ADVANCED TECHNOLOGY DIVISION

HVAC FLOW & CONTROL DIAGRAM
SYSTEM 05
VITRIFICATION BUILDING ZONE II
ANALYTICAL LABORATORY HOODS

HANFORD WASTE VITRIFICATION PLANT

R.N. GIBBONS	9/25/98	
O.P. CHAVLA	9/25/98	
J.G. BROOKS	9/25/98	
J.L. SMITS	9/19/98	
H. CHERCADO	9/19/98	
R.G. TAGNEY	9/19/98	
R.E. FLYC	9/19/98	
S. ANVAR	9/19/98	
RLVERGEL-DC-DHOS	9/18/98	

DRAWN BY: B-595 | CONTRACT NO. 8457 | DWG NO. 3228
SCALE: NONE | ENG. NO.
DATE/TIME:
DRAWING NAME: NONE

NONE	NOT REQ'D	H-2-129823	5	6	02

AA482352 / 04
12-14-98 - 4921
HC

9 1 1 2 1 1 7 1 1 1 5

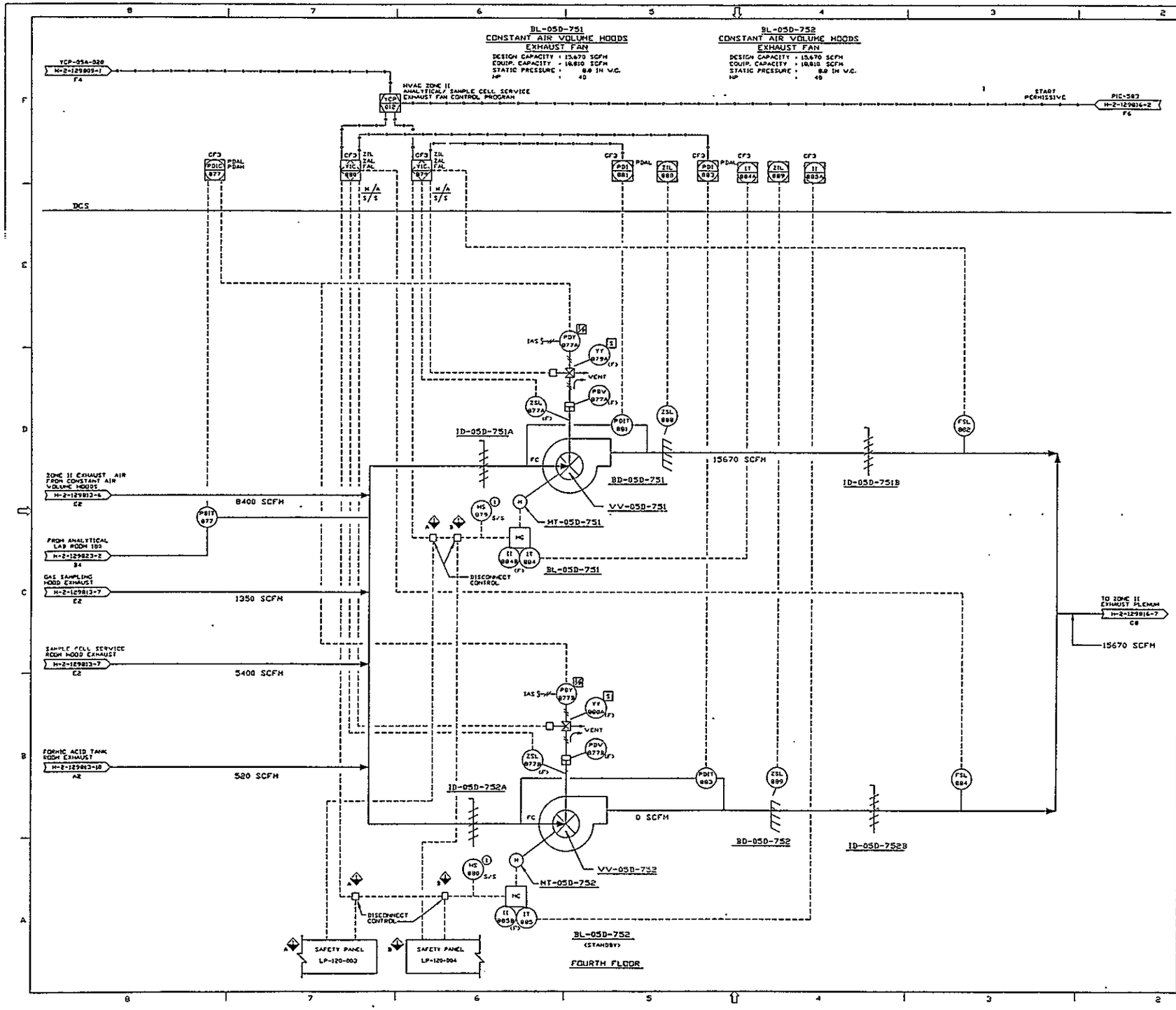

GENERAL NOTES:

A. FOR GENERAL NOTES, REFER TO H-2-129823 SHT. NO. 1.

B. THREE DIGIT INSTRUMENT TAG NUMBERS ARE PREFIXED WITH 05D UNLESS A SIX DIGIT NUMBER IS SHOWN TO INDICATE ANOTHER SYSTEM.

NOTES:

1. THE LOCAL HANDSWITCH STATION WILL CONTAIN START AND STOP PUSHBUTTONS AND A SPRING RETURN KEYLOCK SWITCH. ALL WIRED DIRECTLY TO THE MC. THE START PUSHBUTTON WILL BE ENABLED ONLY WHEN THE KEY IS INSERTED AND TURNED. THE STOP PUSHBUTTON WILL STOP THE MOTOR AT ANY TIME.

SAFETY CLASS 1 AS NOTED

REV	DATE	REVISION DESCRIPTION	DRAWN	CHK	APPROVAL	APPROVAL DATE
02	11/18/98	OBSOLETED F0-050-078, F0-050-079 & F0-050-074				
		05H-0031				
01	11/18/98	ISSUED FOR FLUOR DANIEL	SA	RF	RT	MM
		CONTROL PER CR HVVP-0446-2	JS	FB	GC	RG
00	9/24/98	RELEASED FOR DETAILED DESIGN	SA	RF	RT	MM
			JS	FB	GC	RG

ENGINEERING RELEASE
REV. ____ DATE ____
COD ____

U.S. DEPARTMENT OF ENERGY
Richland Operations Office
DE - AC06-86RL10938

FLUOR DANIEL, INC.
ADVANCED TECHNOLOGY DIVISION

HVAC FLOW & CONTROL DIAGRAM
SYSTEM 05
VITRIFICATION BUILDING ZONE II
ANALYTICAL LABORATORY HOODS

HANFORD WASTE VITRIFICATION PLANT

3-595	8457	2228	
NONE	NOT REQ'D	H-2-129823	6 6 02

AA482362 / 06
12-14-98 - 8942
MC

9611121116

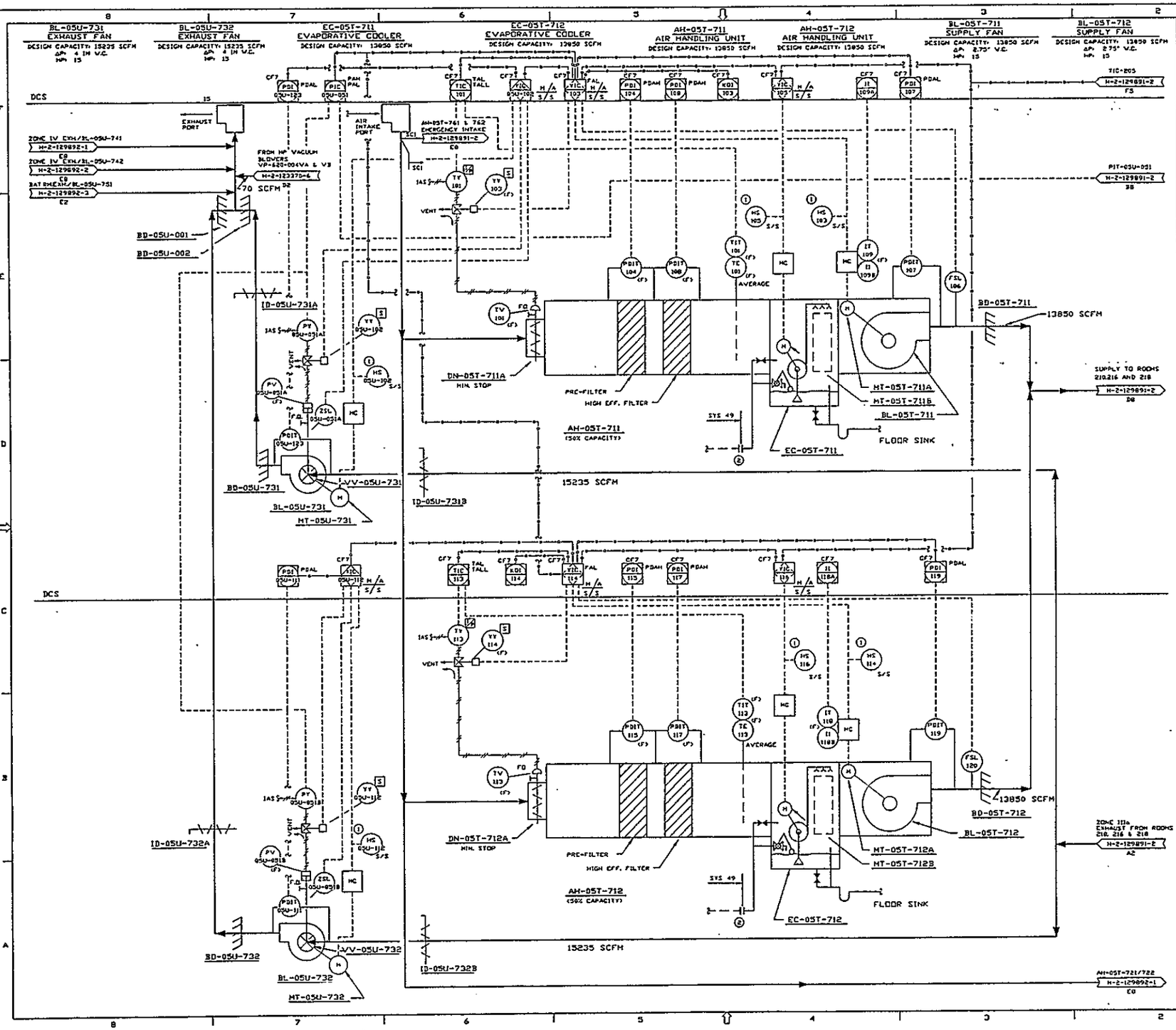

GENERAL NOTES:

A. THREE DIGIT INSTRUMENT TAG NUMBERS ARE PREFIXED WITH 05T UNLESS A SIX DIGIT NUMBER IS SHOWN TO INDICATE ANOTHER SYSTEM.

B. FOR DEFINITION OF LOGIC CONTAINED IN DIAMOND SYMBOLS, ⊠, AND HEX SYMBOLS, ⬡, SEE PROCESS CONTROL DESCRIPTION (PCD) SPECIFICATION B-595-C-17500-05-05J.

C. REFER TO DRAWING H-2-123001 "LEGEND OF SYMBOLOGY FOR PROCESS FLOW AND PIPING AND INSTRUMENT DIAGRAMS" FOR AN EXPLANATION OF SYMBOLS AND ABBREVIATIONS.

D. FIRE DAMPER LOCATIONS AND REQUIREMENTS WILL BE VERIFIED IN DETAILED DESIGN.

NOTES:

① THE LOCAL HANDSWITCH STATION WILL CONTAIN START AND STOP PUSHBUTTONS AND A SPRING RETURN KEYLOCK SWITCH, ALL WIRED DIRECTLY TO THE MC. THE START PUSHBUTTON WILL BE ENABLED ONLY WHEN THE KEY IS INSERTED AND TURNED. THE STOP PUSHBUTTON WILL STOP THE MOTOR AT ANY TIME.

② FOR SERVICE WATER CONNECTION DETAIL, SEE DRAWING H-2-123350-1.

SAFETY CLASS 1 AS NOTED

REV.	DATE	REVISION DESCRIPTION	DR	CHK	APP	APPROVAL DETAILS
02	12/14/90	REVISED AHFRA EXHAUST TO ROOM 210,216,218 PER CN-0001	JS	FB	RG	
01	10/26/90	ISSUED FOR FLUOR DANIEL	ZH	SA	RT	MM
		CONTROL PER CR HVVP-0446-2	JS	FB	OC	RG
00	9/24/90	RELEASED FOR DETAILED DESIGN	ZH	SA	RT	MM
			JS	FB	OC	RG

ENGINEERING RELEASE
REV. ____ DATE ____
CRD ____

U.S. DEPARTMENT OF ENERGY
Richland Operations Office
DE - AC06-88RL10838

FLUOR DANIEL, INC.
ADVANCED TECHNOLOGY DIVISION

HVAC FLOW & CONTROL DIAGRAM
SYSTEM 05
FAN HOUSE
FAN ROOM

HANFORD WASTE VITRIFICATION PLANT

R.H. GIBBONS	9/21/90	
D.P. CHAVLA	9/21/90	
F.G. BROOKS	9/21/90	
J.L. SHETS	9/18/90	
M. CHERCADO	9/18/90	
R.G. TAGNEY	9/17/90	
S. SATTAI	9/17/90	
Z. MILATOVIC	9/17/90	
J. SKROUPSKA	9/17/90	

PROJECT: B-595 | CONTRACT: 8437 | DWG: 3229
SCALE: NONE
NOT REQ'D
H-2-129891 | SHEET 1 | OF 2 | REV. 02

AA429112 / 11
12-14-90 - 1632
MC

9112117

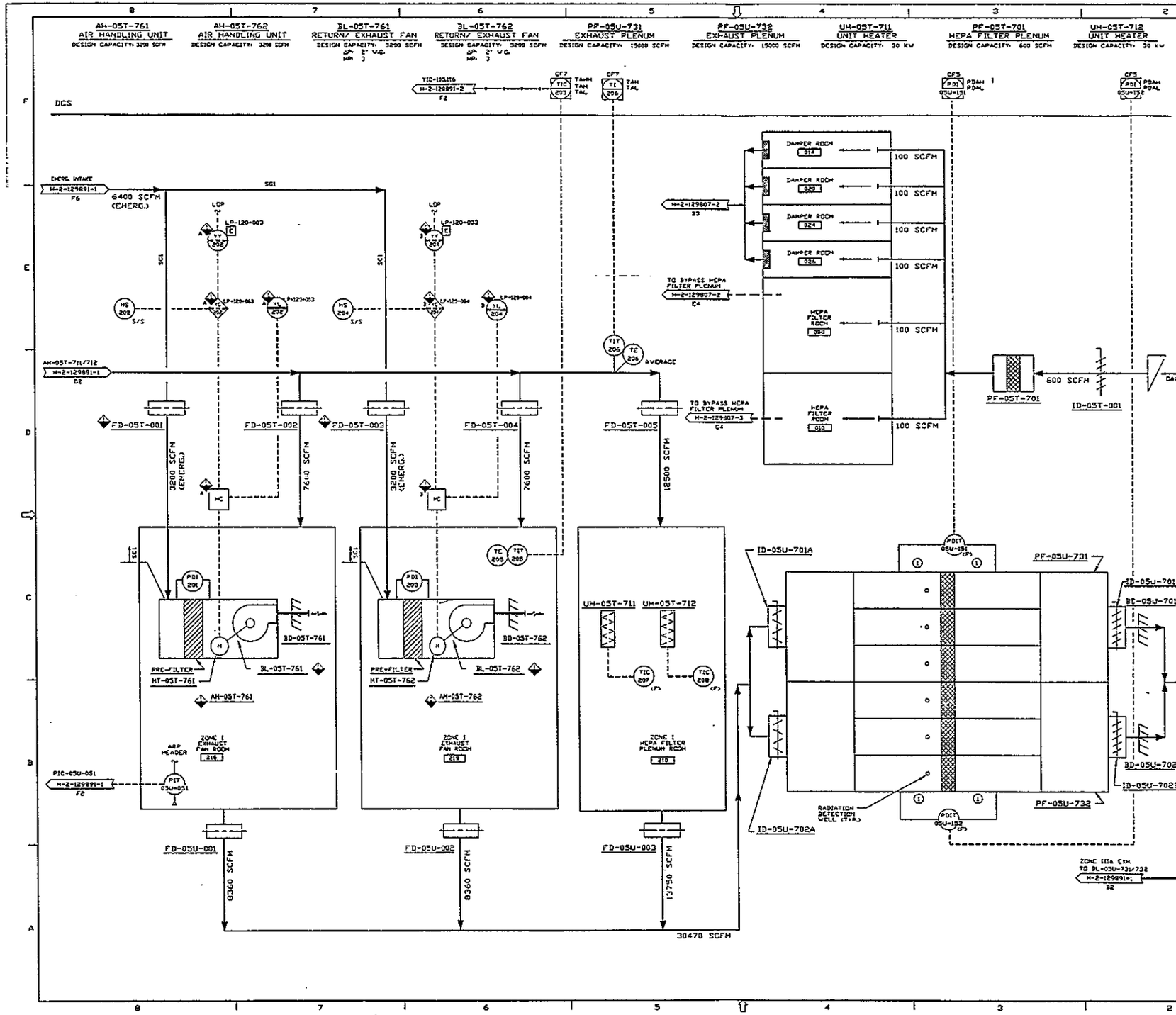

GENERAL NOTES:

A. FOR GENERAL NOTES REFER TO H-2-129891-1, SHEET NO. 1

NOTES:

1. FACTORY BUILT-IN PLACE CHALLENGE AEROSOL INLET PORTS, DIFFUSERS, SAMPLE TEST PORTS, AND TEST SECTIONS UPSTREAM AND DOWNSTREAM SHALL BE PROVIDED FOR EACH HEPA FILTER.

SAFETY CLASS 1 AS NOTED

REV	DATE	REVISED VENTILATION, ZONING & CFM CAPACITIES				
02	12/14/98	CCN-0001				
01	12/14/98	ISSUED FOR FLUOR DANIEL	ZM	SA	RT	MM
		CONTROL PER CR NWVP-0446-2	JS	FB	GC	RG
00	9/24/98	RELEASED FOR DETAILED DESIGN	ZM	SA	RT	MM
			JS	FB	GC	RG

ENGINEERING RELEASE
REV ____ DATE ____
CRD ____

U.S. DEPARTMENT OF ENERGY
Richland Operations Office
DE - AC06-96RL10839

FLUOR DANIEL, INC.
ADVANCED TECHNOLOGY DIVISION

HVAC FLOW & CONTROL DIAGRAM
SYSTEM 05
FAN HOUSE
FAN ROOM

HANFORD WASTE VITRIFICATION PLANT

R.NICISBONS	9/23/98	
G.P.CHAVLA	9/23/98	
F.G.BROOKS	9/21/98	
J.L.SHETS	9/18/98	
H.GUERCADO	9/18/98	
R.G.TAGNEY	9/17/98	
S.ATTAI	9/17/98	
Z.MILATOVIC	9/17/98	
J.SKORUPSKA	9/17/98	

PROJECT: 8-533 | JOB ORDER NO.: 8457 | DWG NO.: 3229
SCALE: NONE | SHEET 2 OF 2 | REV. 02
NONE | NOT REQ'D | H-2-129891

AA489122 / 11
12-14-98 - 1708
SV

9 1 1 1 2 1 1 6

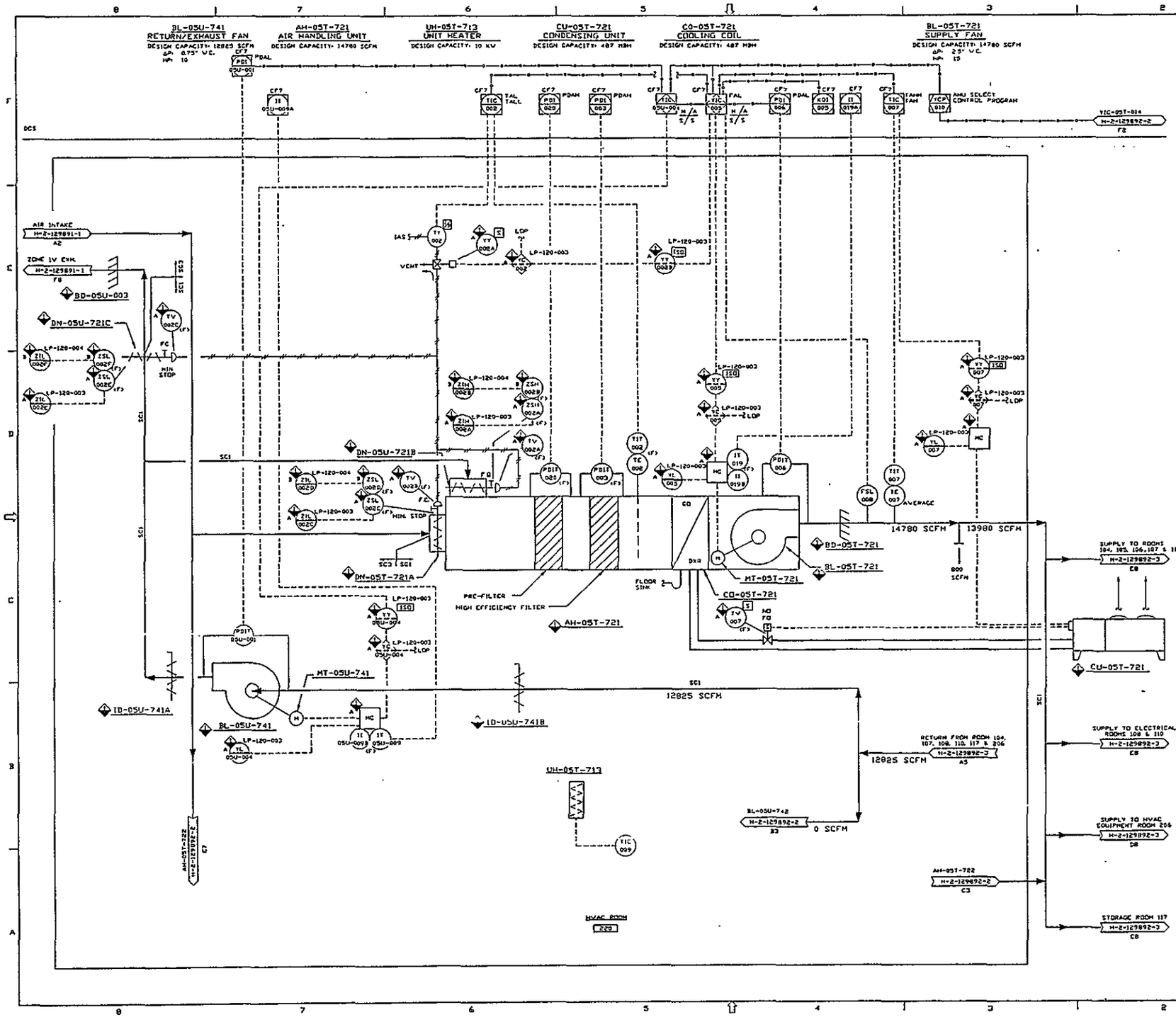

GENERAL NOTES:

A. THREE DIGIT INSTRUMENT TAG NUMBERS ARE PREFIXED WITH 05T UNLESS A SIX DIGIT NUMBER IS SHOWN TO INDICATE ANOTHER SYSTEM.

B. FOR DEFINITION OF LOGIC CONTAINED IN DIAMOND SYMBOLS, ⊠, AND HEX SYMBOLS, ⬡, SEE PROCESS CONTROL DESCRIPTION (PCD), SPECIFICATION B-595-C-17500-DS-051.

C. REFER TO DRAWING H-2-123001 "LEGEND OF SYMBOLOGY FOR PROCESS FLOW AND PIPING AND INSTRUMENT DIAGRAMS" FOR AN EXPLANATION OF SYMBOLS AND ABBREVIATIONS.

D. FIRE DAMPER LOCATIONS AND REQUIREMENTS WILL BE VERIFIED IN DETAILED DESIGN.

SAFETY CLASS 1 AS NOTED

REV.	DATE	REVISION DESCRIPTION	DRAWN	CHK	APPR	APPROVAL DATE
02	7/1/96	ADDED ROOM NO. 111 9CH-0001				
01	4/29/96	ISSUED FOR FLUOR DANIEL	ZH	SA	RT	MM
		CONTROL PER CR HVVP-0446-2	JS	FB	OC	RG
00	9/20/95	RELEASED FOR DETAILED DESIGN	ZH	SA	RT	MM
			JS	FB	OC	RG

ENGINEERING RELEASE
REV. ____ DATE ____
END ____

DRAWN	R H GIBBONS	9/20/96
DESIGN	D P CHAVLA	9/20/96
ENGINEERING	F G BROOKS	9/20/96
SYSTEMS	J L SMETS	9/18/96
PROJECT	M G MERCADO	9/18/96
PROJECT ENGR	R C TAGNEY	9/17/96
DESIGN	S JATTAI	9/17/96
CHECK	Z MILATOVIC	9/17/96
ENGINEER	J SKORUPSKA	9/13/96

U.S. DEPARTMENT OF ENERGY
Richland Operations Office
DE - AC06-86RL10838

FLUOR DANIEL, INC.
ADVANCED TECHNOLOGY DIVISION

HVAC FLOW & CONTROL DIAGRAM
SYSTEM 05
FAN HOUSE
ELEC. HVAC EQUIP. ROOM, F.O.S. STORAGE, SAMPLE STORAGE & BATTERY ROOM

PROJECT TITLE: HANFORD WASTE VITRIFICATION PLANT
PROJ. NO. B-595
PLANT CONTROL NO. B457
DWG. NO. 3229
SCALE: NONE
SHEET NO. 1 OF 3
REV. NO. 02
DRAWING NO. H-2-129892

AA409212 / 11
12-20-96 - 09:46
SV

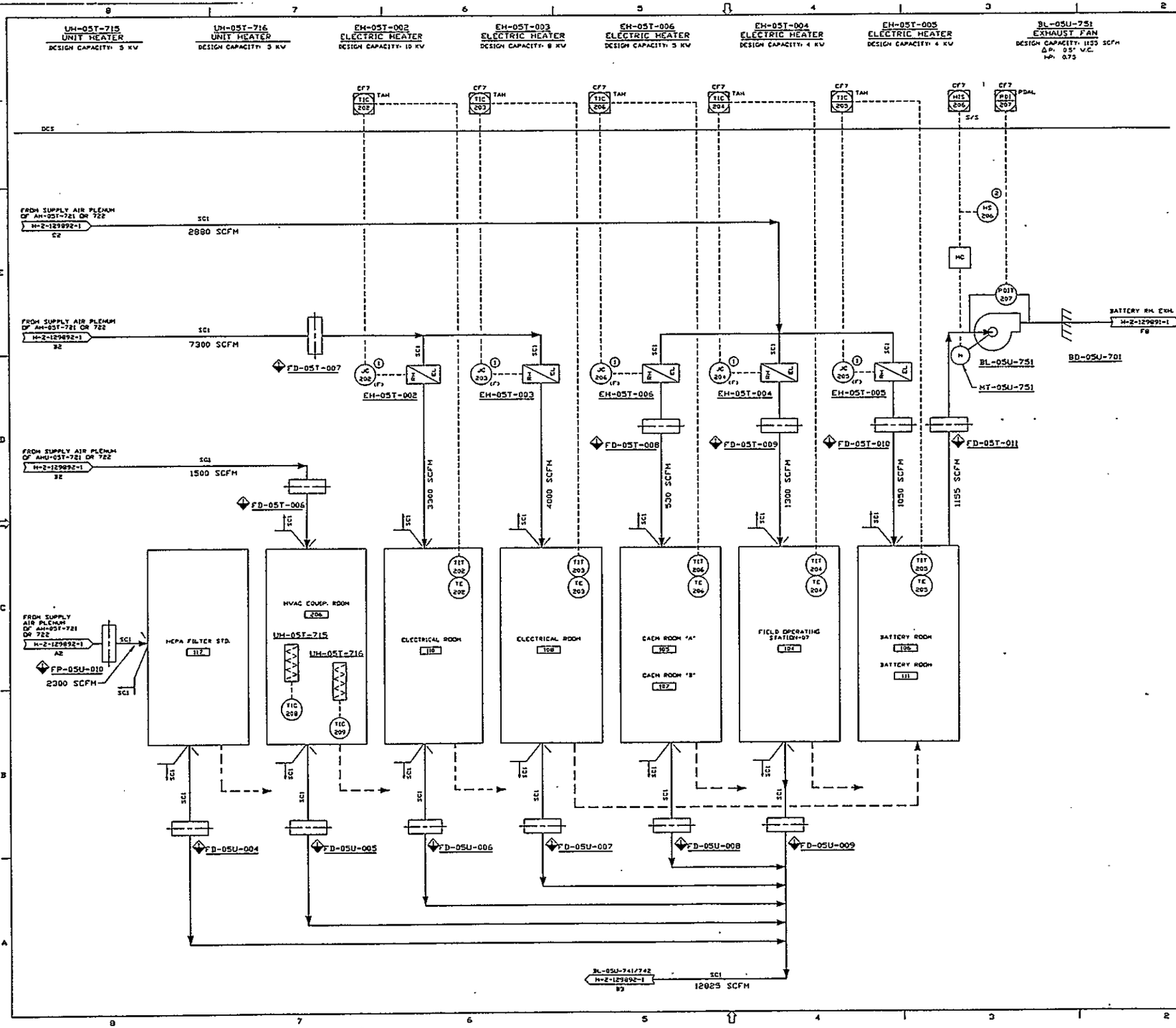

GENERAL NOTES:

A. FOR GENERAL NOTES, REFER TO H-2-129892 SHT. NO. 1.

NOTES:

1. THE MULTI-STEP ELECTRIC HEATER POWER CONTROLLER SYSTEM INCLUDES A MULTI-STAGE STEP CONTROLLER, LOW AIR FLOW AND HIGH HEATER TEMPERATURE CUTOUTS.
2. THE LOCAL HANDSWITCH STATION WILL CONTAIN START AND STOP PUSHBUTTONS AND A SPRING RETURN KEY LOCK SWITCH ALL WIRED DIRECTLY TO THE MC. THE START PUSHBUTTON WILL BE ENABLE ONLY WHEN THE KEY IS INSERTED AND TURNED. THE STOP PUSHBUTTON WILL STOP THE MOTOR AT ANY TIME.

SAFETY CLASS 1 AS NOTED

REV.	DATE	REVISION DESCRIPTION	APPROVAL INITIALS
02	11/18/96	ADDED BATTERY ROOM NO. 111 DCN-0001	SA TC RT PM
01	12/12/96	ISSUED FOR FLUOR DANIEL	SA TC RT PM
		CONTROL PER CR 11VVP-0446-2	JS FB DC PG
00	9/24/96	RELEASED FOR DETAILED DESIGN	ZM SA RT PM
			JS FB DC PG

ENGINEERING RELEASE
REV. ____ DATE ____
ERD ____

SIGNATURE	DATE
R.M.GIBBONS	9/25/96
G.P.CHAVLA	9/25/96
F.G.BROOKS	9/25/96
J.L.SMITS	9/26/96
M.GMERCADO	9/26/96
R.G.TAGNEY	9/27/96
S.ATTAI	9/27/96
Z.MILATOVIC	9/27/96
J.SKORUPSKA	9/27/96

NONE NOT REQ'D

U.S. DEPARTMENT OF ENERGY
Richland Operations Office
DE - AC06-88RL10838

FLUOR DANIEL, INC.
ADVANCED TECHNOLOGY DIVISION

HVAC FLOW & CONTROL DIAGRAM
SYSTEM 05
FAN HOUSE
ELEC./HVAC EQUIP. ROOM
F.O.S. STORAGE, SAMPLE STORAGE
& BATTERY ROOM

PROJECT TITLE: HANFORD WASTE VITRIFICATION PLANT

PROJ. CONTRACT NO. B-595 | DWG. NO. 8457 | SHT. NO. 3229

SCALE: NONE | DWG. NO.

H-2-129892 | 3 | 3 | 02

AA489232 / 31
12-20-96 - 0932
HC

0 0 1 1 2 1 1 1 1 1 0

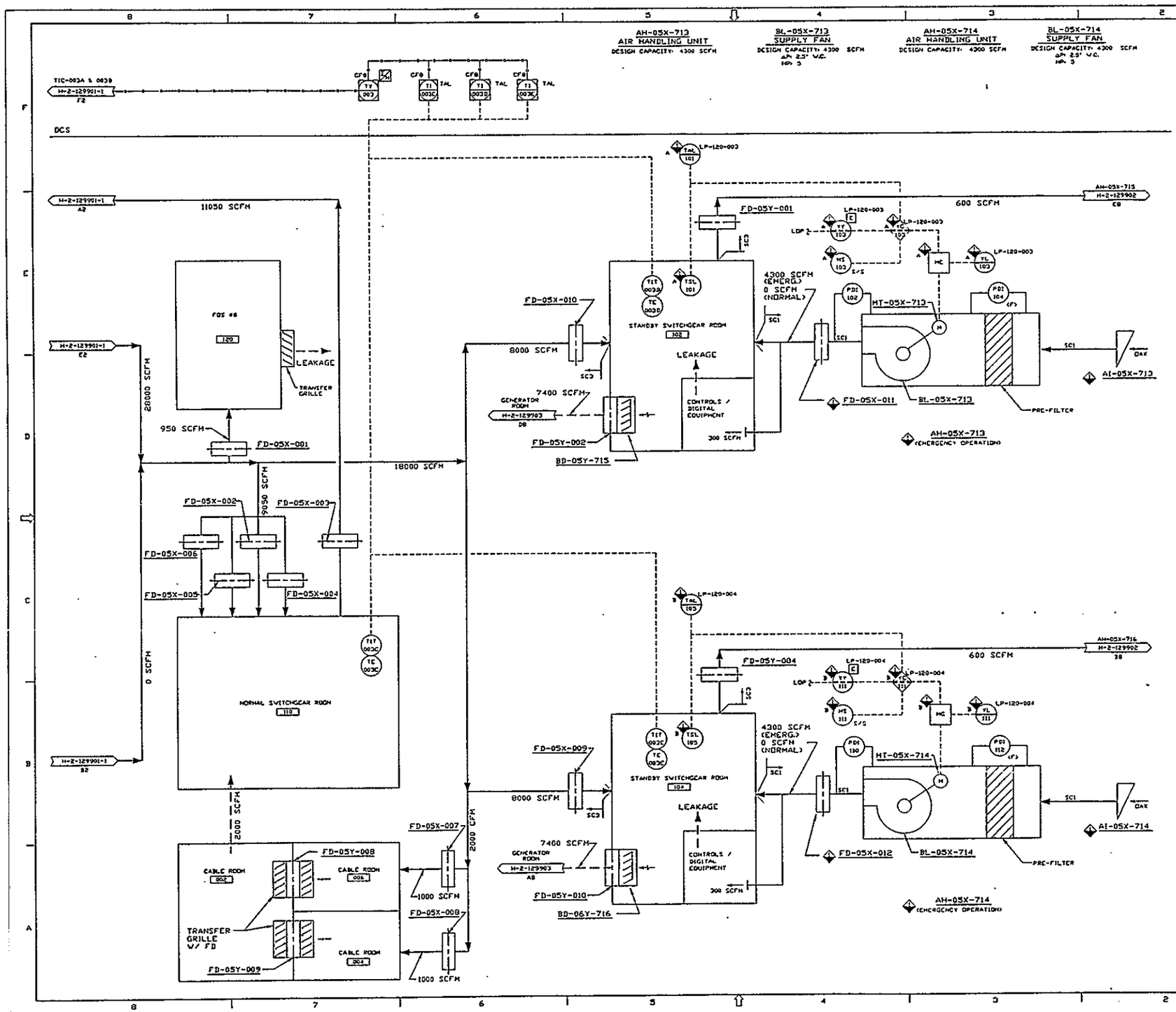

GENERAL NOTES:

A. FOR GENERAL NOTES, REFER TO H-2-129901 SHT. NO. 1.

SAFETY CLASS 1 AS NOTED

02	11/16/98	ADDED VENTILATION TO CONTROLS/DIGITAL				
		EQUIPMENT ROOMS OCN-0001				
01	11/12/97	ISSUED FOR FLUOR DANIEL	ZM	SA	RT	MM
		CONTROL PER CN HNUVP-0446-2	JS	FB	DC	RG
00	9/23/90	RELEASED FOR DETAILED DESIGN	ZM	SA	RT	MM
			JS	FB	DC	RG

REVISION DESCRIPTION

ENGINEERING RELEASE
REV. ___ DATE ___
CEQ

U.S. DEPARTMENT OF ENERGY
Richland Operations Office
DE - AC06-86RL10838

FLUOR DANIEL, INC.
ADVANCED TECHNOLOGY DIVISION

HVAC FLOW & CONTROL DIAGRAM
SYSTEM 05
SWITCHGEAR/GENERATOR BLDG.
NORMAL AND STANDBY
SWITCHGEAR ROOM SUPPLY

PROJECT TITLE: HANFORD WASTE VITRIFICATION PLANT

PROJECT: B-295 | JOB DESCRIPTION: 8457 | DWG NO.: 2229
SCALE: NONE | ENG NO.: | SHEET NO.:

NONE | NOT REQ'D | DRAWING NUMBER: H-2-129901 | 2 | 2 | 02

AA490121 / 12
12-29-99 - 0900
HC