ENGINEERING CHANGE NOTICE

FILE COPY

Page 1 of ~~21~~ 22

1. ECN ~~133824~~

Proj. ECN W-105-172

2. ECN Category (mark one)	3. Originator's Name, Organization, MSIN, and Telephone No.		4. Date
Supplemental ☒	K.L. EWER, KEH, E6-04, 6-1294		3-19-92
Direct Revision ☐	5. Project Title/No./Work Order No. W-105/ 242-A EVAP RETTN BASINS	6. Bldg./Sys./Fac. No. 242-AL	7. Impact Level / SC 3EQ / 3
Change ECN ☐			
Temporary ☐			
Supersedure ☐	8. Document Number Affected (include rev. and sheet no.) SEE BLOCK 12	9. Related ECN No(s). SEE BLOCK 12	10. Related PO No. N/A
Discovery ☐			
Cancel/Void ☐			

11a. Modification Work	11b. Work Package Doc. No.	11c. Complete Installation Work	11d. Complete Restoration (Temp. ECN only)
☐ Yes (fill out Blk. 11b)	N/A	N/A	N/A
☒ No (NA Blks. 11b, 11c, 11d)		Cog. Engineer Signature & Date	Cog. Engineer Signature & Date
UKN	UKN		

12. Description of Change

SC 3

DOCUMENTS AFFECTED:

H-2-79581, SH 1, REV 0
H-2-79592, SH2, REV 0
H-2-79649, SH 1, REV 0
H-2-79649, SH 2, REV 0
H-2-79653, SH1, REV 0
H-2-79653, SH2, REV 0
H-2-79654, SH1, REV 0
H-2-79654, SH2, REV 0

SPEC W105-C3, REV 0

RELATED ECNS:

W-105-120 } REFERENCE ONLY
W-105-145 }
W-105-135 REF ONLY
W-105-180 REF ONLY

CMW 5-14-92

See Page 19 of 22 for Professional Engineer Stamp.

(CONT ON PAGE 3)

JAN 1993 RECEIVED EDMC

13a. Justification (mark one)	13b. Justification Details
Criteria Change ☒	ITEMS 9, 12-17; LOI 93 - DIRECTS KEH TO PROVIDE LEAK DETECTION INSTRUMENTATION AT CATCH BASINS WITH LOCAL ANNUNCIATION & ALARM AT 242-A EVAP.
Design Improvement ☐	
Environmental ☐	
As-Found ☐	ITEMS 1-8, 10-19; LOI 95 - PROVIDE CONTINUOUS LIQUID LEVEL INSTRUMENTATION FOR BASINS (6" NORTH SAMPLE PORT RISER) AND LEACHATE SUMPS (4" LEACHATE RISER) WITH LOCAL READ-OUT & 242-A ALARMS
Facilitate Const. ☐	
Const. Error/Omission ☐	
Design Error/Omission ☐	

14. Distribution (include name, MSIN, and no. of copies)

EDC EDC

KEH DISTRIBUTION		J. J. Huston	S1-54
Const Doc Cntl	E2-50	M. N. Islam	R3-08
WHC DISTRIBUTION		D. R. Shreve	R3-30
Project Files	R1-28	L. R. Tollbom (PE)	R3-30
S. A. Burris	T1-30	M. A. White	R1-43
J. K. Epperley	R1-29	J. D. Williams	H4-57
E. R. Hamm	S4-65	R. B. Wurz	S5-14
STA. 6	T2-03	DOE/A. G. Lassila	A5-18
STA. 10	A3-87		
Lupe Garza	L6-76		

RELEASE STAMP

OFFICIAL RELEASE BY WHC (5)
DATE JUL 23 1992
Sta. 4

A-7900-013 (11/88)

ENGINEERING CHANGE NOTICE

1. ECN (use no. from pg. 1) W-105-172

15. Design Verification Required	16. Cost Impact		17. Schedule Impact (days)
	ENGINEERING	CONSTRUCTION	
☐ Yes	Additional ☒ $ 7,800	Additional ☒ $ 50 K (Rom)	Improvement ☐
☒ No	Savings ☐ $	Savings ☐ $	Delay ☒ 5 Days

18. Change Impact Review: Indicate the related documents (other than the engineering documents identified on Side 1) that will be affected by the change described in Block 12. Enter the affected document number in Block 19.

SDD/DD	☐	Seismic/Stress Analysis	☐	Tank Calibration Manual	☐
Functional Design Criteria	☐	Stress/Design Report	☐	Health Physics Procedure	☐
Operating Specification	☐	Interface Control Drawing	☐	Spares Multiple Unit Listing	☐
Criticality Specification	☐	Calibration Procedure	☐	Test Procedures/Specification	☐
Conceptual Design Report	☐	Installation Procedure	☐	Component Index	☐
Equipment Spec.	☐	Maintenance Procedure	☐	ASME Coded Item	☐
Const. Spec.	☐	Engineering Procedure	☐	Human Factor Consideration	☐
Procurement Spec.	☐	Operating Instruction	☐	Computer Software	☐
Vendor Information	☐	Operating Procedure	☐	Electric Circuit Schedule	☐
OM Manual	☐	Operational Safety Requirement	☐	ICRS Procedure	☐
FSAR/SAR	☐	IEFD Drawing	☐	Process Control Manual/Plan	☐
Safety Equipment List	☐	Cell Arrangement Drawing	☐	Process Flow Chart	☐
Radiation Work Permit	☐	Essential Material Specification	☐	Purchase Requisition	☐
Environmental Impact Statement	☐	Fac. Proc. Samp. Schedule	☐		☐
Environmental Report	☐	Inspection Plan	☐		☐
Environmental Permit	☐	Inventory Adjustment Request	☐		☐

N/A

19. Other Affected Documents: (NOTE: Documents listed below will not be revised by this ECN.) Signatures below indicate that the signing organization has been notified of other affected documents listed below.

Document Number/Revision	Document Number/Revision	Document Number/Revision
	N/A	

20. Approvals

Signature	Date
OPERATIONS AND ENGINEERING	
Cog./Project Engineer	6-10-92
Cog./Project Engr. Mgr.	6-11-92
QA	7-21-92 6-12-92
Safety	
Security	
Proj.Prog./Dept. Mgr.	
Def. React. Div.	
Chem. Proc. Div.	
Def. Wst. Mgmt. Div.	
Adv. React. Dev. Div.	
Proj. Dept.	
Environ. Div.	7-21-92 6-11-92
IRM Dept.	
Facility Rep. (Ops)	
Other	DRS 7-17-92 6-11-92
	7/16/92
	7/16/92

Signature	Date
ARCHITECT-ENGINEER	
PE	5/15/92 4/14/92
QA	4-14-92
Safety	5-15-92 4-8-92
Design	5-14-92 4-8-92
Other SPECS.	4/13/92
ENV.	4-13-92
CQA.	5-18-92 6-14-92
DEPARTMENT OF ENERGY	
ADDITIONAL	

A-7900-013R (11/88)

12. DESCRIPTION OF CHANGE: (CONT)

H-2-79581, SH 1, REV 0:

1. REVISE DRAWING LIST PER PAGE 4.

H-2-79649, SH1, REV 0:

2. REVISE TITLE BLOCK & INSTL DETAIL PER PAGE 5.
3. REVISE DETAIL 2 PER PAGE 6.
4. REVISE DETAIL 1, VIEW B & SECTION A PER PAGE 7.
5. ADD NOTE AS FOLLOWS: " 7. OPERATIONS AND MAINTENANCE MANUAL AND SPARE PARTS LIST WILL BE PROVIDED FOR LE-*-1&-2, LI-*-1&-2, LT-*-1&-2 AND LDE-*-1&-2."

ADD THE FOLLOWING SKETCHES TO NEW DRAWING SHEET 3:

6. TITLE BLOCK & INSTL DETAIL PER PAGE 8.
7. DETAIL 6 PER PAGE 9.
8. DETAIL 5, DETAIL 10 AND SECTION C PER PAGE 10.
9. BASIN LEVEL INTERCONNECTION DIAGRAM PER PAGE 11.
10. DETAIL 7 CATCH BASIN LDE MOUNTING PER PAGE 12.
11. DETAIL 8 LEACHATE/BASIN LEVEL IND PER PAGE 13.
12. ADD REFERENCE TO TITLE BLOCK REFERENCES AT ZONE A4; "HPS I-2-7 HANFORD PLANT STANDARD - EQUIPMENT NAMEPLATES"
13. TABLE I AND TABLE II PER PAGE 22.

H-2-79649, SH 2, REV 0:

14. REVISE TITLE BLOCK & DETAIL 3 PER PAGE 14.
15. REVISE LEACHATE LEVEL INTERCONNECTION DIAGRAM PER PAGE 15.

H-2-79653, SH1, REV 0:

16. REVISE WIRING DIAGRAM & GENERAL NOTES PER PAGE 20.

H-2-79653, SH2, REV 0:

17. REVISE WIRING DIAGRAM PER PAGE 21.

H-2-79654, SH 1, REV 0:

18. REVISE TITLE BLOCK, GENERAL NOTES, MATL LIST & PLC DETAIL PER PAGE 16.

H-2-79654, SH2, REV 0:

19. REVISE TITLE BLOCK & DETAIL 2 PER PAGE 17.

SPECIFICATION W105-C3, SECTION 13400, REV 0:

20. REVISE PAGE 13440-17 PER PAGE 18.

H-2-79592, SH 2, REV 0:

21. REVISE DETAILS 22 & 26 PER PAGE 19.

BASINS AND LINERS

DRAWING No	REV No	INDEX No	BLDG No	TITLE
H-2-79586	1	0110	242AL	CIVIL SITE PLAN & FENCE DET
H-2-79590	2	0401	242AL	CIVIL PLAN, SECTIONS & DETAILS CELL BASIN BOTTOM LINER
H-2-79591	2	0401	242AL	CIVIL PLAN SECTIONS & DET CELL BASIN TOP LINER
H-2-79592, SH 1	2	0401	242AL	CIVIL SECTIONS & DETAILS CELL BASIN
H-2-79592, SH 2	0	0401	242AL	CIVIL SECTIONS & DETAILS CELL BASIN
H-2-79593	2	0401	242AL	CIVIL PLAN, SECTION & DET CATCH BASIN
H-2-79601, SH 1	0	7004	242AL	P & ID 242-A EVAP & PUREX PDD/ASD LEGEND
H-2-79601, SH 2	0	7004	242A/242AL	P & ID 242-A EVAP BLDG & XCY PIPING
H-2-79601, SH 3	0	7004	242AL	P & ID 242-A EVAP RETENTION BASINS
H-2-79601, SH 4	0	7004	242AL	P & ID 242-A EVAP TEMPORARY STORAGE MODULES
H-2-79602, SH 1	0	7004	242AL	P & ID PUREX PDD/ASD LIFT STATION & XCY PIPING
H-2-79602, SH 2	0	7004	242AL	P & ID PUREX PDD/ASD RETENTION BASINS
H-2-79602, SH 3	0	7004	242AL	P & ID PUREX PDD/ASD TEMPORARY STORAGE MODULES
H-2-79604	0	0110/0304	200E/242AL	PIPING PLOT AND KEY PLANS 242-A EVAP-PUREX PDD/ASD STREAMS
H-2-79605	0	0110/0304	200E/242AL	PIPING PLAN SECT & DET 242-A EVAP & PUREX PDD/ASD STREAMS
H-2-79606	0	0110/0304	200E/242AL	PIPING PLAN & SECTS PUREX PDD/ASD STREAM
H-2-79607	0	0110/0304	200E/242AL	PIPING PLAN SECT & DETS PUREX PDD/ASD STREAM
H-2-79608	0	0110/0304	200E/242AL	PIPING PLAN SECT & DET 242-A EVAP & PUREX PDD/ASD STREAMS
H-2-79609	0	0110/0304	200E/242AL	PIPING PLANS 242-A EVAP & PUREX PDD/ASD STREAMS
H-2-79610	0	0110/0304	200E/242AL	PIPING PLAN RETENTION BASINS
H-2-79611	0	0110/0304	242A/242AL	PIPING PLAN SECTIONS AND ISOMETRIC 242-A EVAP STREAM
H-2-79612	0	8407	242AL	PIPING PLAN CATCH BASIN 242AL-41
H-2-79613	0	8407	242AL	PIPING PLAN CATCH BASIN 242AL-42
H-2-79614	0	8407	242AL	PIPING PLAN CATCH BASIN 242AL-43
H-2-79615	0	8407	242AL	PIPING PLAN CATCH BASIN 242AL-44
H-2-79616	0	8407	242AL	PIPING SECTIONS CATCH BASINS 242AL-41-42-43-44
H-2-79617	0	8407	242AL	PIPING SECTIONS CATCH BASINS 242AL-41-42-43-44
H-2-79618	0	8407	242AL	PIPING DETAILS CATCH BASINS 242AL-41-42-43-44
H-2-79619	0	0304	200E/242AL	PIPING PORTABLE MANIFOLD ASSEMBLY PLANS, SECTS & DETAILS
H-2-79620, SH 1	0	2600	242AL	PIPING ELEV SECTS & DETS LEACHATE PUMP ASSEMBLY
H-2-79620, SH 2	0	2600	242AL	PIPING ELEV SECTS & DETS PORTABLE PUMP ASSEMBLY
H-2-79620, SH 3	0	2600	242AL	PIPING ELEV SECTS & DETS PORTABLE PUMP ASSEMBLY
H-2-79621	0	2600	242AL	PIPING PUMP SUPPORT ASSEMBLIES & DETAILS
H-2-79622	0	2600	242AL	PIPING WHEEL SUPPORT ASSEMBLIES & DETAILS
H-2-79623	0	0110/0304	200E/242AL	PIPING PROFILE 242-A EVAP-PUREX PDD/ASD STREAMS
H-2-79633	0	0110/0304	242AL	PIPE SUPPORTS
H-2-79634	0	0110/0304	242AL	PIPE SUPPORTS
H-2-79649, SH 1	0	5901	~~200E~~ 242AL	INSTRUMENTATION ~~WIRING ARR &~~ DETAILS LEACHATE LEVEL & WIRING RETENTION BASIN
H-2-79649, SH 2	0	5901/5903	~~200E~~	INSTRUMENTATION ~~WIRING ARR &~~ DETAILS LEACHATE LEVEL & WIRING RETENTION BASIN
H-2-79649,SH3	0	5901/5903	242AL	INSTRUMENTATION BASIN LEVEL DETAILS & WIRING RETENTION BASIN
H-2-79653,SH1	0	5903	242-A/242-AL	INSTM UHF/PLC WIRING DIAGRAM
H-2-79653,SH2	0	5903	242-A	INSTM UHF/PLC WIRING DIAGRAM
H-2-79654,SH1	0	5901	242-A/242-AL	INSTM UHF/PLC MOUNTING DETAILS
H-2-79654,SH2	0	5901	242-A/242-AL	INSTM UHF/PLC MOUNTING DETAILS

REF ECN W-105-145

REVISE AS SHOWN

ADD

KAISER ENGINEERS HANFORD

ENGINEERING CHANGE NOTICE SKETCH

Ref. Dwg. H-2-79581 | Sh. 1 | Rev. 0 | Prepared By K.L. EWER | Checked By | ECN No. W-105-172 | Page 4/4

KEH-0159.00 (01/88)

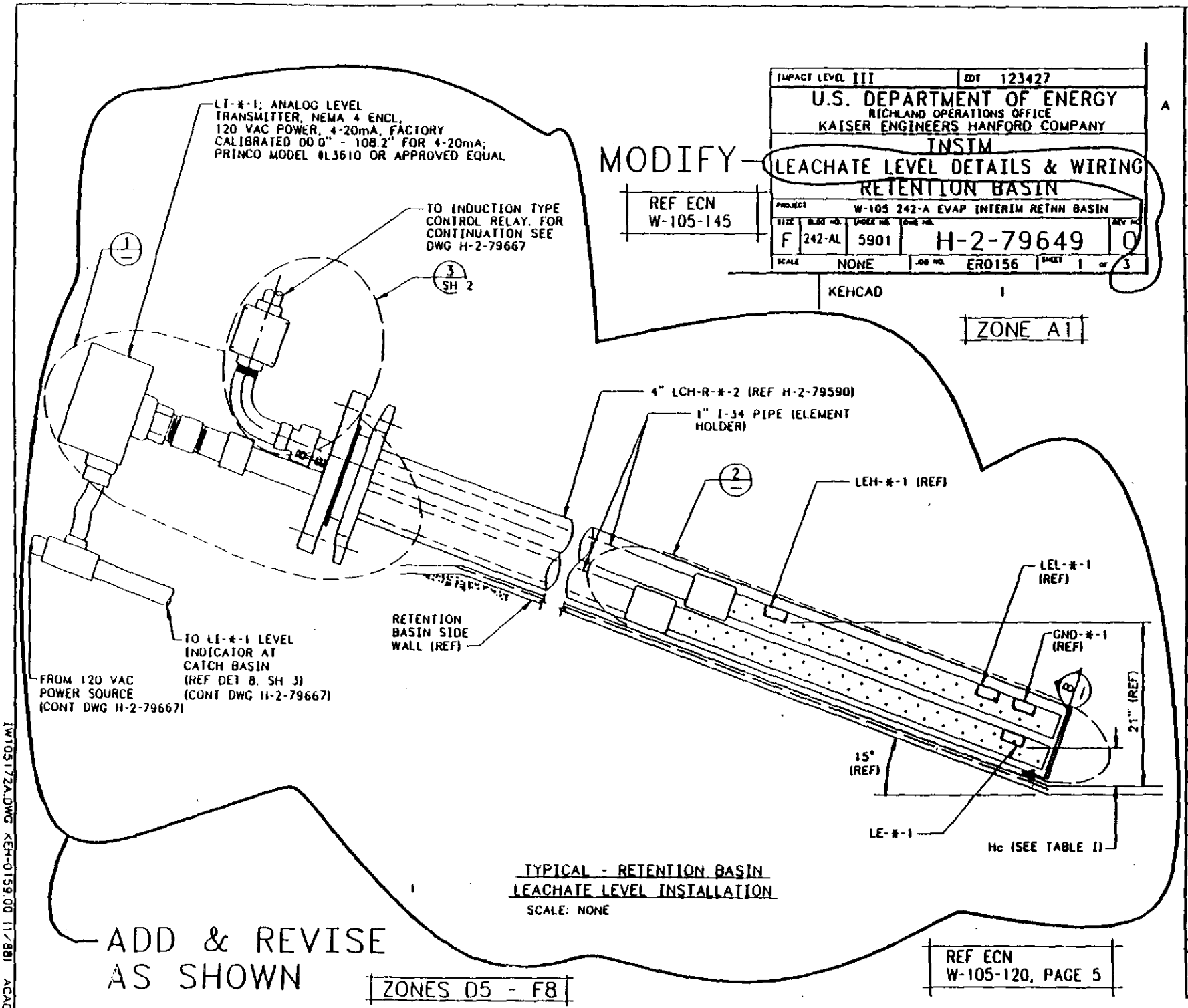

KAISER ENGINEERS HANFORD

ENGINEERING CHANGE NOTICE SKETCH

Ref. Dwg.	Sh.	Rev.	Prepared By	Checked By	ECN No.	Page
H-2-79649	1	0	K.L.EWER		W-105-172	5/22

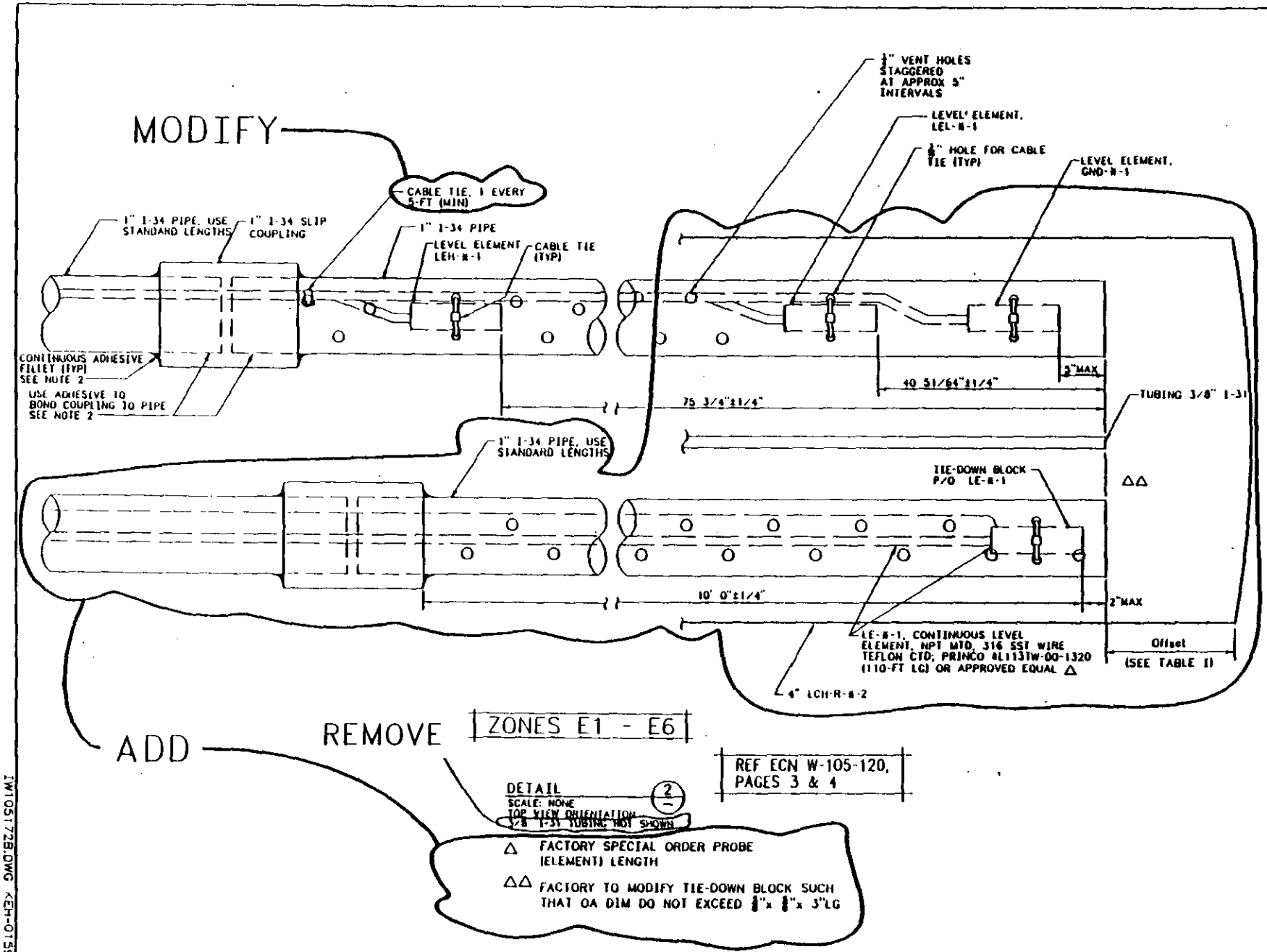

KAISER ENGINEERS
HANFORD

ENGINEERING CHANGE NOTICE SKETCH

Ref. Dwg.	Sh.	Rev.	Prepared By	Checked By	ECN No.	Page
H-2-79649	1	0	K.L.EWER		W-105-172	6/22

1W105172B.DWG KEH-0159.00 (1/88) ACAD

KAISER ENGINEERS HANFORD	ENGINEERING CHANGE NOTICE SKETCH					
Ref. Dwg.	Sh.	Rev.	Prepared By	Checked By	ECN No.	Page
H-2-79649	1	0	K.L.EWER		W-105-172	7/22

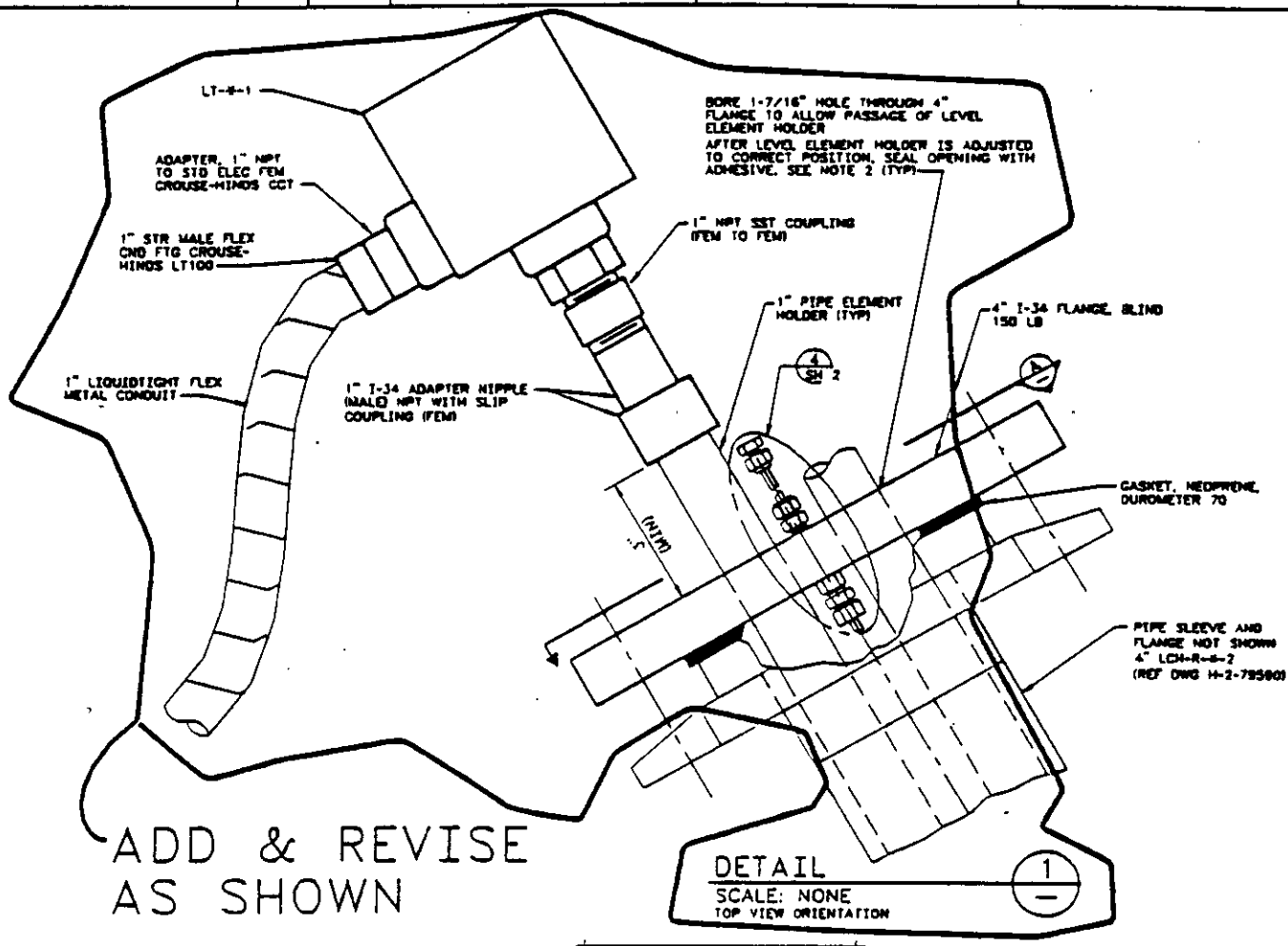

ADD & REVISE AS SHOWN

DETAIL 1
SCALE: NONE
TOP VIEW ORIENTATION

ZONES C3 - D4

ADD & REVISE AS SHOWN

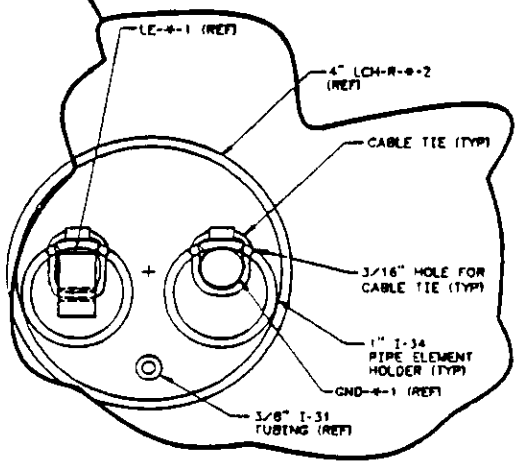

VIEW B
SCALE: NONE
ZONE B5

ADD & REVISE AS SHOWN

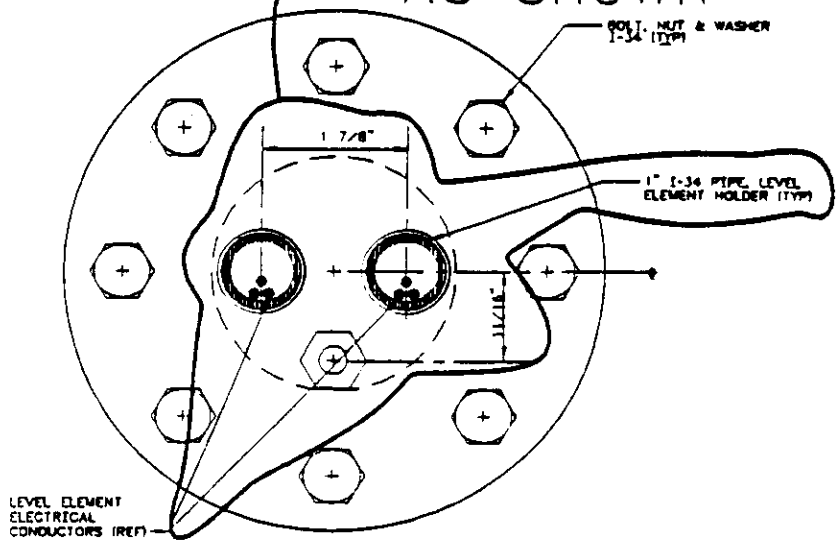

SECTION A
SCALE: NONE
ZONES A6 - C8

9 3 1 9 9 0 4 2 1 4 7

RETENTION BASIN	*
242 AL 42	42
242 AL 43	43
242 AL 44	44

NOTES:

FOR NOTES SEE SHEET 1.

IMPACT LEVEL	EDT
U.S. DEPARTMENT OF ENERGY RICHLAND OPERATIONS OFFICE KAISER ENGINEERS HANFORD COMPANY	
INSTM BASIN LEVEL DETAILS & WIRING RETENTION BASIN	
PROJECT	W-105 242-A EVAP INTERIM RETNN BASIN
SIZE F / BLDG NO. 242-AL / INDEX NO. 5901/5903 / DWG NO. H-2-79649 / REV NO. 0	
SCALE NONE / JOB NO. ER0156 / SHEET 3 OF 3	

KEHCAD 1

A

ZONE A1

ADD TO NEW SHEET 3

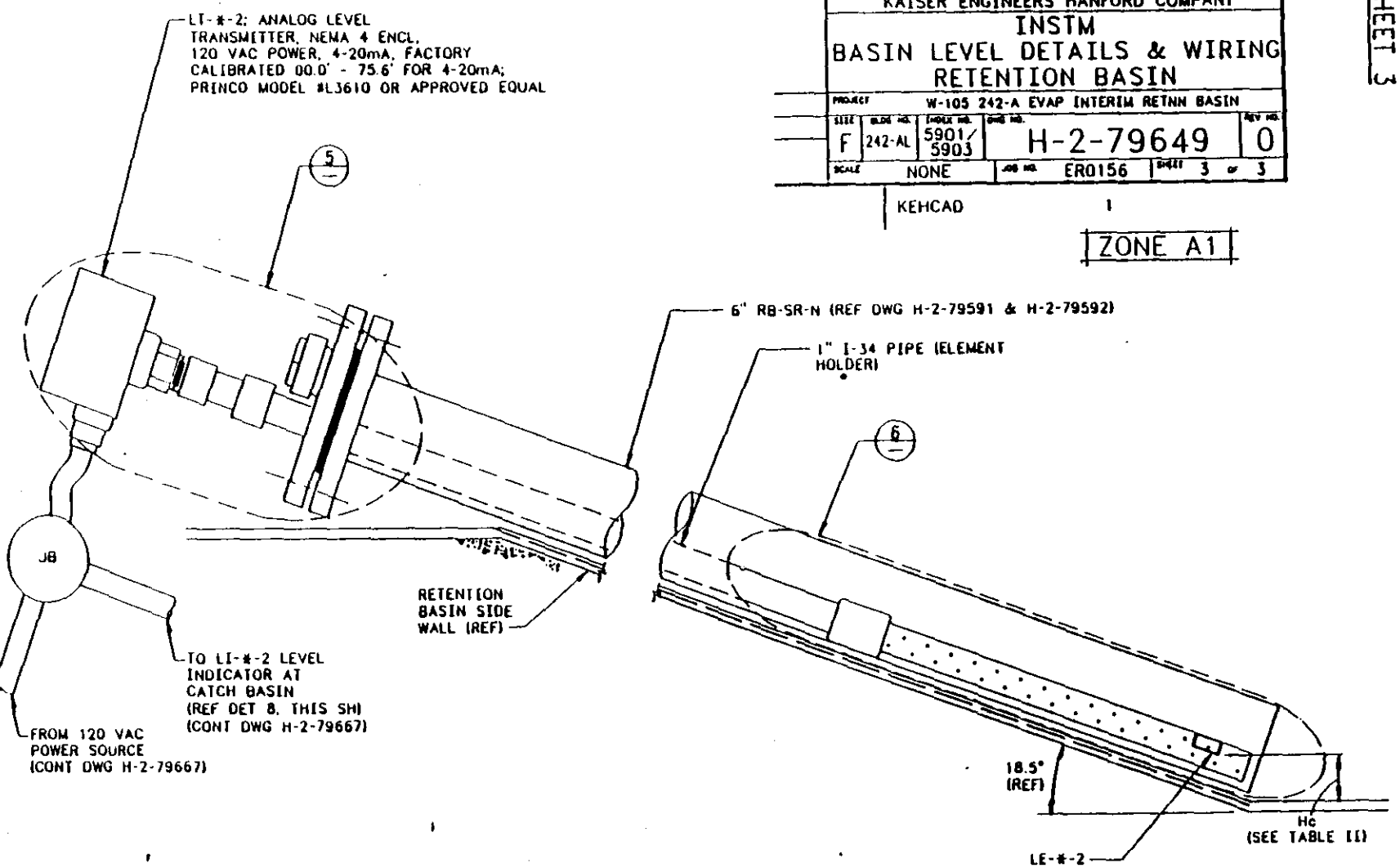

TYPICAL - RETENTION BASIN
N. SAMPLE PORT/BASIN LEVEL RISER INSTALLATION
SCALE: NONE

KAISER ENGINEERS HANFORD

ENGINEERING CHANGE NOTICE SKETCH

Ref. Dwg.	Sh.	Rev.	Prepared By	Checked By	ECN No.	Page
H-2-79649	1	0	K.L.EWER		W-105-172	8/22

W105172F.DWG KEH-0159.00 (1/88)

9 1 1 9 0 4 3 1 4 8

KAISER ENGINEERS
HANFORD

ENGINEERING CHANGE NOTICE SKETCH

Ref. Dwg.	Sh.	Rev.	Prepared By	Checked By	ECN No.	Page
H-2-79649	1	0	K.L.EWER	Curtis M. Mitchell	W-105-172	9/22

ADD TO NEW SHEET 3

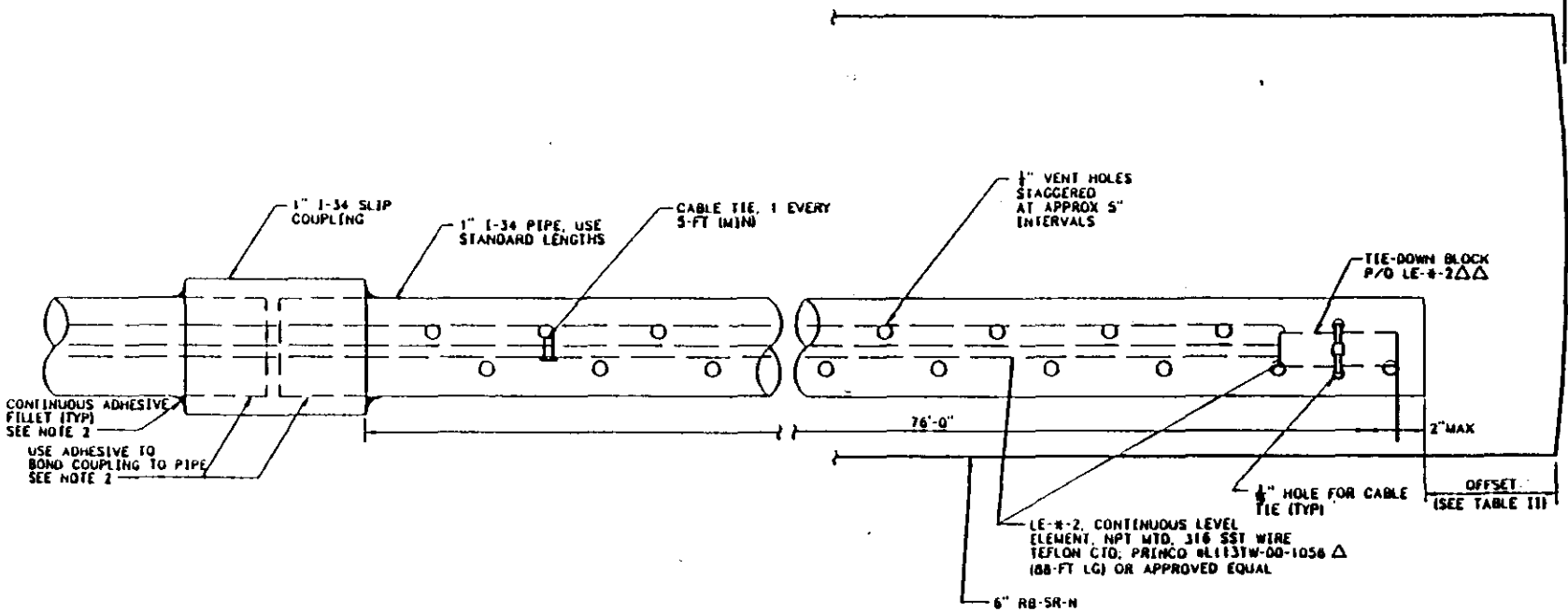

DETAIL 6/—
SCALE: NONE
TOP VIEW ORIENTATION

Δ FACTORY SPECIAL ORDER PROBE (ELEMENT) LENGTH

ΔΔ FACTORY TO MODIFY TIE-DOWN BLOCK SUCH THAT OA DIM DO NOT EXCEED 1/4"x 1/4"x 3"LG

IW105172C.DWG KEH-0159.00 11/88I ACAD

KAISER ENGINEERS HANFORD	ENGINEERING CHANGE NOTICE SKETCH					
Ref. Dwg.	Sh.	Rev.	Prepared By	Checked By	ECN No.	Page
H-2-79649	1	0	K.L.EWER	[illegible]	W-105-172	10/22

ADD TO NEW SHEET 3

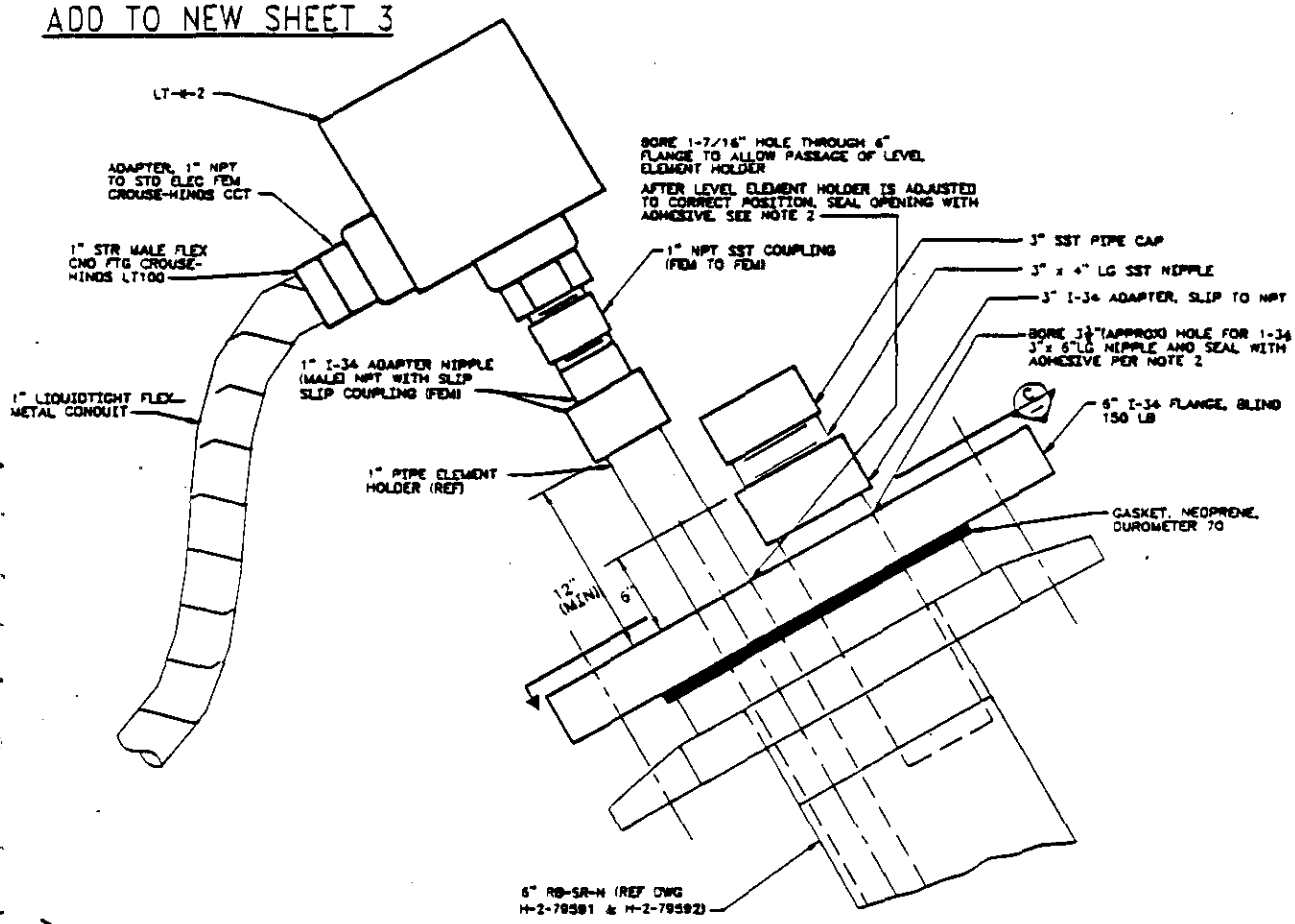

DETAIL 5
SCALE: NONE

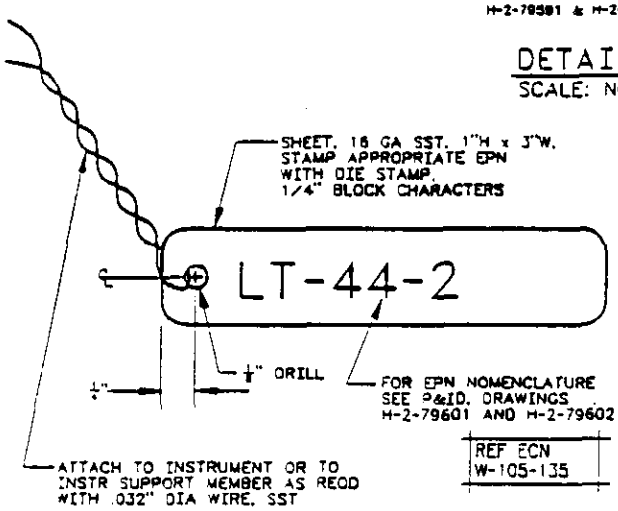

REF ECN W-105-135

DETAIL 9
SCALE: NONE
SH 1, 2 & 3

TYP - NAMETAG

TAG ALL FIELD INSTR CONSPICUOUSLY EXCEPT FOR THOSE ALREADY HAVING EQPT NAMEPLATES

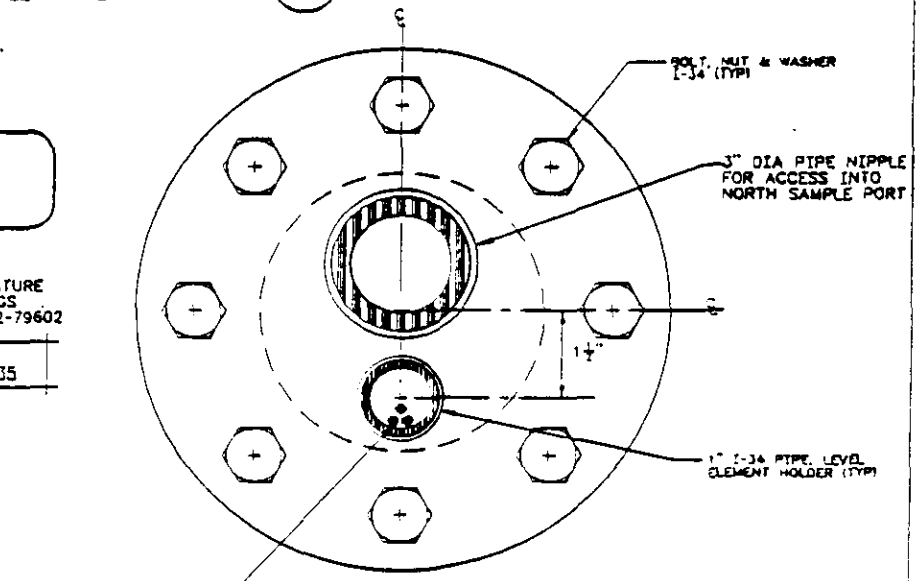

SECTION C
SCALE: NONE

KAISER ENGINEERS HANFORD	ENGINEERING CHANGE NOTICE SKETCH					
Ref. Dwg.	Sh.	Rev.	Prepared By	Checked By	ECN No.	Page
H-2-79649	1	0	K.L.EWER	4-2-92	W-105-172	11/22

ADD TO NEW SHEET 3

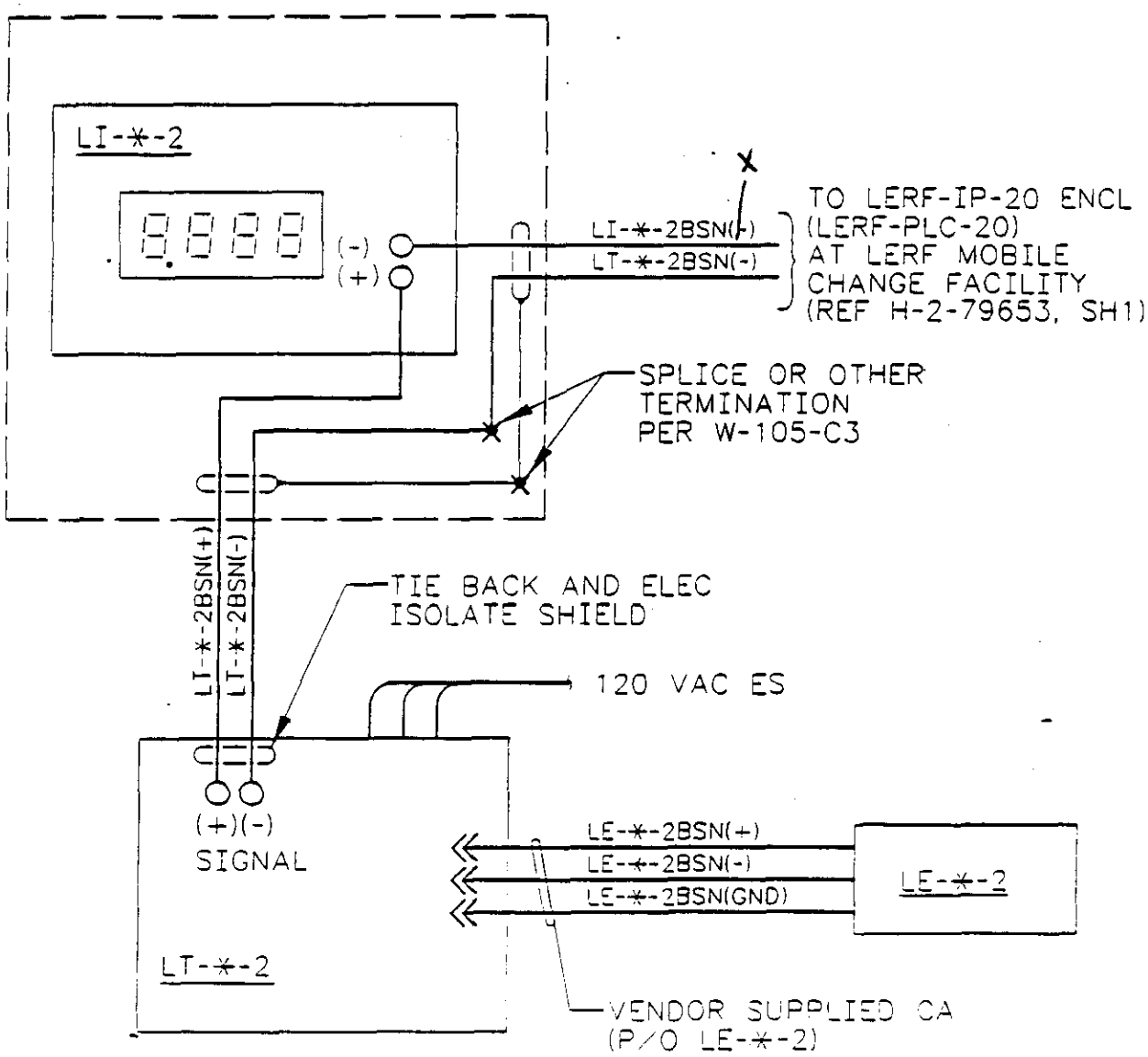

TYP - CONTINUOUS BASIN LEVEL INTERCONNECTION DIAGRAM

KAISER ENGINEERS HANFORD	ENGINEERING CHANGE NOTICE SKETCH					
Ref. Dwg.	Sh.	Rev.	Prepared By	Checked By	ECN No.	Page
H-2-79649	1	0	K.L.EWER		W-105-172	12/22

ADD TO NEW SHEET 3

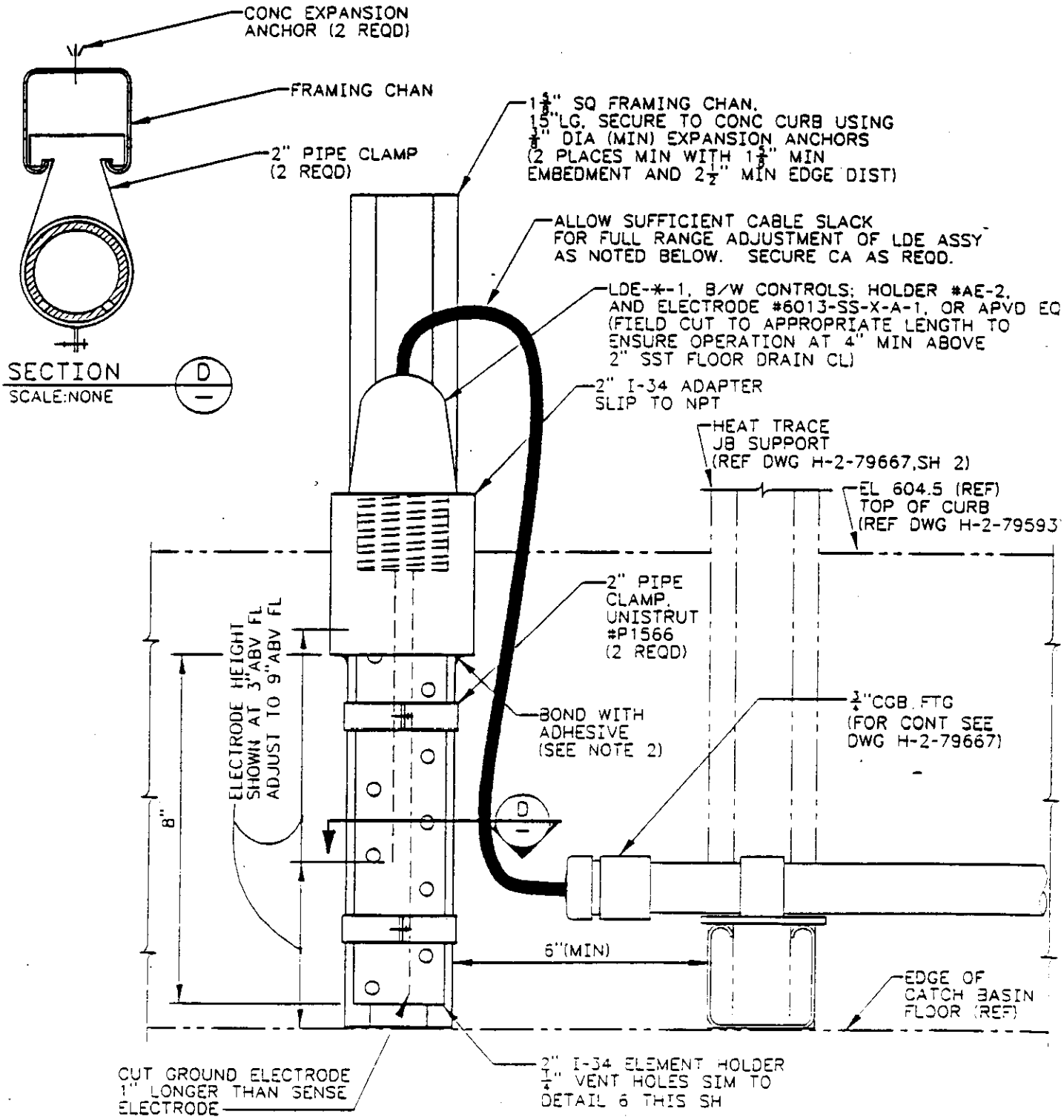

DETAIL 7
SCALE: NONE

TYP - CATCH BASIN LEAK DETECTOR MOUNTING

KAISER ENGINEERS HANFORD	ENGINEERING CHANGE NOTICE SKETCH					
Ref. Dwg. H-2-79649	Sh. 1	Rev. 0	Prepared By K.L.EWER	Checked By	ECN No. W-105-172	Page 13/22

ADD TO NEW SHEET 3

NAMEPLATE ATTACHED TO BACKPLATE; PER HPS I-2-7, SIZE 'C' ($\frac{3}{4}$"x 3"L) WITH $\frac{5}{32}$" HIGH LETTERS ENGRAVE AS NOTED BELOW (TYP)

LI-*-1 LEACHATE LVL (in)	LI-*-2 BASIN LVL (ft)
* - SUBSTITUTE BASIN: 42, 43, 44	* - SUBSTITUTE BASIN: 42, 43, 44

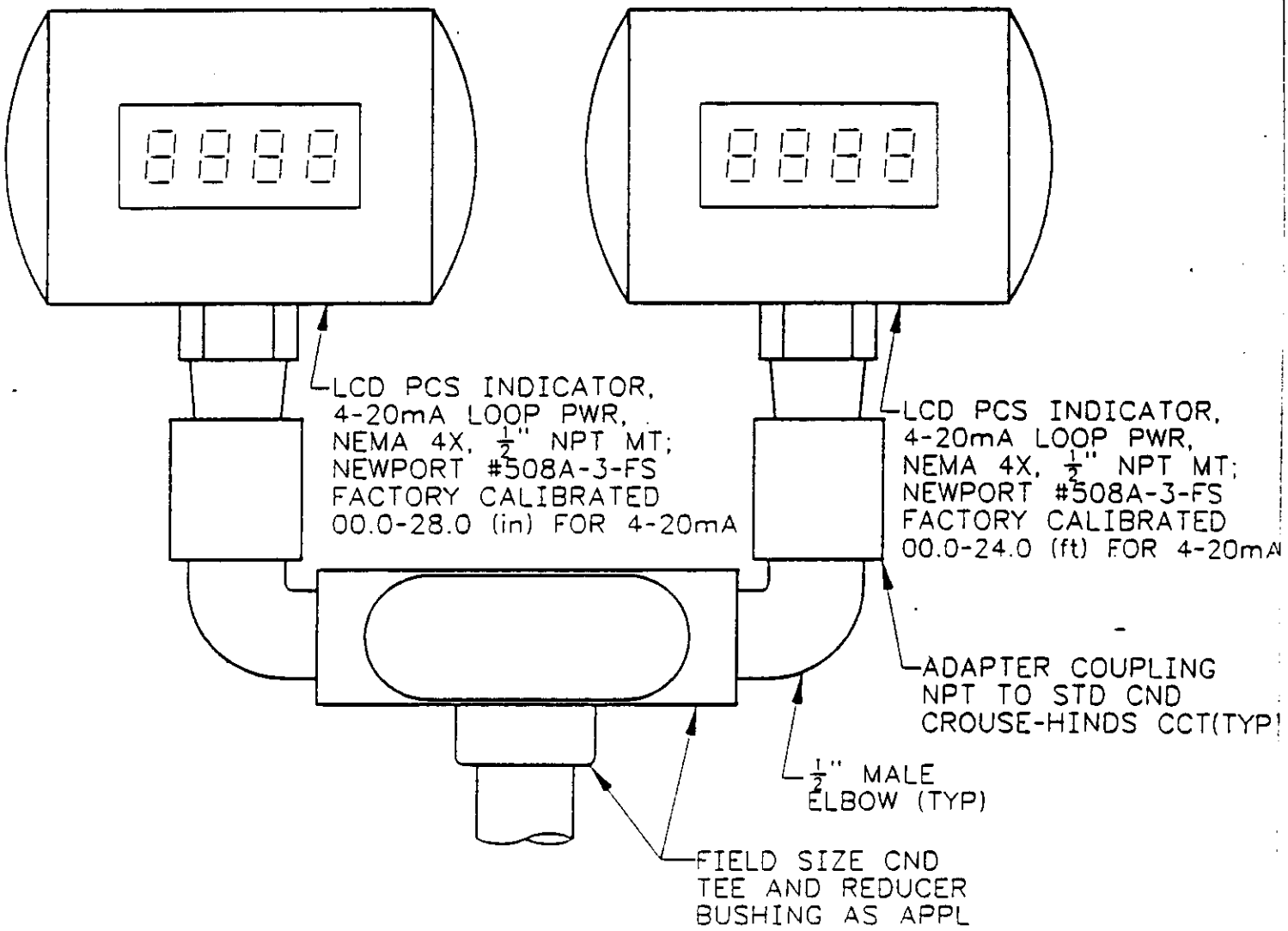

DETAIL 8/—

SCALE: NONE

TYP-LEACHATE/BASIN LEVEL INDICATORS

(FIELD LOCATE AT ELEC BACKPLATE REF ELEVATION 'H', DWG H-2-79667)

KAISER ENGINEERS HANFORD	ENGINEERING CHANGE NOTICE SKETCH					
Ref. Dwg.	Sh.	Rev.	Prepared By	Checked By	ECN No.	Page
H-2-79649	2	0	K.L.EWER	4-9-92	W-105-172	14/2

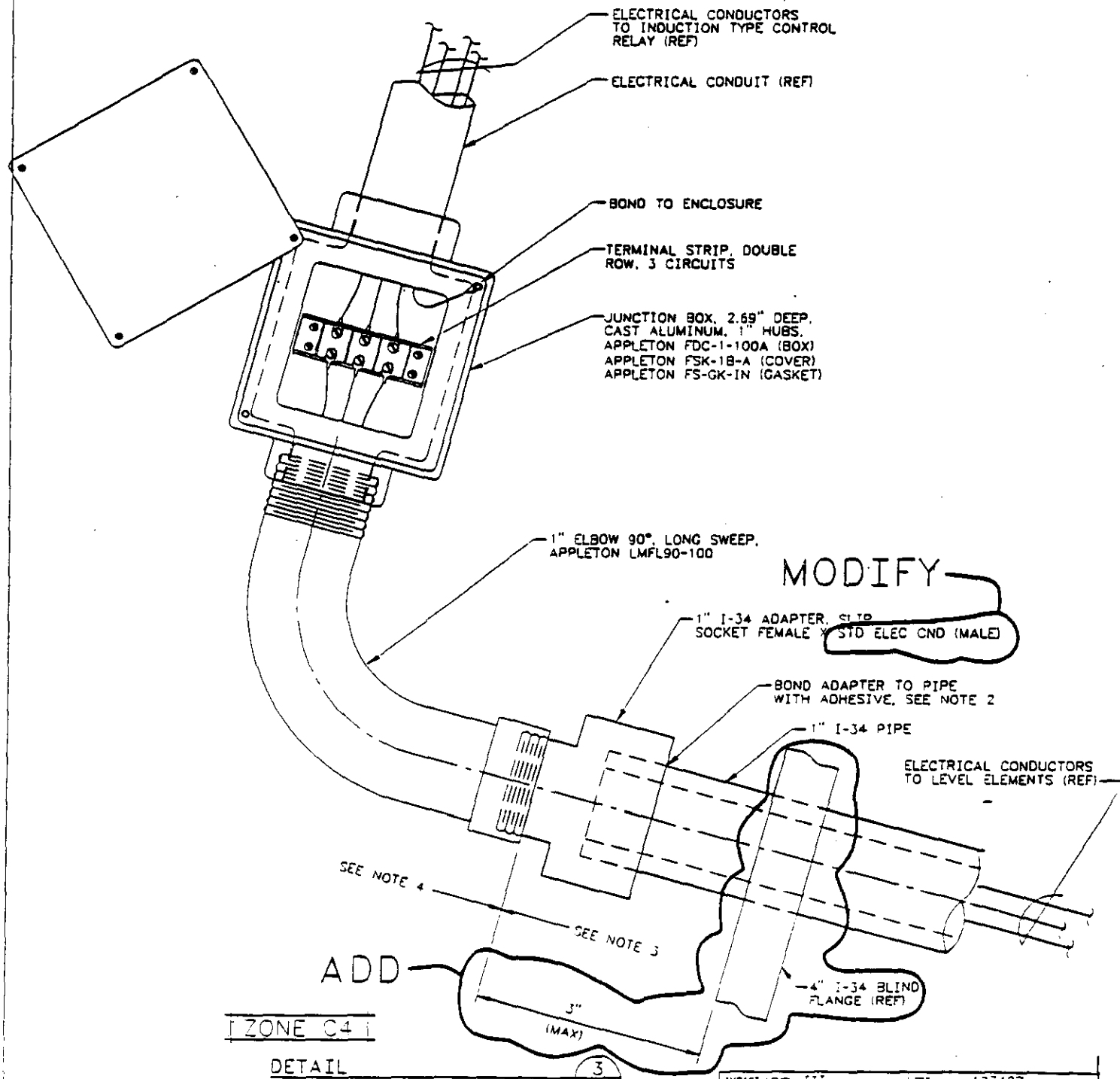

DETAIL 3 SH 1
SCALE: NONE
COVER SHOWN OPEN AND ROTATED TO EXPOSE BOX INTERIOR ARR

MODIFY

ZONE A11

REF ECN W-105-145

IMPACT LEVEL III	EDT 123427
U.S. DEPARTMENT OF ENERGY RICHLAND OPERATIONS OFFICE KAISER ENGINEERS HANFORD COMPANY	
INSTM LEACHATE LEVEL DETAILS & WIRING RETENTION BASIN	
PROJECT W-105 242-A EVAP INTREM RETNN BASIN	
F 242-A 5901 5903	H-2-79649 0
SCALE NONE	JOB NO. ER0156 SHEET 2 OF 3

KEHCAD

KAISER ENGINEERS HANFORD				ENGINEERING CHANGE NOTICE SKETCH		
Ref. Dwg. H-2-79649	Sh. 2	Rev. 0	Prepared By K.L.EWER	Checked By 7-5-92	ECN No. W-105-172	Page 15/22

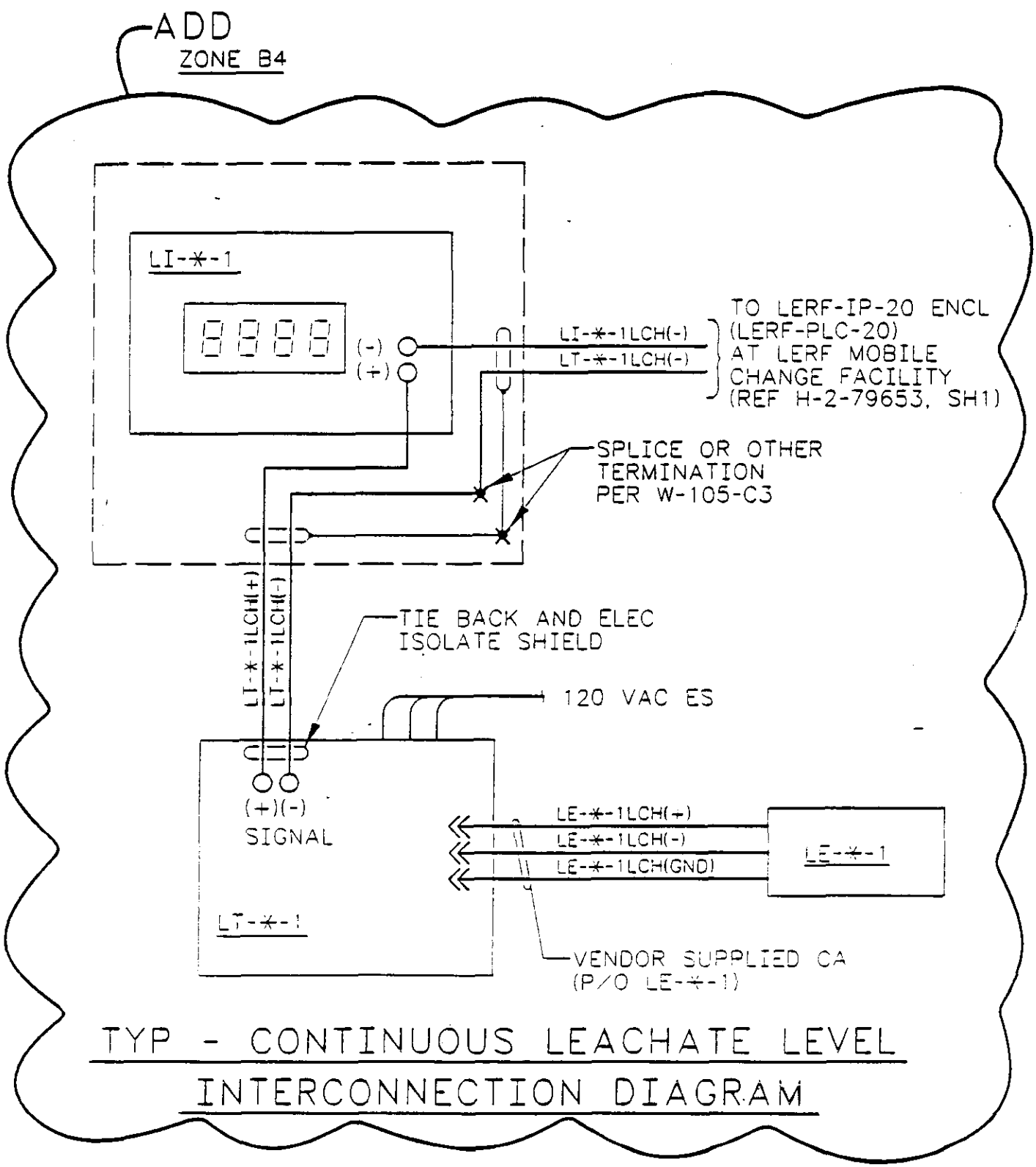

TYP - CONTINUOUS LEACHATE LEVEL INTERCONNECTION DIAGRAM

KAISER ENGINEERS HANFORD	ENGINEERING CHANGE NOTICE SKETCH					
Ref. Dwg.	Sh.	Rev.	Prepared By	Checked By	ECN No.	Page
H-2-79654	1	0	K.L.EWER	4-8-92	W-105-172	16

MATERIAL LIST

QTY	P/N	DESCRIPTION	MATL REF
AR	32	CHANNEL MOUNTING 1 5/8" GALVANIZED	UNISTRUT P1000
4	33	BOLT HILTI 1/4" X 2 3/4" MIN EMBED DEPTH 1 1/4"	HILTI ITEM 000453860
2	34	CLAMP PIPE 1"	UNISTRUT P3413
AR	35	WASHER STAR 1/4" STEEL	COMMERCIAL
3	36	TERMINAL BLOCK, 36 POINT FOR #10 TO #22 AWG	SQUARE D 9080 GK6
1	37	FUSE 250V SLOW BLOW 1-1/2 AMP FOR MODULE POWER SUPPLY	BUSSMAN MDX 1.5
1	38	MODULE, 16 ANALOG INPUT, SINGLE-ENDED W/ COMMON	ALLEN BRADLEY 1771-IFE
2	39	MODULE, 4 ANALOG OUTPUT, 4-20mA ISOLATED OUTPUTS	ALLAN BRADLEY 1771-OFE2

REVISE

ADD

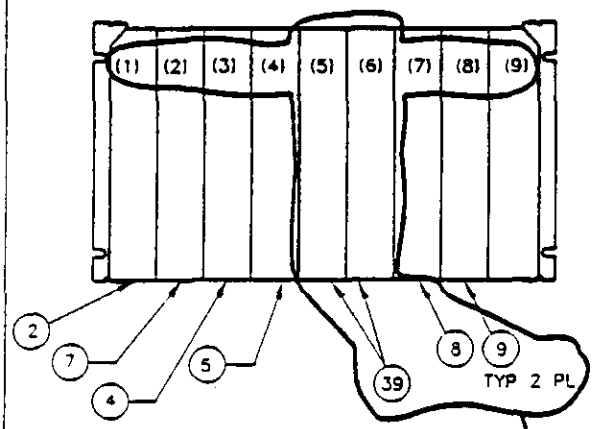

ZONE C3 EVAP-PLC-10

SCALE: NONE

SEE NOTES 7 & 13

ADD & REVISE AS SHOWN

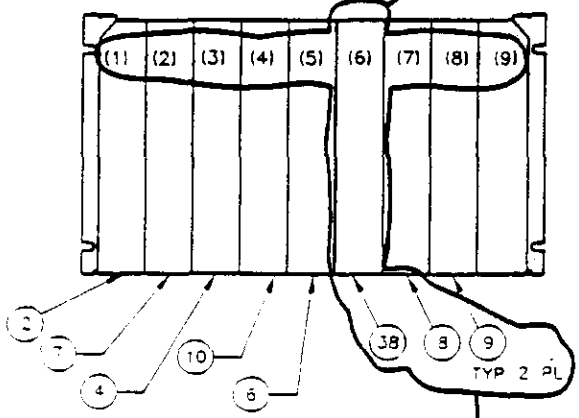

ZONE C5 LERF-PLC-20

SCALE: NONE

SEE NOTES 7 & 13

ZONES D1 & D2

GENERAL NOTES:

1. FIELD MOUNT TRIPOD AS SHOWN. USE THE TWO SMALL HOLES ON EACH BRACKET TO TEMPORARILY TACK THE TRIPOD INTO POSITION. DRILL PILOT HOLES THROUGH THE LARGER HOLES, AND FASTEN SCREWS (P/N 18) INTO STRUCTURE. COVER THE TRIPOD BRACKETS WITH ATCO 1821 TAR OR EQUIVA
2. SEE DRAWING H-2-79653 SH 1 FOR INSTRUMENT LABELING, STORING, CALIBRATING, AND TESTING REQUIREMENTS.
3. MATERIALS LISTED IN THE MATERIAL LIST MAY BE SUBSTITUTED WITH AN APPROVED EQUAL.
4. MOUNT 3 SECTIONS OF P/N 32 TO WALL STUDS (2 X 4 16" ON CENTER) USING P/N 22.
5. BUTT 3 SECTIONS OF P/N 32 TO THE EXISTING MOUNTING CHANNEL ENDS USING P/N 19.
6. FIELD MOUNT ENCLOSURES TO P/N 32 USING P/N 20 AND P/N 21.
7. SEE LERF-IP-20 AND EVAP-IP-10 MOUNTING DETAIL ON SHEET 2.
8. FOR LERF-LA-20 AND EVAP-LA-10 MOUNTING LOCATIONS SEE DRAWINGS H-2-79666 AND H-2-79664 RESPECTIVELY.
9. POINT ANTENNAS AT EACH OTHER.
10. OPERATIONS AND MAINTENANCE MANUALS WILL BE PROVIDED WITH EQUIPMENT
11. TERMINAL BLOCK TB1 (P/N 36) WILL BE MOUNTED IN EVAP-IP-10, AND NOT IN LERF-IP-20; FIELD MOUNT TB2 (P/N 36), AS REQD, SO AS TO PROVIDE MAXIMUM SEPARATION BETWEEN ANALOG SIGNALS AND 120 VAC POWER & CONTROL CONDUCTORS.
12. P/N 37 IS THE SPARE PART SUGGESTED BY THE PLC MANUFACTURER.
13. PLC CARD SLOTS ARE ARBITRARILY NUMBERED FROM LEFT TO RIGHT FOR REFERENCE ONLY.

REVISE

ZONES B1 & B2

ADD

MODIFY

ZONE A1

IMPACT LEVEL | CDT

U.S. DEPARTMENT OF ENERGY
RICHLAND OPERATIONS OFFICE
KAISER ENGINEERS HANFORD COMPANY

INSTM
UHF/PLC
MOUNTING DETAILS

PROJECT W-105 LERF 242-A EVAP PNDS INTERIM RETENTION BASINS

SIZE	PLANT NO.	INDEX NO.	DWG NO.	REV NO.
F	242-A 242-AL	5901	H-2-79654	0

SCALE NONE | JOB NO. ER0241 | SHEET 1 OF 2

KEHCAD

W105172J.DWG KEH-0159.00 11/88 ACAD

KAISER ENGINEERS HANFORD	ENGINEERING CHANGE NOTICE SKETCH					
Ref. Dwg.	Sh.	Rev.	Prepared By	Checked By	ECN No.	Page
H-2-79654	2	0	K.L.EWER	4-6-92	W-105-172	17/22

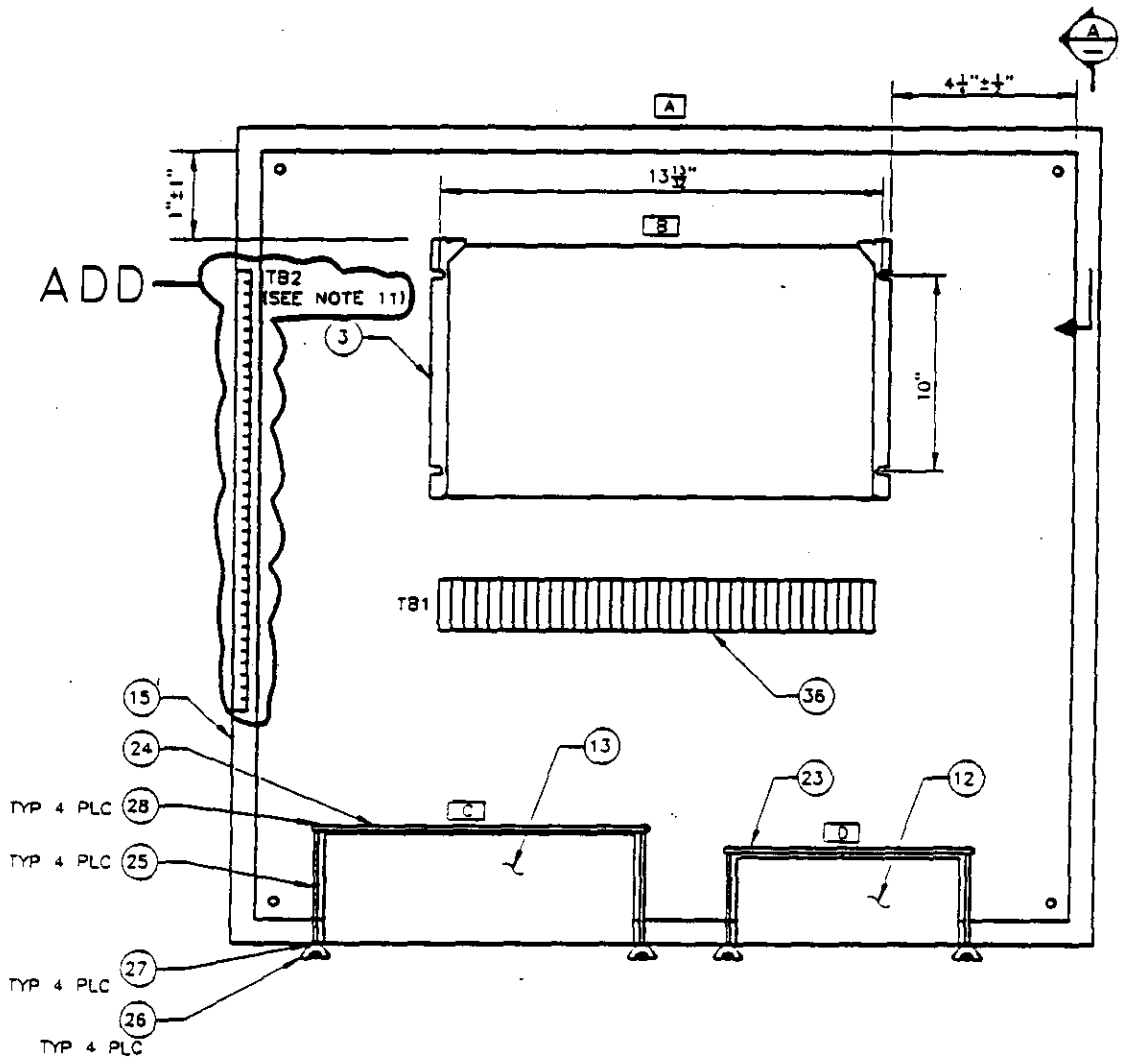

LERF-IP-20 AND EVAP-IP-10 ENCLOSURE MOUNTING DETAIL 2

SCALE: NONE
SEE NOTE 6 & 11

ZONES A4 - C5

MODIFY

ZONE A1

IMPACT LEVEL	CDT
U.S. DEPARTMENT OF ENERGY RICHLAND OPERATIONS OFFICE KAISER ENGINEERS HANFORD COMPANY	
INSTM UHF/PLC MOUTNING DETAILS	
PROJECT W-105 LERF 242-A EVAP CNDS INTERIM RETENTION BASINS	
SIZE F / DWG NO. 242-A 242-AL / INDEX NO. 5901 / UNIT NO. H-2-79654 / REV NO. 0	
SCALE NONE / JOB NO. ER0241 / SHEET 2 OF 2	

KEHCAD

KAISER ENGINEERS HANFORD	ENGINEERING CHANGE NOTICE SKETCH					
Ref. Dwg. SPEC CMW 10-12 W-105-C3, Sect 13440	Sh. NA	Rev. NA	Prepared By K.L.EWER	Checked By [illegible] 9-4-92	ECN No. W-105-172	Page 18/2

PIPE CODE I-34

Service:	Max Operating Press:	Max Operating Temp
LCH (Leachate)	60 psig	100 F

Size	One inch
Pipe	Centrifugally cast, fiberglass-reinforced epoxy thermoset resin pressure pipe as designated in ASTM D 2997, Classification RTPR Type II, Grade 1, Class C, minimum 60 mil pure resin corrosion barrier, and a constant smooth IPS OD. The carrier pipe is similar to FIBERCAST CENTRICAST PLUS RB-2530 pipe.
Wall Thickness	One inch diameter : 0.160 inch
Fittings	Fittings shall have the same working pressure or greater than the piping material in the piping system. Fittings shall be of the same resin systems as the pipe. Fittings are similar to standard FIBERCAST fittings for RB-2530 pipe.
Flanges	Fiberglass-reinforced epoxy thermoset resin with pressure rating equal or greater than the piping material. Flat face socket weld, drilling in accordance with ANSI B16.5 for Class 150. Flanges shall be from the same manufacturer as the piping given above.
Bolting	Alloy steel studs, ASTM A 193, Grade B8 and heavy hex nuts, ASTM A 194, Grade 8F. Bolts, nuts, washers requirement for Standard FIBERCAST FLANGES. Flange Size / Quantity / Description 4 inch / 8 / 5/8-11 x 4-1/4 bolts, nuts and washers ADD → 6 INCH / 8 / 3/4-10 x 4"L BOLTS, NUTS & WASHERS Use SAE standard stainless steel washers under all nuts and bolt heads, washers conforming to ANSI B18.22.1. Maximum torque on lubricated bolt threads - 35 pounds per foot. Maximum torque on dry bolts threads - 50 pounds per foot.
Gaskets	Use teflon bonded EPDM sheet, 3/16 inch thick full face gaskets with a hardness of 70 durometer on the Shore "A" scale.

KEH-0159.00 (01/88)

KAISER ENGINEERS
HANFORD

ENGINEERING CHANGE NOTICE SKETCH

Ref. Dwg.	Sh.	Rev.	Prepared By	Checked By	ECN No.	Page
H-2-79592	2	0	K.L.EWER	4/8/92	W-105-172	19/22

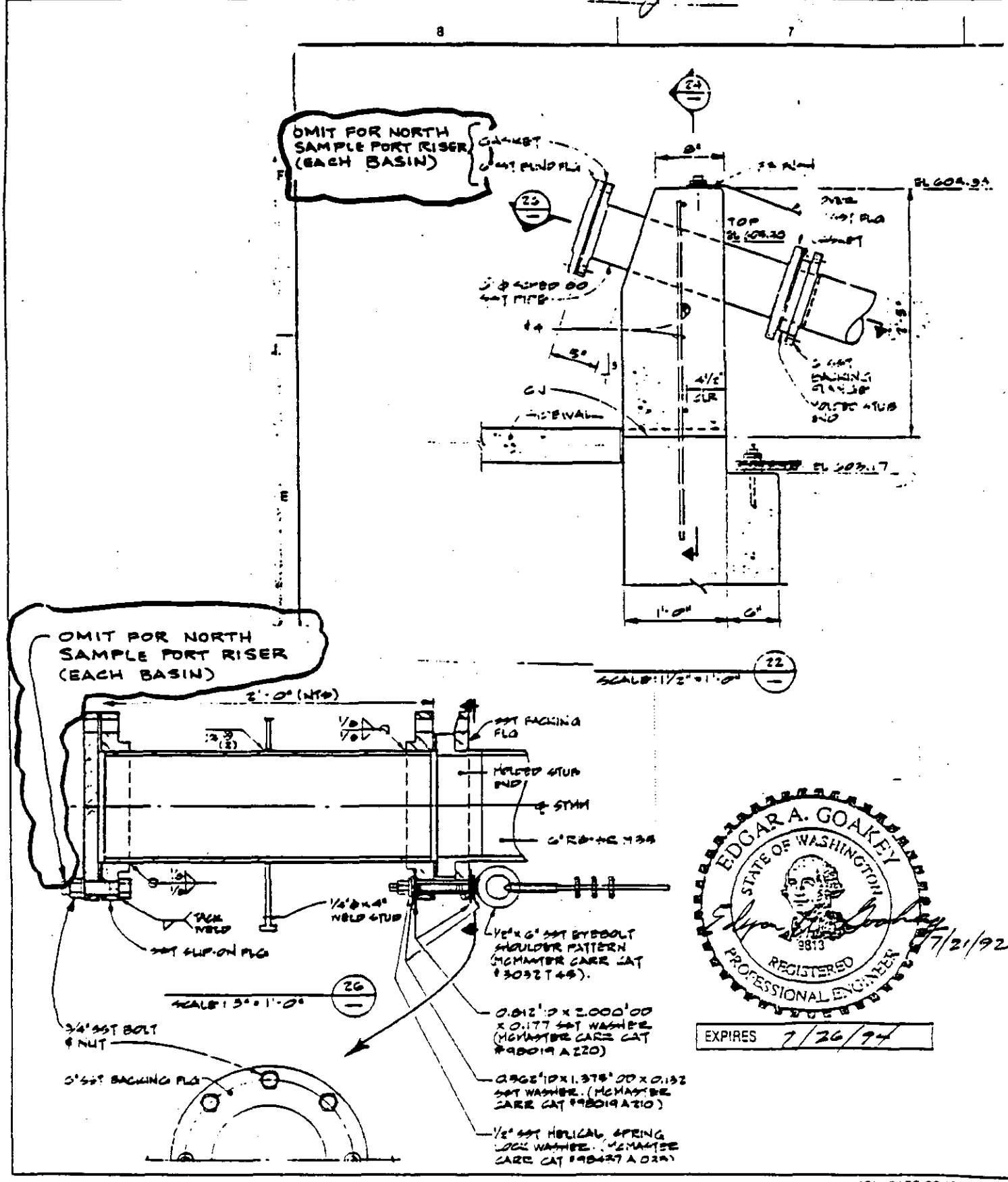

KEH-0159.00 (01/88)

KAISER ENGINEERS HANFORD	ENGINEERING CHANGE NOTICE SKETCH					
Ref. Dwg. H-2-79653	Sh. 1	Rev. 0	Prepared By K.L.EWER	Checked By	ECN No. W-105-172	Page 20/22

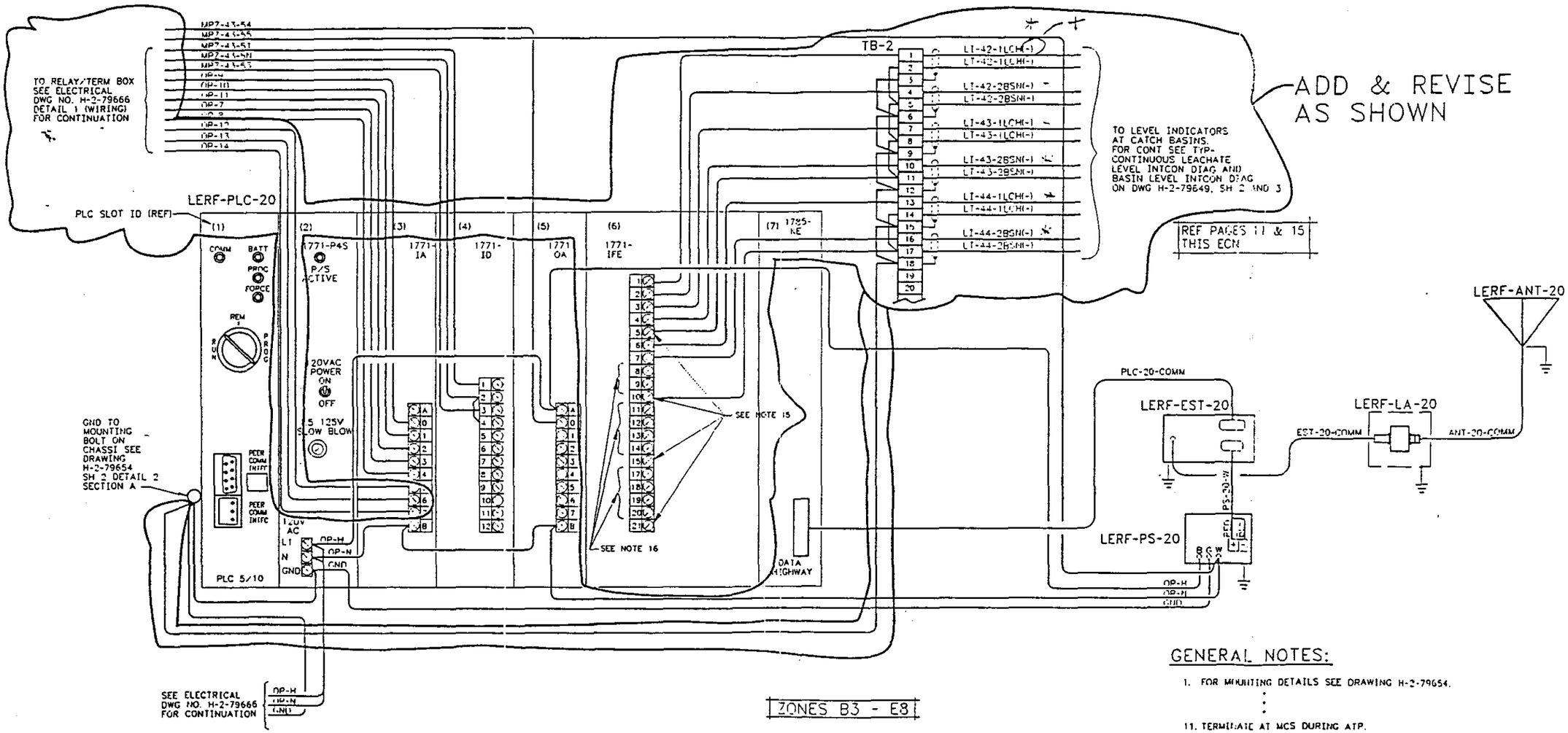

ZONES B3 - E8

242-AL MOBILE CHANGE FACILITY WIRING DIAGRAM

SCALE: NONE
SEE NOTE 13

ADD & REVISE

ZONES B1 & B2

GENERAL NOTES:

1. FOR MOUNTING DETAILS SEE DRAWING H-2-79654.

⋮

11. TERMINATE AT MCS DURING ATP.
12. REMOVE STOCK POWER CORD FROM LERF-PS-20 AND EVAP-PS-10, AND CONNECT WIRES AS SHOWN.
13. SEE ELEM DIAGRAMS FOR GATE ALARM & LEACHATE PUMP STATUS AND MOV-43-1 ON DWG H-2-79668, SH 5.
14. THE MINIMUM BENDING RADIUS FOR THE HELIAX CABLE P/N 1 IS 5".
15. ALL COMMONS ARE ELECTRICALLY TIED TOGETHER INSIDE THE 1771-IFE ANALOG INPUT MODULE.
16. INSTALL WIRE JUMPERS ACROSS ALL UNUSED CHANNELS AT THE 1771-IFE MODULE TO REDUCE NOISE IAW VER RECM.

KAISER ENGINEERS
HANFORD

ENGINEERING CHANGE NOTICE SKETCH

Ref. Dwg	Sh.	Rev.	Prepared By	Checked By	CCN No.	Page
H-2-79653	2	0	K.L.EWER	Cristin M. Nutt	W-105-172	21/22

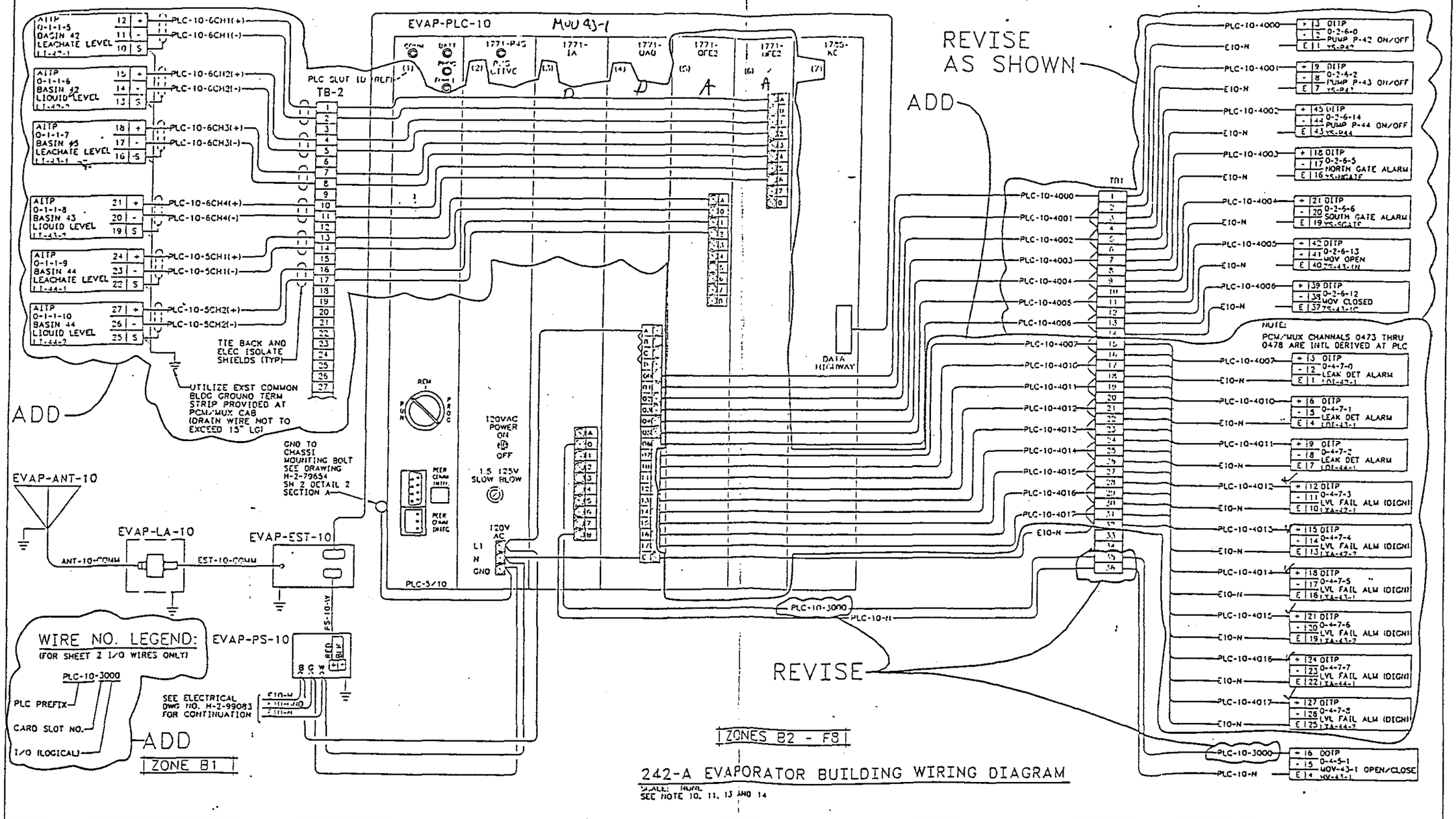

242-A EVAPORATOR BUILDING WIRING DIAGRAM

SCALE: NONE
SEE NOTE 10, 11, 13 AND 14

1W105172R.DWG KEH-0159.00 (1/88) ACAD

KAISER ENGINEERS HANFORD	ENGINEERING CHANGE NOTICE SKETCH					
Ref. Dwg.	Sh.	Rev.	Prepared By	Checked By	ECN No.	Page
H-2-79649	1	0	C.M.NICKOLAUS	GS Carpenter	W-105-172	22/22

ADD TO NEW SHEET 3

TABLE I

LEACHATE LE-*-1 INSTALLATION OFFSET AND Hc VERSUS AMBIENT TEMPERATURE (Ta).

Ta (°F)	(REF DETAIL 2) OFFSET (ft)	Hc (ft)
0	0.00	0.25
20	0.11	0.24
30	0.16	0.24
40	0.22	0.24
50	0.27	0.23
60	0.33	0.23
70	0.38	0.23
80	0.43	0.22

Hc REF TO EL 576.6'. Hc AND OFFSET CAN BE INTERPOLATED FOR DIFFERENT Ta.

TABLE II

BASIN LE-*-2 INSTALLATION OFFSET. AND Hc VERSUS AMBIENT TEMPERATURE (Ta).

Ta (°F)	(REF DETAIL 6) OFFSET (ft)	Hc (ft)
-10	0.0	
0	0.09	
20	0.27	
30	0.36	0.57
40	0.46	0.54
50	0.55	0.51
60	0.64	0.47
70	0.73	0.44
80	0.82	0.40
90	0.91	0.37
120	1.18	0.27
160	1.55	

Hc REF TO EL 578.3'. Hc AND OFFSET CAN BE INTERPOLATED FOR DIFFERENT Ta.